CCD-V500
RMT-500

SERVICE MANUAL

US Model
Canadian Model
E Model

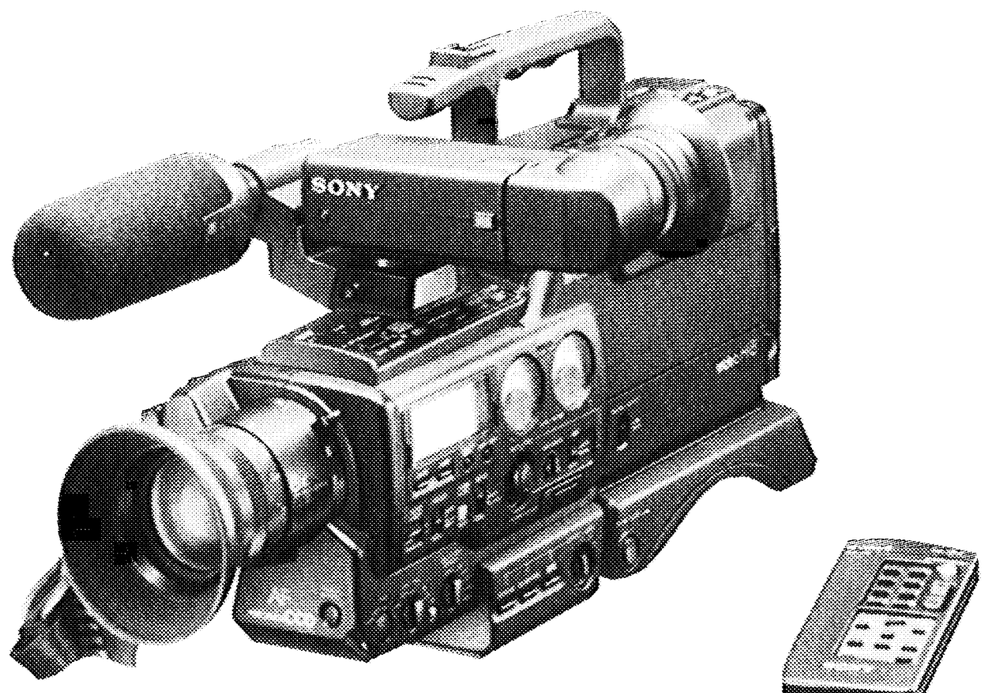

Hi8 PRO

U MECHANISM

For MECHANISM ADJUSTMENTS, refer to the "8 mm Video MECHANICAL ADJUSTMENT MANUAL Ⅲ" (9-972-732-11).

SPECIFICATIONS

System

Video recording system
Rotary two heads,
Helical scanning FM system
Audio recording system
Standard: Rotary head,
FM system
(2 channels)
PCM: PCM system (2 channels)
Video signal — NTSC color, EIA standards
Usable cassette — 8 mm video format cassette
Tape speed — SP: Approx. 1.43 cm/sec.
LP: Approx. 0.72 cm/sec.
(playback only)
Recording time — SP mode: 2 hours (E6/P6 – 120)
Playback time — SP mode: 2 hours
LP mode: 4 hours (E6/P6 – 120)
Fast forward/rewind time
Approx. 7 min. (E6/P6 – 120)
Image device — CCD (Charge Coupled Device)
Viewfinder — Electronic viewfinder
(black and white)
Lens — Combined 8 × power zoom lens
f = 11 – 88 mm, F1.4 with macro
Filter diameter: 52 mm
Auto focus system — TTL
Color temperature — Auto: One push white balance
INDOOR 3,200 K
OUTDOOR 5,800 K

Minimum illumination — 2 lux (F1.4)
Illumination range — 2 lux – 100,000 lux
(0.2 – 9,294 footcandles)
Recommended illumination
More than 100 lux
(9.3 footcandles)
Aperture correction — Automatic, manual (variable)

PCM

Sampling frequency — 31.5 kHz
Audio frequency — 20 Hz – 15 kHz
Dynamic range — More than 85 dB
Wow and flutter — Less than 0.005% RMS

Input and output connector

Video output — Phono jack, 1 Vp-p, 75 ohms unbalanced, sync negative

— Continued on next page —

- **SERVICE OF REMOTE COMMANDER RMT-500**

Remote commander RMT-500 is available as a unit. But as individual parts the battery case lid of commander is only avaiable.

MICROFILM

8 VIDEO CAMERA RECORDER

SONY®

S video output	4-pin mini-DIN Luminance signal: 1 Vp-p, 75 ohms, unbalanced, sync negative Chrominance signal: 0.286 Vp-p, 75 ohms, unbalanced
Audio output	Phonos jacks (3: stereo L, R and monaural), −7.5 dBs, at output impedance less than 2.2 kilohms
RFU DC OUT	Special minijack, 5V DC
Video input	Phono jack (1), 1 Vp-p, 75 ohms, unbalanced, sync negative
S video input	4-pin mini-DIN Luminance signal: 1 Vp-p, 75 ohms, unbalanced, sync negative Chrominance signal: 0.286 Vp-p, 75 ohms, unbalanced
Audio input	Phono jacks (2: stereo L and R), −7.5 dBs, input impedance more than 47 kilohms
Headphones jack	Stereo minijack, 8-ohm impedance
Remote jack	Stereo mini-minijack
Microphone jacks	External microphone jacks: phone jack, −66 dBs low impedance External narration microphone jack: minijack, −66 dBs low impedance

General

Power requirements	Battery compartment 6.0 V (battery pack)/7.5 V (AC power adaptor)
Power consumption	12 W (camera recording, DIGITAL EFFECT switch "ON") including the viewfinder
Installation	Vertically, horizontally
Operating temperature	0°C to 40°C (32°F to 104°F)
Storage temperature	−20°C to +60°C (−4°F to +140°F)
Dimensions	Approx. 190 × 235 × 430 mm (w/h/d) ($7\frac{1}{2} \times 9\frac{3}{8} \times 17$ in.) Including the lens hood
Weight	Approx. 3 kg (6 lbs 10 oz) excluding the battery and cassette
Microphone	Electret condenser microphone × 2 uni-directional stereo type
Narration microphone	Electret condenser microphone, non-directional monaural type
Accessories supplied	• Wireless Remote Commander (1) • Size AA batteries (IEC designation R6) (2) • Stereo earphone (1) • Battery pack NP-77H (1) • AC power adaptor AC-V50 (1) • Lithium battery CR2025 (1) • Cassette tape (1) • Shoulder strap (1) • Jack covers (1 set) • Lens cap (1) • Card cleaner (1) • RFU adaptor RFU-90UC (1) • A/V connecting cord (3 phono to 3 phono) (1) • Video cable with S video connectors (4-pin mini-DIN to 4-pin mini-DIN) (1)

Design and specifications are subject to change without notice.

SAFETY CHECK-OUT

After correcting the original service problem, perform the following safety checks before releasing the set to the customer:

1. Check the area of your repair for unsoldered or poorly-soldered connections. Check the entire board surface for solder splashes and bridges.
2. Check the interboard wiring to ensure that no wires are "pinched" or contact high-wattage resistors.
3. Look for unauthorized replacement parts, particularly transistors, that were installed during a previous repair. Point them out to the customer and recommend their replacement.
4. Look for parts which, though functioning, show obvious signs of deterioration. Point them out to the customer and recommend their replacement.
5. Check the B+ voltage to see it is at the values specified.

SAFETY-RELATED COMPONENT WARNING!!

COMPONENTS IDENTIFIED BY MARK ⚠ OR DOTTED LINE WITH MARK ⚠ ON THE SCHEMATIC DIAGRAMS AND IN THE PARTS LIST ARE CRITICAL TO SAFE OPERATION. REPLACE THESE COMPONENTS WITH SONY PARTS WHOSE PART NUMBERS APPEAR AS SHOWN IN THIS MANUAL OR IN SUPPLEMENTS PUBLISHED BY SONY.

ATTENTION AU COMPOSANT AYANT RAPPORT À LA SÉCURITÉ!

LES COMPOSANTS IDENTIFIÉS PAR UNE MARQUE ⚠ SUR LES DIAGRAMMES SCHÉMATIQUES ET LA LISTE DES PIÈCES SONT CRITIQUES POUR LA SÉCURITÉ DE FONCTIONNEMENT. NE REMPLACER CES COMPOSANTS QUE PAR DES PIÈCES SONY DONT LES NUMÉROS SONT DONNÉS DANS CE MANUEL OU DANS LES SUPPLÉMENTS PUBLIÉS PAR SONY.

TABLE OF CONTENTS

Section	Title	Page
	SERVICE NOTE	
	Semiconductor Location	6
	Service Mode	6
	Check for Head Clogs and Remedy	7
1.	GENERAL	
	Technical Information	8
	Location and Function of Parts and Controls	9
	Attaching the Viewfinder and the Shoulder Strap	13
	Connecting the Power Sources	13
	Inserting a Cassette	15
	Adjustment of the Viewfinder Lens	16
	Selection of the Automatic and Manual Adjustments	16
	Easy Camera Recording with Automatic Adjustment	17
	Audio Recording	19
	Recording Level Adjustment	21
	To Mark Index Signals during Recording	21
	Recording Date or Time	22
	Fade-in and Fade-out	23
	Interval Recording	23
	Frame Recording	24
	Editsearch	24
	Recording a Title	25
	Viewing Digital Picture	27
	To Mark Index Signals during Playback	31
	Insert Recording	33
	Use of the Tape Counter	33
	Trouble Indications	34
2.	DISASSEMBLY	
2-1.	Removal of Cabinet (Lower) Assembly	35
2-2.	Removal of Cassette LID Assembly	35
2-3.	Removal of Cabinet (Rear) Assembly	35
2-4.	Removal of Cabinet (Upper) Assembly	36
2-5.	Removal of Cabinet (L) Assembly	36
2-6.	Removal of Camera Block Assembly and VTR Block Assembly	37
2-7.	Removal of Cabinet Frame Assembly (DC-DC Converter Unit)	38
2-8.	Opening of AS-22 Board	38
2-9.	Opening of PC-35 Board	38
2-10.	Opening of VI-66 Board	38
2-11.	Removal of SS-95 Board	39
2-12.	Opening of MR-19 Board	39
2-13.	Removal of DC-DC Converter Unit (Camera)	39
2-14.	Opening VC-55 Board	40
2-15.	Removal of VC-54 and VC-55 Boards	40
2-16.	Removal of CD-13 Board (Removal of CCD Imager)	41
2-17.	Removal AF-DM Assembly	41
2-18.	Removal of B/W Cathode-ray Tube (EVF Assembly)	42
2-19.	Internal View	43

Section	Title	Page
3.	DIAGRAMS	
3-1.	Circuit Boards Location	44
3-2.	Overall Block Diagram	45
3-3.	Camera Block Diagram	50
3-4.	Auto Focus Block Diagram	55
3-5.	Digital Titler Block Diagram	58
3-6.	Video (1) Block Diagram	61
3-7.	Video (2) Block Diagram	66
3-8.	Digital Picture Block Diagram	69
3-9.	Servo Block Diagram	72
3-10.	System Control Block Diagram	75
3-11.	System Control Interface	79
3-11-1.	Servo/System Control IC Pin Functions	79
3-11-2.	Mode Control IC Pin Function	81
3-12.	PCM Audio Block Diagram	83
3-13.	AFM Audio Block Diagram	88
3-14.	View Finder Block Diagram	91
3-15.	Power Block Diagram	94
4.	PRINTED WIRING BOARDS AND SCHEMATIC DIAGRAMS	
4-1.	Frame Schematic Diagram	97
4-2.	Printed Wiring Boards and Schematic Diagrams	102
	• VC-54, VC-55 Boards	102
	• AF-47, DM-23 Boards	111
	• MR-19 Board	120
	• VI-66 Board	128
	• PJ-22 Board	150
	• DI-21 Board	156
	• SS-95 (Servo), CC-27, FP-80, FP-90 Boards	164
	• SS-95 (System Control, Titler), LI-12 Boards	174
	• PC-35, MJ-23, HJ-5, IR-20, LL-1, LR-11 Boards	183
	• AS-22 Board	193
	• FD-13, CK-18, DK-3, SW-113, VK-2, IR-20 Boards	201
	• VF-13, TL-18, TL-19 Boards	208
	• FU-70, DC-25, VJ-6 Boards	213
	• DT-73 Board	217
	• MX-7 Board	219
	• CP-20 Board	221
	• HR-3 Board	223
	• HD-8 Board	225
4-3.	Semiconductors	227

Section Title Page

5. EXPLODED VIEWS

5-1. Cabinet (Left) Assembly ····· 229
5-2. Cabinet (Right) and Cabinet Frame Assemblies ····· 231
5-3. Cabinet (Upper) Assembly ····· 232
5-4. Main PC Board and Cabinet (Rear) Assemblies ····· 233
5-5. Mechanism Chassis Assembly (1) ····· 234
5-6. Mechanism Chassis Assembly (2) ····· 235
5-7. Mechanism Chassis Assembly (3) ····· 236
5-8. Camera Assembly ····· 237
5-9. EVF Assembly ····· 238

6. ELECTRICAL PARTS LIST ····· 239

HARDWARE LIST ····· 287

7. CAMERA BLOCK ADJUSTMENTS

7-1. Pre-adjustment Preparations (Camera Block) ····· 288
7-1-1. List of Servicing Jigs ····· 288
7-1-2. Preparations ····· 289
7-1-3. Precautions ····· 290
7-1-4. Adjustment Remote Controller ····· 291
7-1-5. Check Point Array ····· 295
7-1-6. AF Microcomputer Data Reading Jig ····· 296
7-1-7. Data Processing ····· 296
7-2. Camera System Adjustment ····· 297
7-2-1. Flange Back Adjustment ····· 297
7-2-2. Power Supply Check (DC-DC Converter) ····· 298
7-2-3. EVR Initial Settings ····· 298
7-2-4. V SUB Adjustment (VC-55 Board) ····· 299
7-2-5. Hall Adjustment (DM-23 Board) ····· 299
7-2-6. Iris Adjustment (VC-55 Board) ····· 300
7-2-7. Iris In/Out Adjustment (AF-47 Board) ····· 300
7-2-8. AGC Adjustment (VC-55 Board) ····· 300
7-2-9. Y Signal Matrix Adjustment (VC-55 Board) ····· 301
7-2-10. Chroma Signal Matrix Adjustment (1) (VC-55 Board) ····· 301
7-2-11. Chroma Signal Matrix Adjustment (2) (VC-55 Board) ····· 302
7-2-12. YH Level Adjustment (VC-55 Board) ····· 302
7-2-13. Chroma Level Adjustment (VC-55 Board) ····· 303
7-2-14. Sync Level Adjustment (VC-55 Board) ····· 303
7-2-15. Setup Adjustment (VC-55 Board) ····· 303
7-2-16. White Clip Adjustment (VC-55 Board) ····· 304
7-2-17. Y Level Adjustment (VC-55 Board) ····· 304
7-2-18. Aperture Adjustment (VC-55 Board) ····· 305
7-2-19. Max. Gain Adjustment (VC-55 Board) ····· 305
7-2-20. Burst Level Adjustment (VC-55 Board) ····· 305
7-2-21. Pre-white Balance Adjustment (Method Using Vectorscope) ····· 306
7-2-22. Pre-white Balance Adjustment (Method Using Oscilloscope) (VC-55 Board) ····· 306
7-2-23. Color Reproduction Adjustment (Method Using Vectorscope) ····· 307
7-2-24. Color Reproduction Adjustment (Method using oscilloscope) ····· 307
7-2-25. Auto White Balance Adjustments ····· 308
7-2-26. Outdoor White Balance Confirmation (VC-55 Board) ····· 310
7-2-27. Focus Motor Speed Adjustment (VC-55 Board) ····· 310
7-2-28. Macro Area Adjustment (AF-47 Board) ····· 310
7-2-29. Auto-Focus LLA Adjustment (AF-47 Board) ····· 311
7-2-30. Auto Focus Adjustment ····· 311
7-2-31. Auto Focus Confirmation ····· 313
7-3. Digital Titler System Adjustment ····· 313
7-3-1. Titler PLL Adjustment (SS-95 Board) ····· 313
7-3-2. Title A/D Level Adjustment ····· 313
7-3-3. Title Pedestal Adjustment (VC-55 Board) ····· 314
7-3-4. Title Y Level Adjustment (VC-55 Board) ····· 314
7-4. Electronic Viewfinder System Adjustment ····· 315
7-4-1. Horizontal Tilt Adjustment ····· 315
7-4-2. Centering Adjustment ····· 315
7-4-3. AFC Adjustment (VF-13 Board) ····· 315
7-4-4. Horizontal Amplitude Adjustment (VF-13 Board) ····· 316
7-4-5. Vertical Amplitude Adjustment (VF-13 Board) ····· 316
7-4-6. Brightness and Contrast Adjustment (VF-13 Board) ····· 316
7-4-7. Focus Adjustment ····· 316
7-5. Arrangement Diagram for Adjustment Parts ····· 318

8. MECHANICAL ADJUSTMENTS

Refer to the separate "8 mm Video Mechanical Adjustment Manual III U Mechanism" for adjustment and checking of the mechanism block and for replacement of mechanical parts.

8-1. Track Shift Mode Setting ····· 323
8-2. Preparation for Adjustment ····· 323

Section	Title	Page

9. VIDEO BLOCK ADJUSTMENTS

9-1. Pre-adjustment Preparations 324
9-1-1. Required Equipment 324
9-1-2. Precautions 324
9-1-3. Connection of Equipment 325
9-1-4. Input Signal Check 326
9-1-5. Alignment Tape 327
9-1-6. I/O Level Impedance 328
9-1-7. Recording Mode (E Mode/L Mode) Selection 328
9-1-8. Service Modes 328
9-1-9. Test Modes 330
9-2. Power Supply Checks 330
9-2-1. Power Supply Voltage Check (DC-DC converter 1) 330
9-2-2. Power Supply Voltage Check (DC-DC converter 2) 330
9-3. System Control System Adjustments 331
9-3-1. Clock Precision Adjustment (SS-95 Board) 331
9-3-2. Battery Down Adjustment (SS-95 Board) 331
9-3-3. Battery Down Confirmation 331
9-4. Servo System Adjustments 332
9-4-1. PWM Oscillating Frequency Adjustment (SS-95 Board) 332
9-4-2. Capstan FG Adjustment (SS-95 Board) 332
9-4-3. Switching Position Adjustment (SS-95 Board) 332
9-5. Video System Adjustment 333
9-5-1. Playback Frequency Characteristics Adjustment (MR-19 Board) 333
9-5-2. Flying Erase Check (MR-19 Board) 334
9-5-3. Crystal Oscillator f0 Checking (VI-66 Board) 334
9-5-4. Y/C Separation Adjustment (HD-8/VI-66 Board) 334
9-5-5. Y Comb Filter Adjustment (HD-8/VI-66 Board) 335
9-5-6. SYNC AGC and Loop Gain Adjustment 335
9-5-7. VIDEO OUT Level Adjustment (VI-66 BOard) 335
9-5-8. PB Emphasis Adjustment (VI-66 Board) 336
9-5-9. L Mode PB Y Level Adjustment (VI-66 Board) 336
9-5-10. E Mode PB Y Level Adjustment (VI-66 Board) 336
9-5-11. L Mode Y FM Carrier Frequency and Y FM Deviation Adjustment 337
9-5-12. E Mode Y FM Carrier and Y FM Deviation Adjustment 338
9-5-13. 378 fH VCO Adjustment (VI-66 Board) 338
9-5-14. Chroma Emphasis Adjustment (VI-66 Board) 339
9-5-15. Carrier Balance Adjustment (VI-66 Board) 339
9-5-16. Recording Current Adjustment 340
9-5-17. VIDEO OUT Level Adjustment (PJ-22 Board) 342
9-5-18. Y OUT Level Adjustment (PJ-22 Board) 342
9-5-19. C OUT Level Adjustment (PJ-22 Board) 343
9-5-20. Character Generator f0 Adjustment (VI-66 Board) 343
9-5-21. DDS Character Position Adjustment (VI-66 Board) 343
9-6. Digital Picture System Adjustment 344
9-6-1. AFC Adjustment (DI-21 Board) 344
9-6-2. APC Adjustment (DI-21 Board) 344
9-6-3. V-PLL Adjustment (DI-21 Board) 344
9-6-4. D/A SYNC Level Adjustment (DI-21 Board) 345
9-6-5. A/D White Level Adjustment (DI-21 Board) 345
9-7. Audio System Adjustment 345
9-7-1. PCM Audio System Adjustment 345
9-7-2. AFM Audio System Adjustment 349
9-8. Arrangement Diagram for Adjustment Parts 354

There is the color reproduction standard frame at the back of the book.

SERVICE NOTE

[SEMICONDUCTOR LOCATION]

In this service manual, the mounted locations of the semiconductors (IC, transistor, diodes) are indicated in red sa shown below. This enables to find the location on the board easily when servicing.

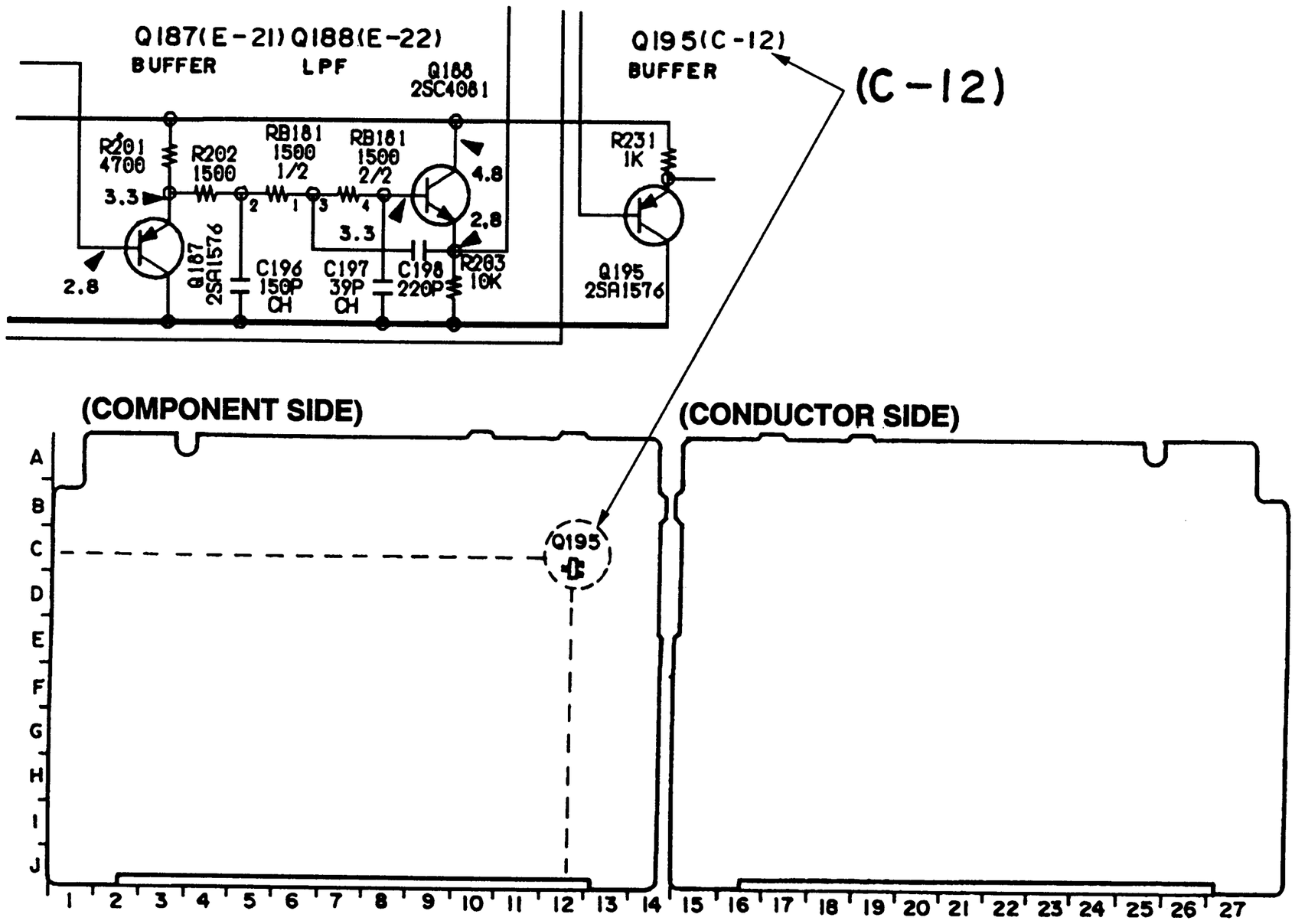

[SERVICE MODE]

In this instrument service mode is provided in orders to know the set satus and for the electric adjustment of camera.
This operation in made by full adjustment remote controller (J-6082-053-A).

- For adjustment of EVR (Electronic Variable Resistor) of camera.
  .....SDJUST MODE → Refer to page 291.
  (7-1-4. Adjustment Remote Controller)
- For checking the set status
  .....STATUS INDICATION MODE
  (STATUS MODE) → Refer toPAGE 328.
  (9-1-8. Service Mode)

[CHECK FOR HEAD CLOGS AND REMEDY]

After an extended period of use the video image may become indistinct or may not appear at all during playback of a tape. The cause of this usually are dirty video heads. For remedy, cleaning of the heads is required.

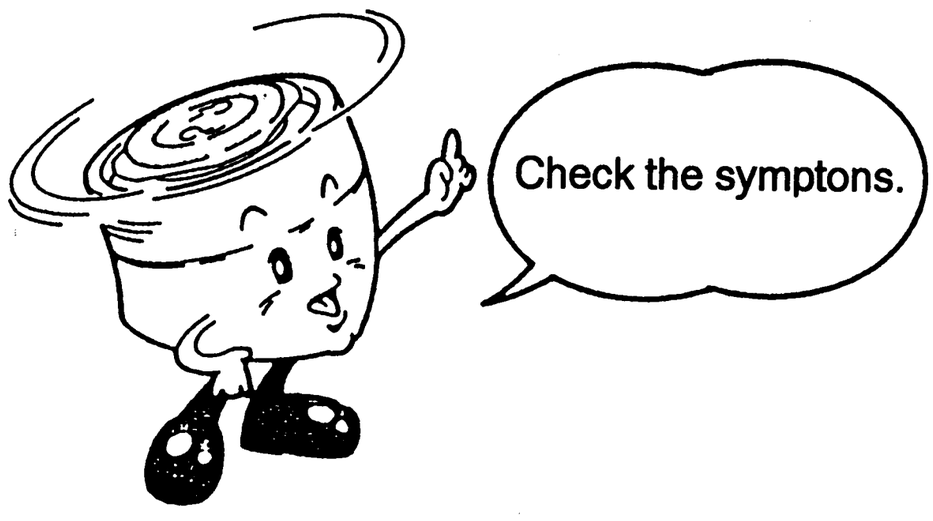

Check for Head Clogs During Recording

① Use a blank tape, record a short section, then press the stop button to stop.
② Set to recording mode again.
③ If the [⊗] mark is flashing in the viewfinder at this time, head clogs are occurred.

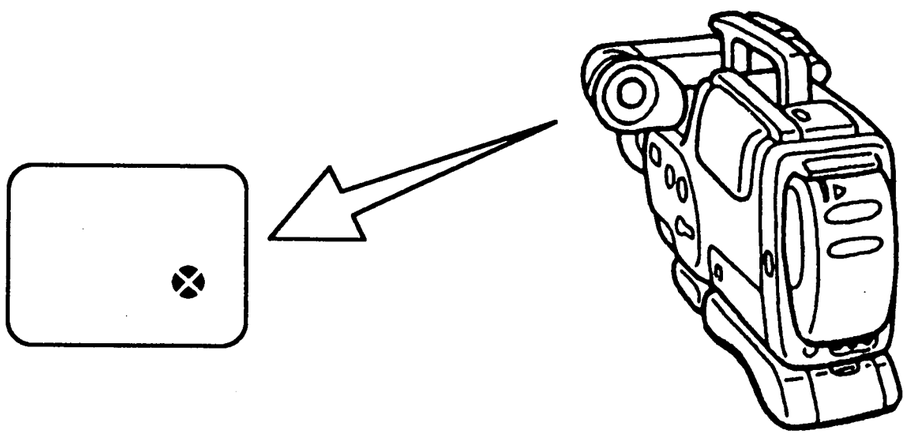

Check During Playback of a Tape

① Play back a pre-recorded tape and display the image on a TV screen.
② If there is no sound and the image is unstable, no image appears on the screen, or tape transport is unstable, head clogs are occurred.

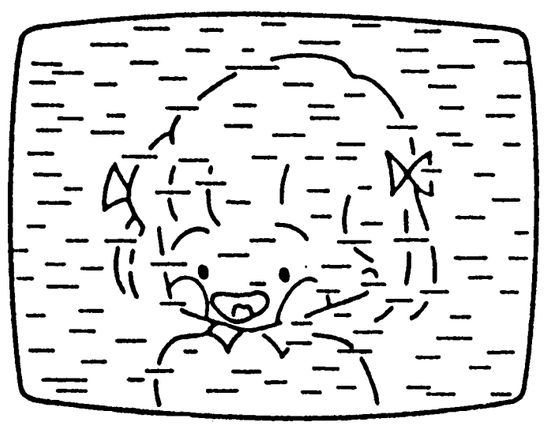

The state the image flickers by niose on the screen.

Remedy

[Cleaning method using a cleaning tape]

- Use the Cleaning Tape for Hi8. (Please follow the instructions attached to the cleaning tape.)

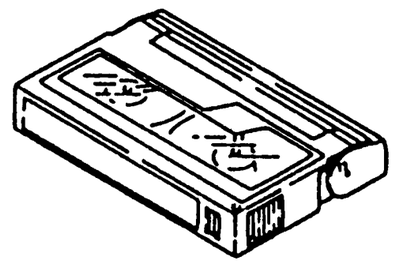

SECTION 1
GENERAL

This section is extracted from instruction manual.

Technical Information

Hi8 (High Eight) Video System

The 8 mm video system employs a metal powder tape. This means the video camera recorder is capable of recording a large amount of information and enhances picture quality. Taking advantage of the 8 mm video system, the Hi8 video system has been developed. The main characteristics of the Hi8 video system are as follows:

Super High Quality Picture

The information capacity is a key element for picture improvement. It can be increased by shifting up the FM carrier frequency range. In the Hi8 video system, the FM carrier frequency range of the luminance signal is shifted up to 5.7–7.7 MHz. This is higher than the 4.2–5.4 MHz range of the standard 8 mm video system. Thanks to this, the horizontal resolution is improved to more than 400 lines.

Frequency allocation of the standard 8 mm video system

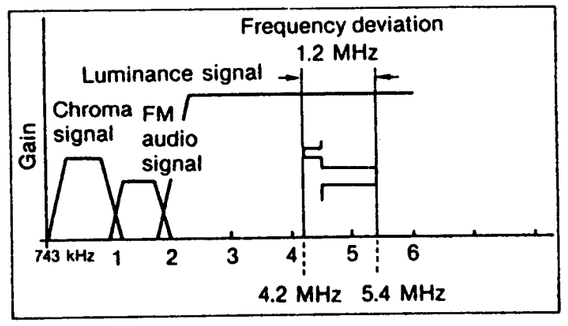

Frequency allocation of the Hi8 video system

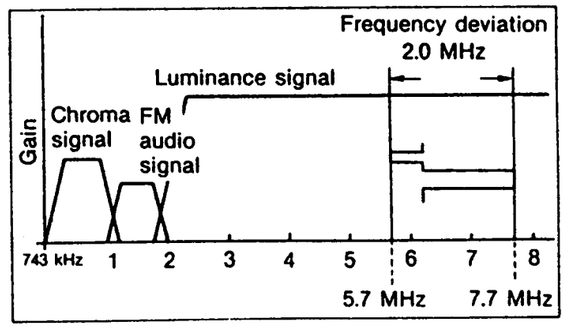

Technical Information

Compatibility with Conventional Video Camera Recorders

A high-quality picture can be recorded and played back on a tape for the Hi8 video system.

Recording with this unit

Hi8 tape

Hi8 mode switch to AUTO	➡ Tape recorded in the Hi8 video system
Hi8 mode switch to OFF	➡ Tape recorded in the standard 8mm video system

Standard 8 mm tape

Regardless of the position of the Hi8 mode switch	➡ The recorded in the standard 8mm video system

Playback with this unit

Tape recorded in the Hi8 video system
Tape recorded in the standard 8 mm video system
➡ The recording mode is selected automatically

- A tape recorded in the Hi8 video system cannot be played back with an conventional 8mm video camera recorder.
- A standard 8mm tape cannot be recorded in the Hi8 video system.
- A tape for the Hi8 video system cannot be recorded and played back in the Hi8 video system with a conventional video camera recorder.
- The recording tape speeds in the Hi8 video system are compatible with the conventional 8 mm format.
  Recording/playback time is 2 hours using a E6-120/P6-120 tape or the equivalent.

Cassette used	With this unit		
	Recording		Playback
	Hi8	Normal	
Standard 8 mm tape	No	Yes	Yes
Hi8 tape	Yes	Yes	Yes

Technical Information

Hi-Fi Stereo System

On the 8mm video standard track the sound is recorded/played back in AFM hi-fi monaural. The PCM digital stereo sound is recorded/played back on the PCM track as an option.
On this unit, in addition to PCM digital stereo sound, the AFM hi-fi stereo sound can be recorded on the standard track.
To maintain compatibility with the conventional AFM hi-fi monaural sound, the AFM hi-fi stereo sound is recorded as the L–R sound using the 1.7 MHz carrier and the L+R sound using the 1.5 MHz carrier as the FM audio signal.
To play back the tape recorded by its hi-fi stereo system, this unit uses a matrix circuit to produce the L and R stereo sounds separately.
When a conventional AFM hi-fi monaural system model is used to play back a tape recorded in AFM hi-fi stereo, it will produce the L+R monaural sound because the monaural model can reproduce only the 1.5 MHz carrier.
The AFM hi-fi stereo system of this unit allows you to enjoy a live stereo sound atmosphere even with the standard track.

Frequency allocation of the hi-fi stereo system

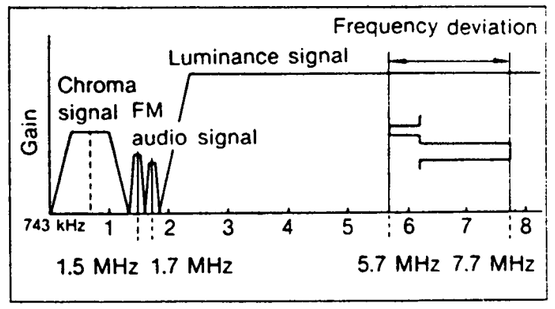

Compatibility with conventional 8mm video format
When you play back an AFM stereo hi-fi recorded tape with a conventional 8 mm video equipment, a sound is reproduced in monaural.

Technical Information

TBC (Time Base Corrector)

During playback, the TBC is automatically turned on to reduce jitter and further enhance the high quality of the picture recorded in the Hi8 video system.

On Jitter
A signal recorded on the tape is demodulated to its original video signal through the rotating magnetic head. During this process, time base fluctuations due to uneven rotation of the head and varying tape running speed are added to the demodulated video signal. These time base fluctuations that occur with video equipment are called jitter. As long as the monitor can scan the fluctuation, no effect is produced on the image. However, when the jitter exceeds a certain limit, the image becomes unstable and a swaying motion or bend is produced on the monitor. For the Hi8 video system, particularly with its more than 400 lines of horizontal resolution and precise reproduction of the fine vertical lines, eliminating jitter will contribute greatly to further enhancing the picture quality.

Basic Principles of TBC
The write clock based on the synchronized signal (H, V) separated from the video signal temporarily writes the video signal with jitter to the field memory which the digital TBC uses. The stable read clock reads the signal data one by one in the order in which they were written in memory, and produces the video signal output without the jitter.
When you repeat editing over and over, jitter accumulates and might corrupt the synchronized signal, thus causing the image to bend. The digital TBC with its field memory produces the synchronized signal output separately from the video signal after rewriting it into a stable one. Therefore, if you use this unit as the playback machine during editing for the purpose of reducing jitter, it will be effective in removing the image bend that occurs due to corruption of the synchronized signal. The TBC also reduces jitter caused by incompatibility (jitter which occurs when the recording machine and playback machine are of a different make). This unit is therefore highly suitable for use as the master unit.

Location and Function of Parts and Controls

A-1

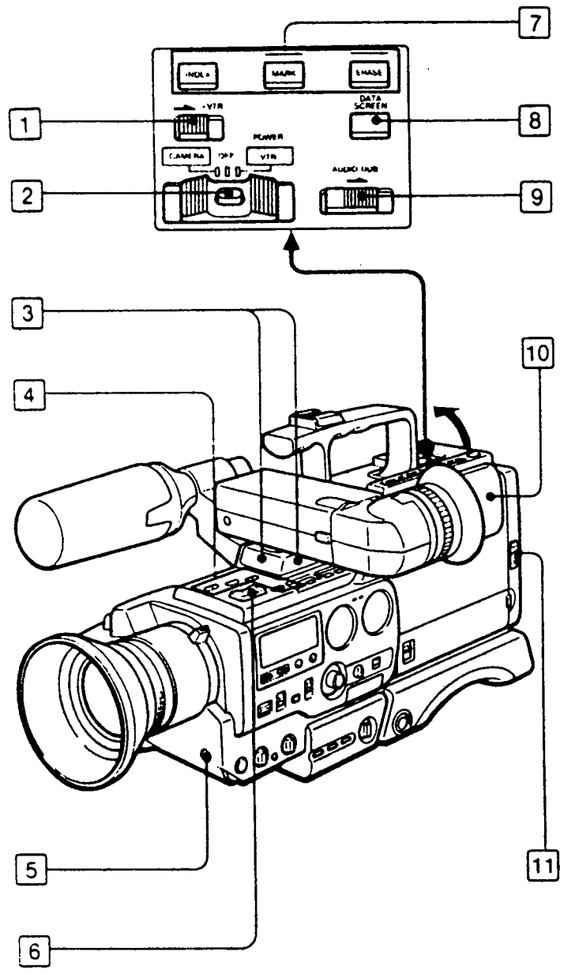

For details on the use of each control, refer to the pages indicated in the circle.

A-1

1 **+ VTR switch** ⑫, ⑯
During recording, to operate the buttons for the VCR, slide in the direction of the arrow.

2 **POWER switch**
CAMERA: For camera recording
VTR: For playing back or editing tapes
OFF: Power off

3 **Remote control detector** ㊱

4 **Digital picture buttons** ⑮
Press to make the digital pictures.
DIGITAL ZOOM button
P in S button
FADER/OVERLAP button
PICTURE button

5 **INDEX MARK button** ㊳
Press to mark the index signal **during recording.**

6 **EDITSEARCH button** ⑦2, ⑦6, ⑫2

7 **INDEX buttons** ⑱
INDEX: Press to search the index signal marked.
MARK: Press to mark the index signal.
ERASE: Press to clear the index signal.

8 **DATA SCREEN button** ⑯
Press to display the indication on the viewfinder screen on the TV.

9 **AUDIO DUB (dubbing) button** ⑱
Slide to dub the audio signals.

10 **Speaker** ⑦4
During recording or playback, the monaural sound will be monitored.

11 **BATT (battery eject) knob** ㊷

A-2

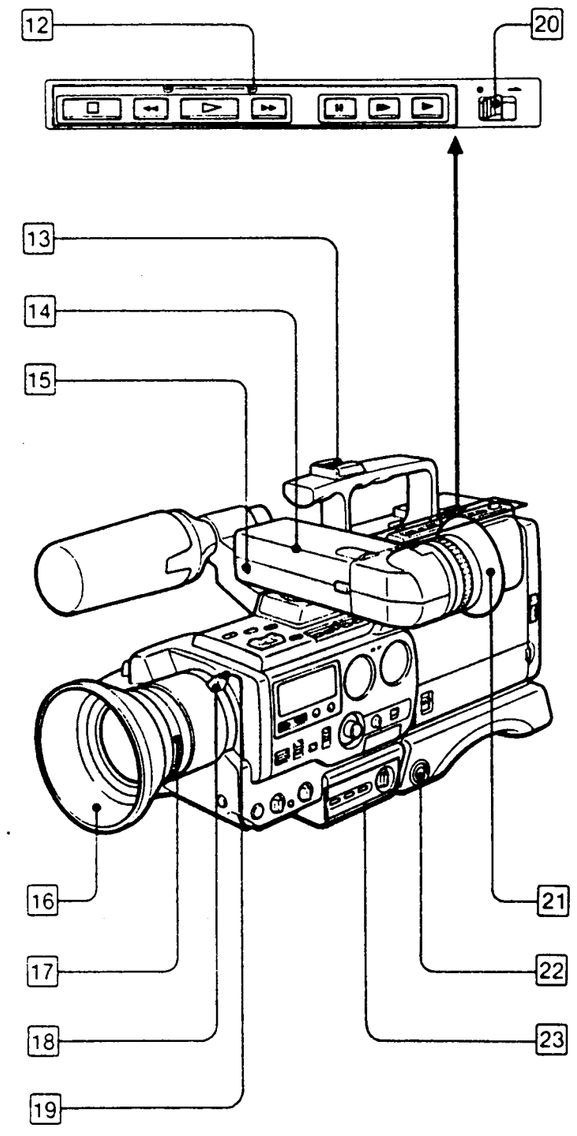

A-2

12 **Tape transport buttons**
□ (stop), ◀◀ REW (rewind), ▷ (playback),
▶▶ FF (fast forward), ❚❚ (pause),
❚❚▶ FRAME (frame-by-frame playback),
❚▶ SLOW (slow speed playback)

13 **Accessory shoe**
Attach a video light, etc.

14 **Viewfinder**
The picture being recorded or played back can be monitored in monochrome here. Also, data such as caution indicators and function mode are displayed on the viewfinder screen.

15 **Camera recording/battery/tape end lamp**
Lights during camera recording. It blinks when the battery is exhausted or the tape is at its end.

16 **Lens hood**

17 **Focus ring** ㊷

18 **Zoom lever** ⑩

19 **Macro set button** ⑩

20 **● REC (recording) switch**
Slide in the direction of the arrow.

21 **Eyecup**

22 **PUSH SLIDE button** ㊹
While pressing this button, adjust the position of the shoulder mount.

23 **Digital picture buttons** ⑮
Press to make the digital pictures.
STROBE button
SOLARIZATION button
NR (noise reduction) button
EFFECT LEVEL control

A-3

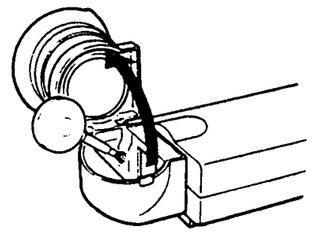

A-3

To remove dust from inside the viewfinder
Open the eyecup and remove the dust with a blower.

Location and Function of Parts and Controls

A-4

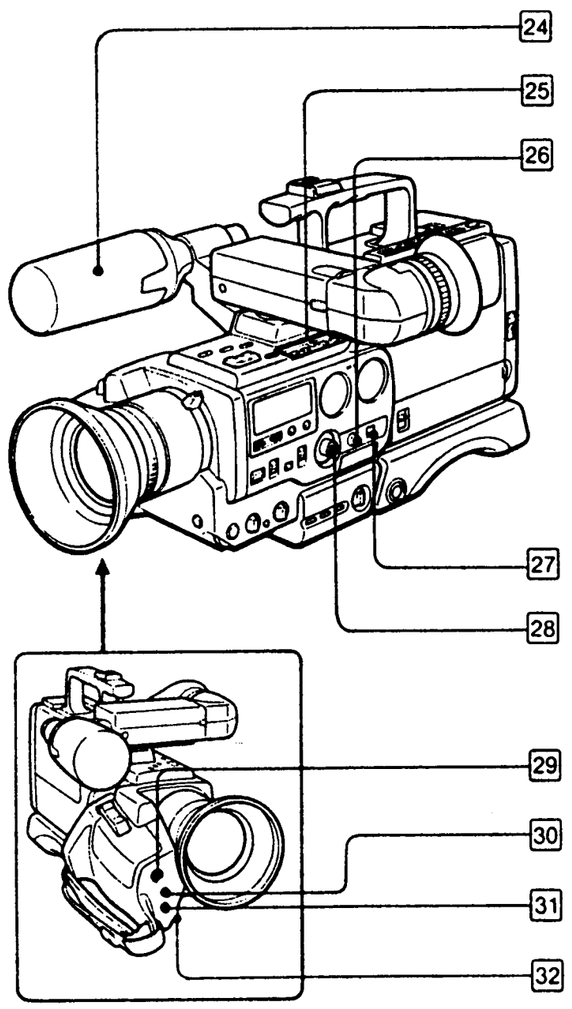

A-4

24 One point stereo microphone
Select the appropriate function according to the shooting conditions.

25 SUPERIMPOSE buttons (16)
Used to record the title.
TITLE 1 button
TITLE 2 button
MEMORY button
COLOR/MODE button

26 BALANCE control (45)
The left/right channel balance of the microphone or input signal from the AUDIO INPUT jack can be adjusted.

27 MIC switch (45), (48)
AUTO: Normally set to this position.
MANU: Set to adjust the volume or left/right channel balance of the microphone or input signal from the AUDIO INPUT jack.

28 REC LEVEL control (45)
The volume of the microphone or input signal from the AUDIO INPUT jack can be adjusted.
Normally set to the green position.

29 START/STOP button (65)
Used for low position recording.

30 NAR. MIC (narration microphone) jack (mini jack) (54)
Connect an external narration microphone.

31 PHONES jack (stereo mini jack) (53)
Connect the supplied earphone.

32 PHONE LEVEL control (72)
During playback, the sound level of the speaker or connected ear receiver can be adjusted.

Location and Function of Parts and Controls

A-5

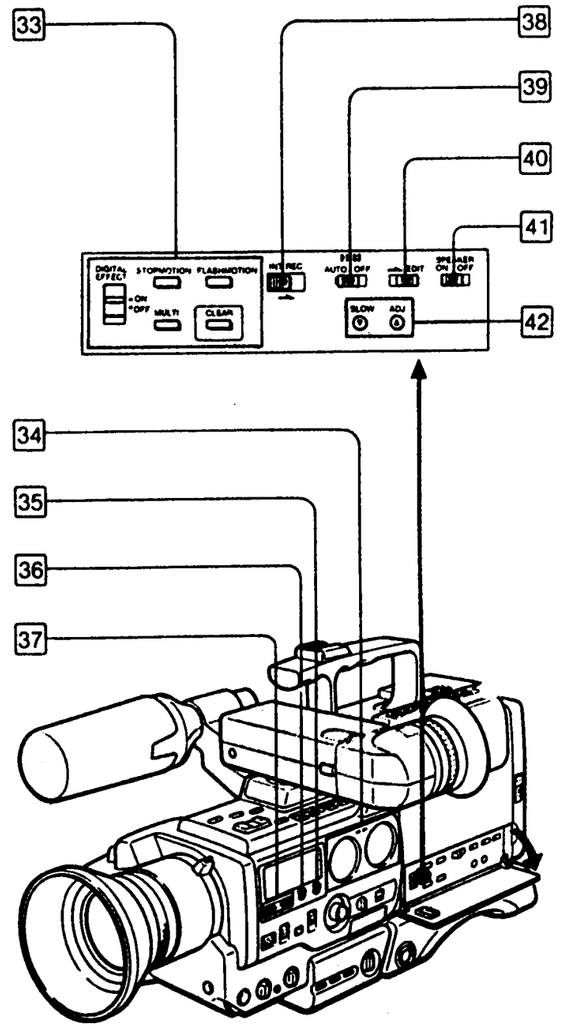

A-5

33 Digital picture buttons (18)
Press to make the digital pictures.
DIGITAL EFFECT switch
STOPMOTION button
FLASHMOTION button
MULTI button
CLEAR button

34 LEVEL METERs and indicator (46)

35 ZERO MEM (zero memory) button (16)
Used to memorize the counter zero point.

36 COUNTER RESET button (16)
Press to reset the counter to zero.

37 DATE and TIME buttons (17)
Press to display or turn off the date or time.

38 INT. REC (interval recording) button (18)
Slide to activate the automatic interval recording function.
The picture can be recorded for approximately one second every one minute.

39 Hi8 (high eight) mode switch (66)
When set to the AUTO (green mark) position, the recording mode will be selected automatically according to the tape to be used.

40 EDIT switch (80)
Normally set it to the OFF position. When editing tapes, set in the direction of the arrow (ON).

41 SPEAKER switch (52)
During recording or playback, set to ON to monitor the sound.

42 SLOW ADJ (adjustment) buttons (63)

A-6

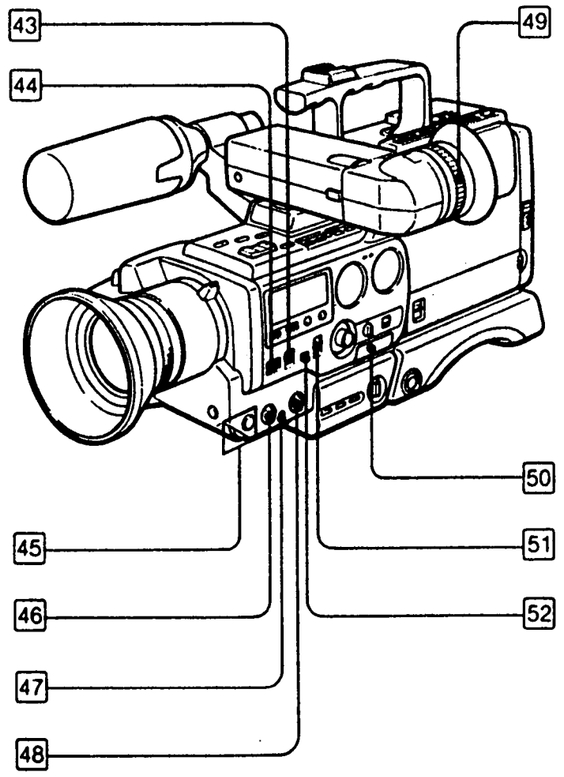

A-6

43 FOCUS switch (32)
Used for manual focusing.

44 AUTO LOCK switch (33, 46)
Normally set to the upper AUTO LOCK position (green mark).
To adjust the focus, white balance, iris, sensitivity or shutter speed manually, set to the lower position (white mark).

45 IRIS control (40)
Normally set to the center position (green mark).

46 WHT BAL (white balance) control (35)
Used for manual white balance adjustment.

47 (one push white balance) button (35)
Press to adjust the white balance presicely.

48 SHUTTER SPEED button (40)
Used to select the shutter speed.

49 Viewfinder lens adjustment ring (35)
Adjust to your eyesight to assure good focus. Be sure to adjust this ring when shooting for the first time.

50 NARRATION MIC button (32)
Press to record your narration. When the PUSH mark is pressed, the microphone will be out.

51 SENS (sensitivity) switch (40)
Set to HIGH or S-HIGH when the scene to be recorded is too dark.

52 PUSH AUTO button (34)
While recording with manual focusing, to set the unit into automatic focusing momentarily, press this button.

A-7

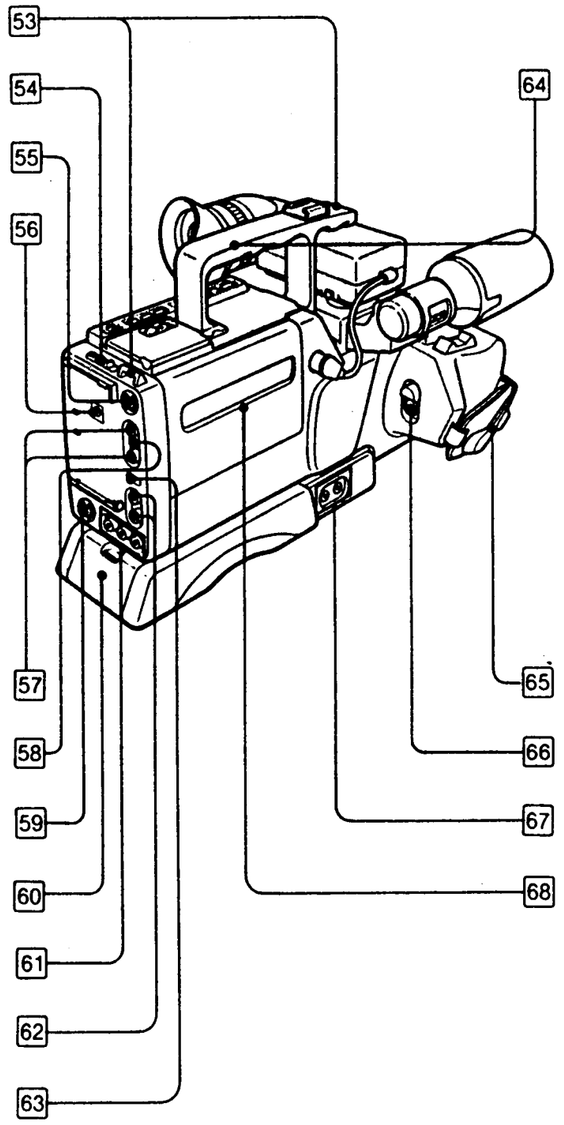

65

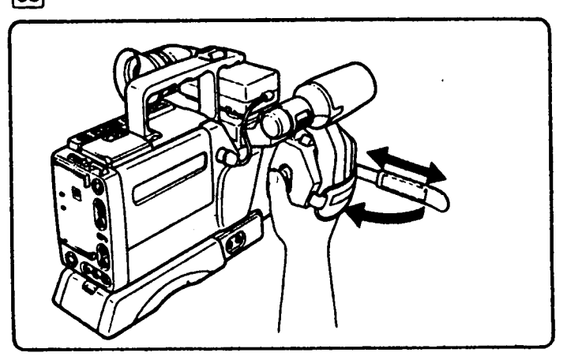

A-7

53 Hooks for shoulder strap (33)
Attach a shoulder strap.

54 EJECT (Cassette eject) button (34)

55 S VIDEO OUTPUT connector (4-pin mini-DIN) (34, 47)

56 DC IN connector

57 VIDEO/AUDIO OUT (output) jacks (phono jacks) (47)

58 RFU DC OUT (RFU adaptor DC output) jack (special minijack) (39, 47)
Supplies power to the RFU adaptor.

59 S VIDEO INPUT connector (4-pin mini-DIN) (47, 47)

60 Utility compartment
Insert the earphone, etc.

61 VIDEO/AUDIO INPUT jacks (phono jacks) (47, 47)

62 AUDIO OUTPUT jacks (phono jacks) (39, 47)

63 AUDIO MONITOR switch (47)
Selects the sound to be monitored during playback.

64 Carring handle

65 Grip strap
Adjust the length so that your thumb can easily manipulate the START/STOP button.

66 STANDBY switch (35)
Slide up to set the unit to recording pause mode.

67 MIC (external microphone) jacks (phone jacks) (32, 40)

68 Cassette holder

Location and Function of Parts and Controls

A-8

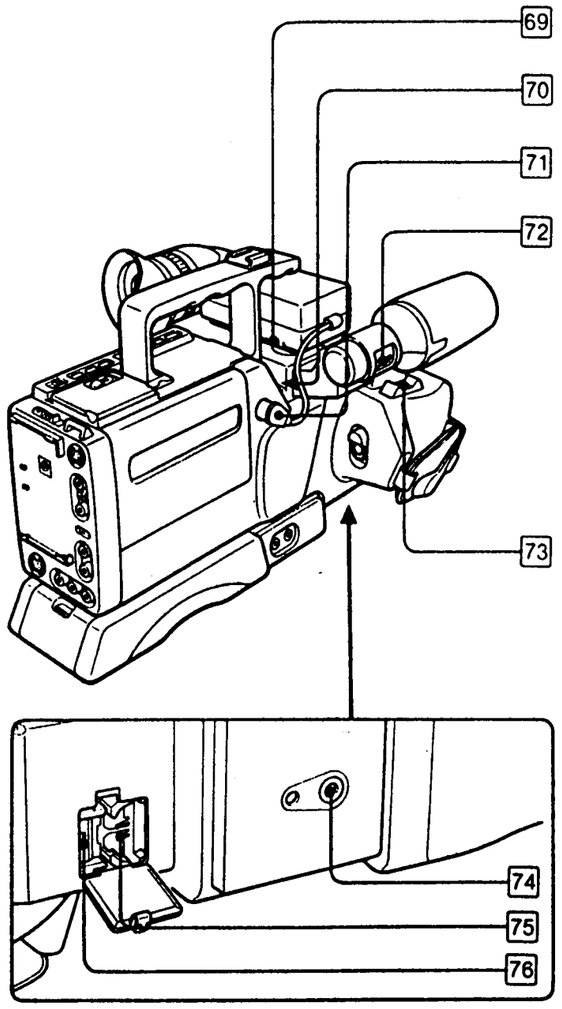

A-9

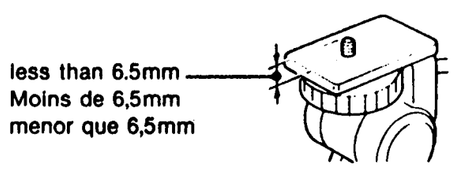

A-10

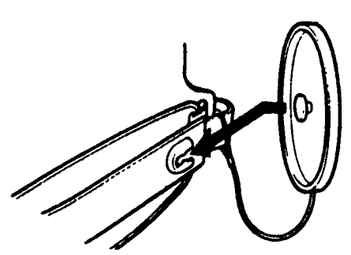

A-8

69 **PUSH SLIDE button** 64
Press to adjust the position of the viewfinder.

70 **REMOTE connector**

71 **VIEWFINDER connector** 38

72 **MIC (microphone) SELECT switch** 74
Normally set to the left (green mark) position.

73 **Variable power zoom button** 108

74 **Tripod receptacle**

75 **Lithium battery compartment** 52

76 **Hi-fi sound output select switch** 162

A-9

Note when attaching a tripod not manuafactured by Sony
When attaching a tripod not manufactured by Sony, the length of the camera mounting screw must be less than 6.5 mm.
Otherwise the screw may damage the inner parts of the camera.

A-10

When the lens cap is removed
Attach the lens cap to the grip strap.

About the mark
means the LANC connector.
LANC stands for Local Application Control Bus System. The LANC connector is used for controlling the tape transport of video equipment and peripherals connected to it. This connector has the same function as the connectors indicated as CONTROL L or REMOTE.

A-11

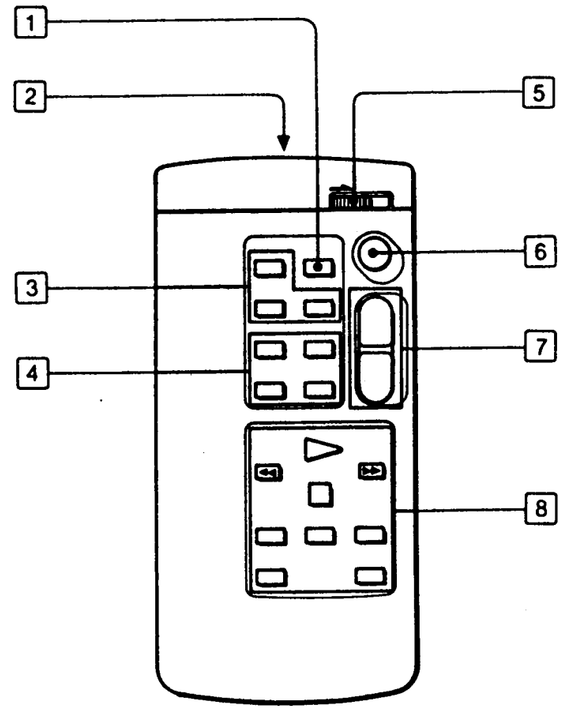

A-12

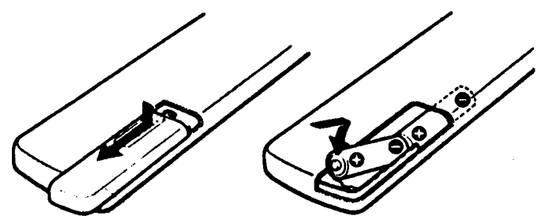

A-13

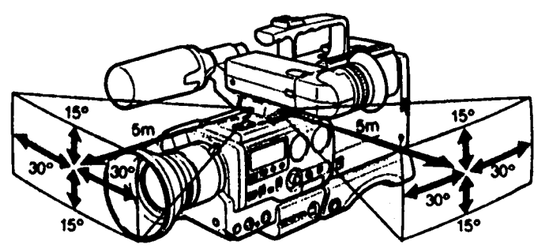

Remote Commander A-11

The buttons on the commander have the same function as the buttons on the recorder with the similar name or mark.

1 **DATA SCREEN button** 160

2 **Transmitter**

3 **INDEX buttons** 164
INDEX button
MARK button
ERASE button

4 **Digital picture buttons** 136
Press to make the digital pictures.
MULTI button
ZOOM button
FLASH MOTION button
CLEAR button

5 **HOLD button**
To avoid miss operation, set in the direction of the arrow.

6 **START/STOP button**

7 **Power zoom button** 108
The size of the subject in the scene can be changed.
The zooming speed cannot be changed with this button.

8 **Tape transport buttons**
◀◀ **REW** button, ▷ **PLAY** button, ▶▶ **FF** button, □ **STOP** button, ● **REC** button, **PAUSE** button, **FRAME** button, **SLOW** button

Installing the batteries A-12
Insert two size AA (R6) batteries with correct polarity.

Operation range A-13

Notes on the handling of batteries
- With normal operation, the batteries will last for approximately six months.
- If the Commander will not be used for a long period of time, remove the batteries to avoid possible damage from battery leakage.

Attaching the viewfinder and the shoulder strap

B-1

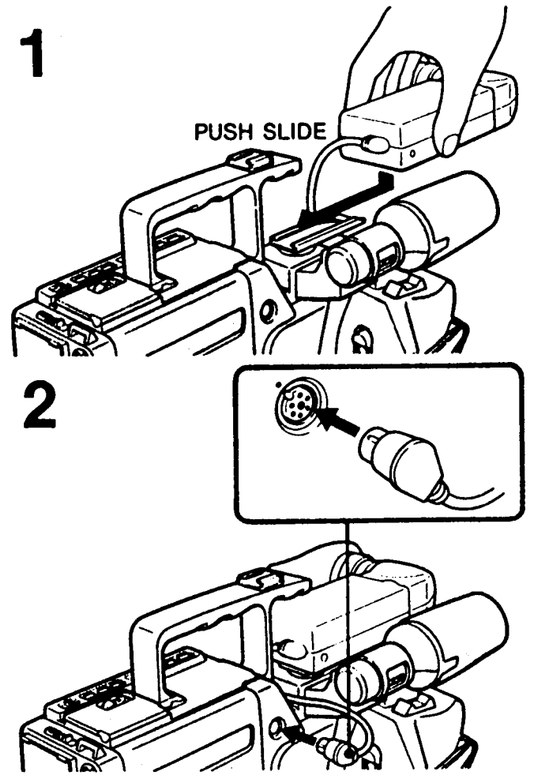

Attaching the viewfinder

Before using the video camera recorder, attach the viewfinder. [B-1]

1 While pressing the PUSH SLIDE button, slide the viewfinder completely on the guide rail.
Move the viewfinder frontward or backward a little until it locks.
2 Align the projection of the plug with the groove of the connector and connect the viewfinder cable to the viewfinder connector.

B-2

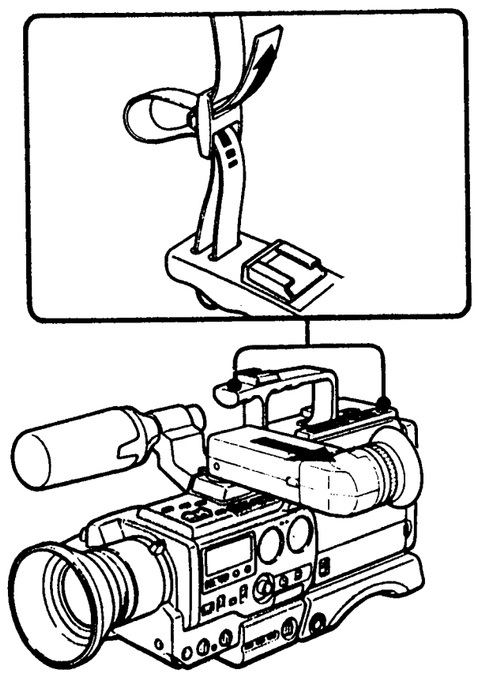

Attaching the shoulder strap

Slide the viewfinder as illustrated and then thread the shoulder strap. [B-2]

Connecting the Power Sources

First, Choose the Power Source

Place	Power source	Accessory to be used
Outdoors	Battery pack	Battery pack NP-77H or NP-77
Indoors	House Current	AC power adaptor AC-V50

Note on power sources
Disconnecting the power source or removing the battery pack during recording or playback may damage the inserted tape.
If this is done by accident, supply the power again immediately and turn on the power switch.

C-1

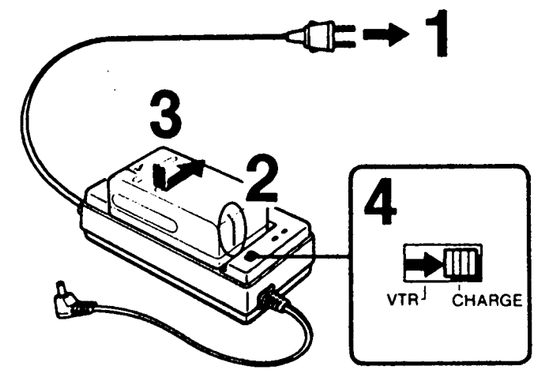

Using the Battery Pack

Step1 : Charge the battery pack. [C-1]

1 Connect the AC power adaptor to a wall outlet.
2 Align the grooves on the battery pack with those on the AC power adaptor.
3 Slide in the battery pack to the right, as illustrated.
4 Set the mode selector to CHARGE.
5 Charge the battery for:

	NP-77H	NP-77
Required charging time	140	120

(approx. minutes)

See the instruction manual of the AC power adaptor for details.

C-2

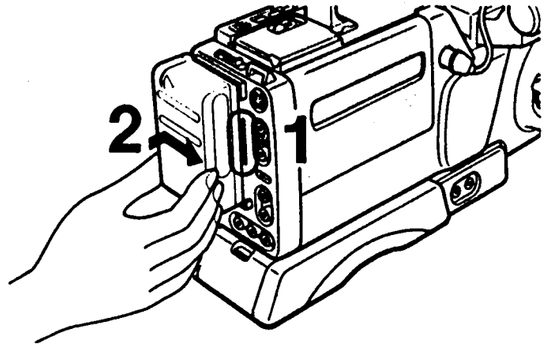

C-3

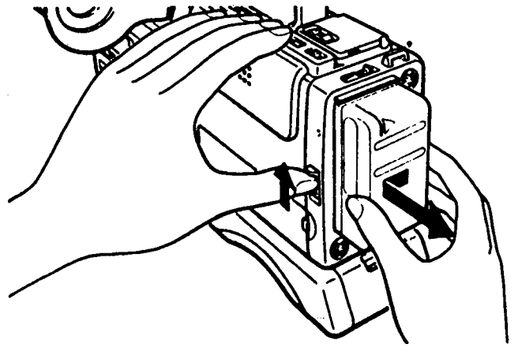

C-4

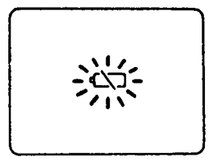

C-5

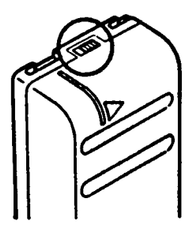

Step2 : **Mount the battery pack on the camcorder** C-2

1 Align the right side of the battery pack with the white line on the recorder.
2 Slide in the battery pack to the right.
Note: Make sure the battery fits completely on the mounting surface of the recorder. Imperfect fit may damage the projections on the recorder.

To remove the battery pack C-3
Slide BATT up, and at the same time, slide out the battery pack to the left.

Battery life
A fully charged battery pack lasts for:

	When the DIGITAL EFFECT switch is set to OFF.		When the DIGITAL EFFECT switch is set to ON.	
Battery life	NP-77H	NP-77	NP-77H	NP-77
	50	40	40	30

(approx. minutes)

When the battery becomes weak, the ⌧ indication and red lamp will blink in the viewfinder. C-4
Replace the battery pack with a fully charged one.
- An NP-55 cannot be used for this unit because the battery life of the NP-55 is too short.

How to use the switch on the battery pack C-5

This switch is provided to show you the charging condition. Set the switch to the "no mark" position when the charging is completed. Set the switch to the "red mark" position when the battery is used up.

C-6

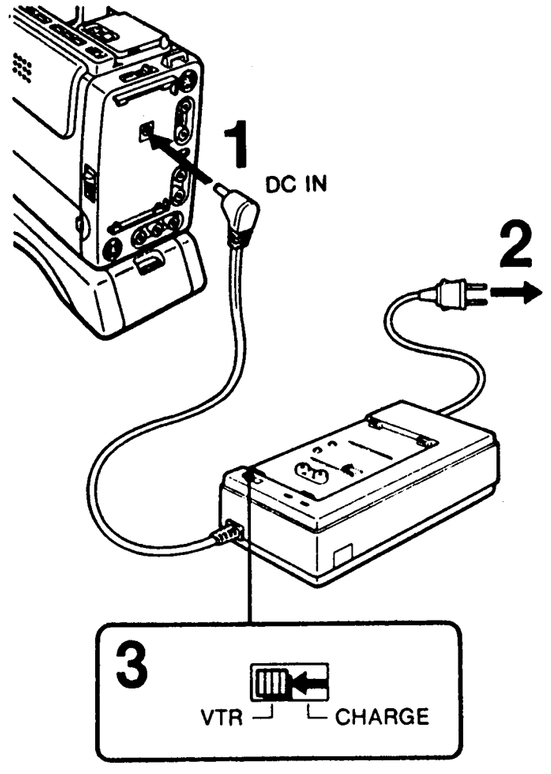

Using the AC Power Adaptor C-6

1 Connect the DC output plug of the AC power adaptor to the DC IN jack of the recorder.
2 Connect the AC power adaptor to a wall outlet.
3 Set the mode selector to VTR.
See the instruction manual of the AC power adaptor for details.

Note C-7
Use only the AC-V50 AC power adaptor (supplied).
Do not use any other AC power adaptor.
Polarity of the plug is shown in the illustration.

C-7

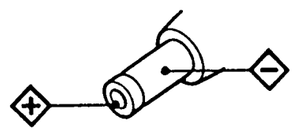

D-6

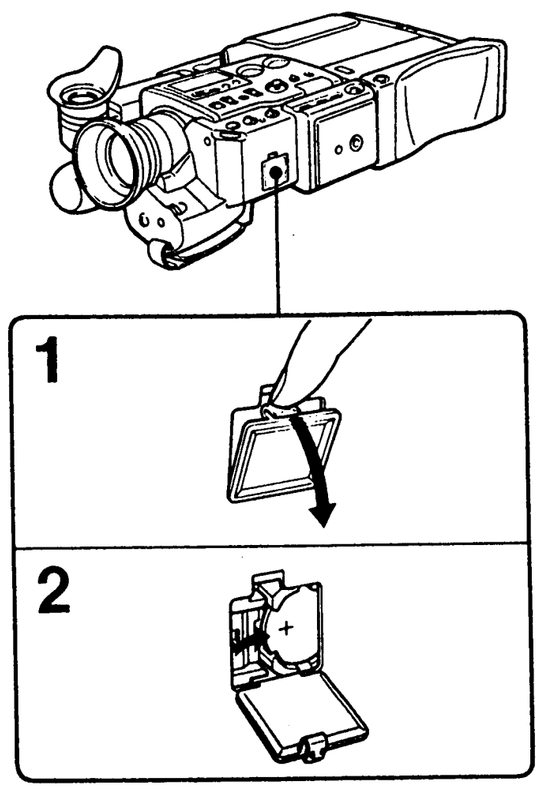

D-7

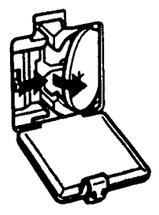

Connecting the Power Sources

Lithium Battery D-6

To insert the lithium battery
This unit uses a lithium battery to activate the clock and to keep titles in memory. Before operating the unit for the first time. install the supplied lithium battery:

1 Open the cover of the lithium battery compartment on the bottom.
2 Install the supplied CR2025 lithium battery with the ⊕ side facing out.
3 Close the cover.

To remove the lithium battery D-7
Press the side of the battery in the direction indicated for installation.

Lithium battery life
Approximately 1 year in normal operation.
When the lithium battery becomes weak, the numbers blink in the display window and the time indication will blink on the viewfinder screen for about 5 seconds.
In this case, **replace the battery with a Sony CR2025 or Duracell DL-2025 lithium battery. Use of another battery may present a risk of fire or explosion.**
After replacing the battery, readjust the date. time and titles. (If the battery is replaced with the battery pack attached, the readjustments are not necesary.)

Notes on lithium battery
- Keep the lithium battery out of the reach of children.
  Should the battery be swallowed, immediately consult a doctor.
- Wipe the battery with a dry cloth to assure a good contact.
- Be sure to observe the correct polarity when installing the battery.
- Do not hold the battery with metallic tweezers, otherwise a short-circuit may occur.
- When the battery pack is not attached, even if the lithium battery is installed, the indications in the display window will not light up.

WARNING
Battery may explode if mistreated.
Do not recharge, disassemble or dispose it in fire.

E-1

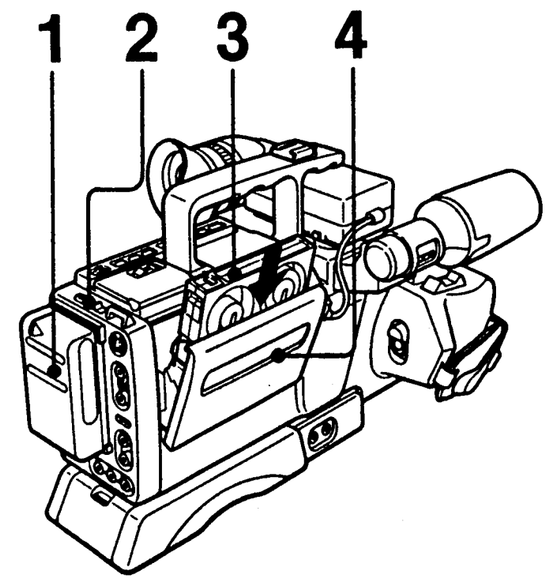

E-2

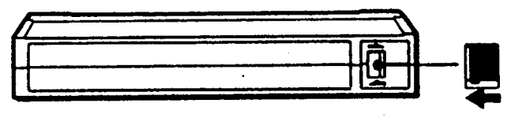

Inserting a Cassette

Cassette Insertion E-1

1 Connect a power source.
2 Press and sllide the EJECT button.
3 Insert a cassette with the window facing outside.
4 Press the cassette holder to close it.

Cassette Ejection

1 Make sure that a power source is connected.
2 Press and slide the EJECT button.
3 Take out the cassette and press the cassette holder to close it.

To Prevent Accidental Erasure

Slide out the tab on the cassette so that it covers the opening. (A red mark will appear.) E-2

To re-record on the cassette, slide the tab in to uncover the opening.

Notes
- Never insert anything in the small holes on the rear of the cassette. These holes are used to sense the kind of tape. thickness of tape, or if the tab is out or in, etc.
- To record from the beginning of the tape. run the video camera recorder for about 15 seconds at the beginning of a cassette before recording. It will avoid missing the starting point during playback on a video cassette recorder.

E-3

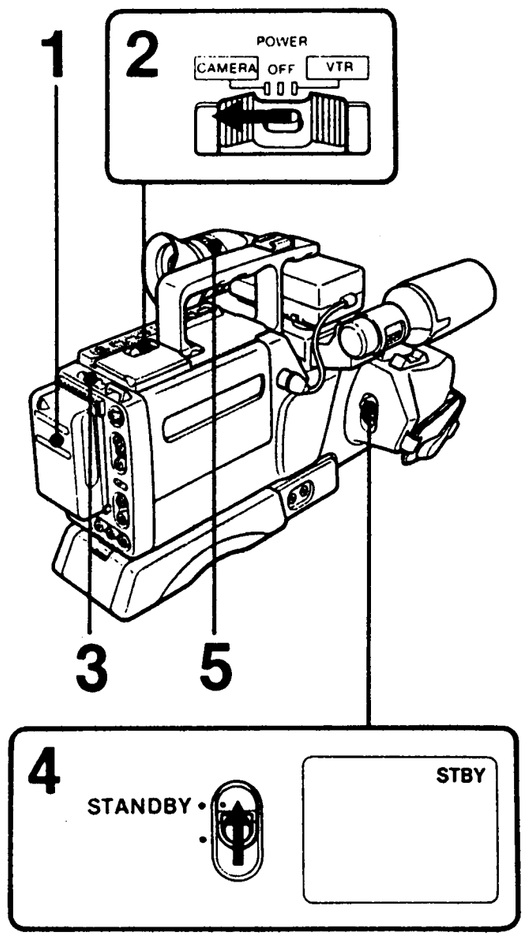

Camera Operation

Adjustment of the Viewfinder Lens

The position of the viewfinder lens for optimum vision varies depending on the person. [E-3]

1 Connect a power source.
2 While pressing the small button, set the POWER switch to CAMERA.
3 Insert a cassette.
4 Slide the STANDBY switch up.
5 Turn the viewfinder lens adjustment ring so that the indicator displayed on the viewfinder screen comes into sharp focus.

Adjustment of the viewfinder lens is necessary only for your initial use, or for use after someone else.

Note
If you leave the unit in the recording pause mode for 5 minutes or more, the unit will be automatically turned off. To resume recording pause mode, slide the STANDBY switch down once and slide it up again. To start recording, press the START/STOP button.

E-4

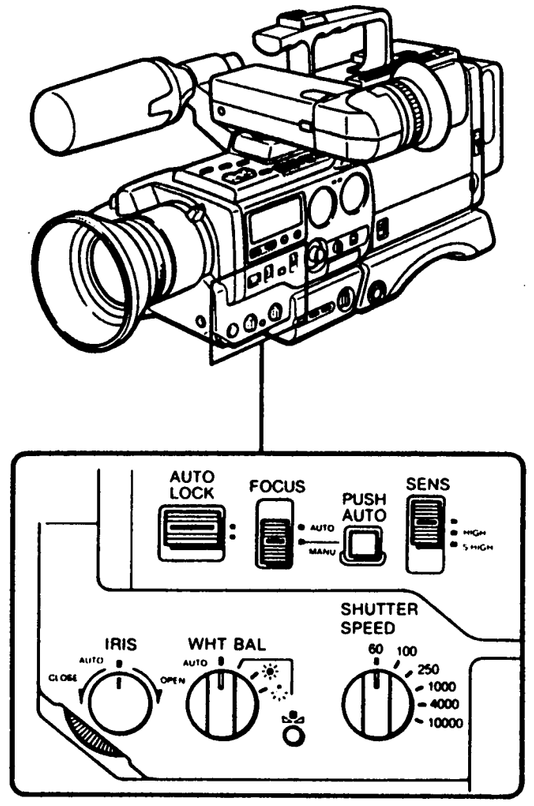

Selection of the Automatic and Manual Adjustments

Function of the AUTO LOCK Switch

When the AUTO LOCK switch is set to AUTO LOCK (green mark), the iris, focus, white balance, sensitivity and shutter speed (1/60) are adjusted automatically. But under certain circumstances, such as the white balance adjustment, manual adjustment is better for effective recording. [E-4]

When the AUTO LOCK switch is set to the lower position (white mark), each manual function works as follows.

FOCUS See page 90.	For manual focusing, set to MANU.
PUSH AUTO See page 94.	When this button is kept depressed, auto focusing activates in the manual focusing mode.
WHT BAL See page 96.	According to the condition in which the recorder is used, set to ☀ or ☼.
WHT BAL See page 98.	When the WHT BAL is set to and the button is pressed, the white balance is adjusted manually.
SENS See page 102.	Set to HIGH or S-HIGH to get high sensitivity.
IRIS See page 100.	• When the shooting subject is too dark, turn to OPEN. • When the shooting subject is too bright, turn to CLOSE.
SHUTTER SPEED See page 104.	Set this according to the shooting subject.

Even if the AUTO LOCK switch is set to the lower position, if each control is set to AUTO, it auto function will work. It is convenient to use some functions in manual mode and others in automatic mode.

E-5

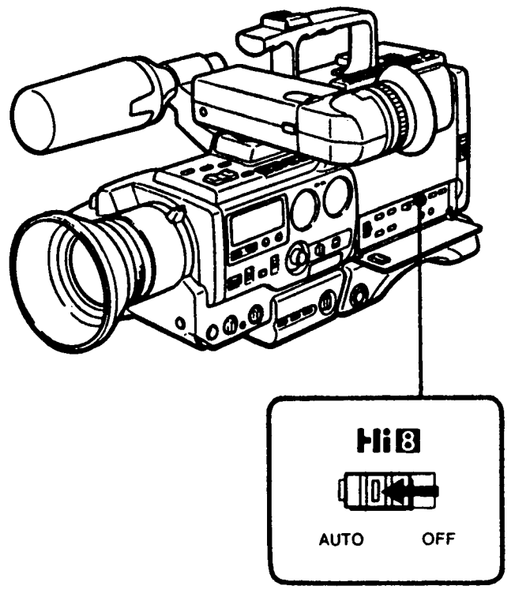

Selection of the Automatic and Manual Adjustments

Function of the Hi8 Mode Switch

When the Hi8 mode switch is set to AUTO, the recording mode is selected automatically.

- For Hi8 video system tape: Hi8 mode recording
- For standard 8mm tape: Normal mode recording

When a tape for the Hi8 video system is used for normal recording, set the Hi8 mode switch to OFF. E-5

F-1

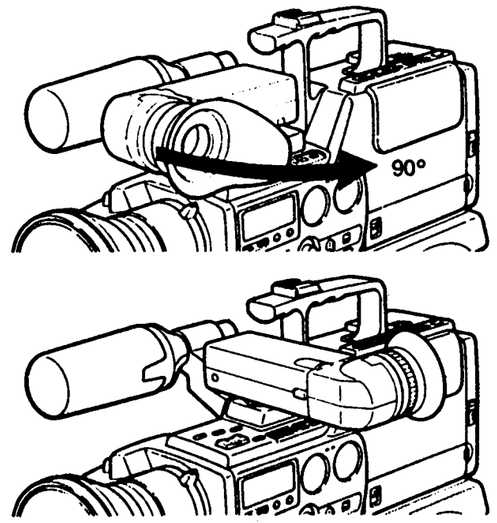

F-2

F-3

Easy Camera Recording with Automatic Adjustment

Holding the Video Camera Recorder

Setting of the viewfinder F-1
Turn the viewfinder until it locks (90 degrees).

Basic posture for recording F-2
Put the video camera recorder on your shoulder and your right elbow firmly against your side.

For low position recording F-3

1 Turn up the viewfinder.
2 Press the START/STOP button at the side of the lens.

F-4

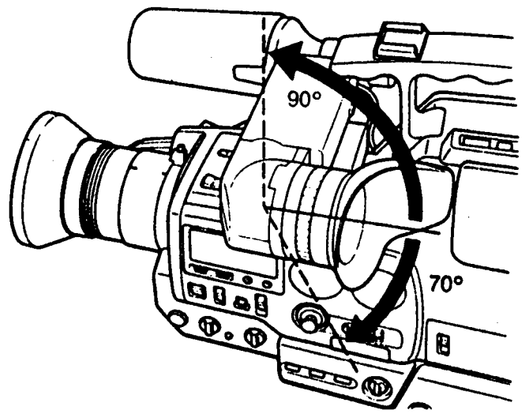

F-5

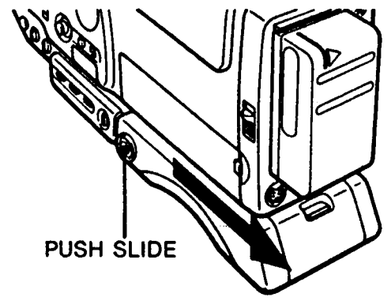

F-6

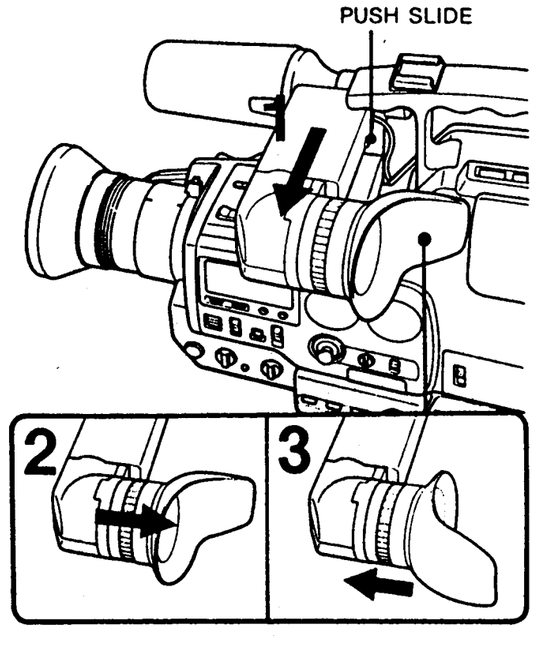

To change the angle of the viewfinder F-4
The viewfinder can be turned 90 degrees up and 70 degrees down to make high-angle or low angle shooting possible.

To adjust the position of the shoulder mount F-5
While pressing the PUSH SLIDE button, slide the shoulder mount backward. The shoulder mount can be set to one of two positions.

To view with your left eye F-6
1 While pressing the PUSH SLIDE button, slide the viewfinder. The viewfinder can be set to one of two positions.
2 Pull out the rubber eyecup.
3 Turn the eyecup and reattach it.

F-7

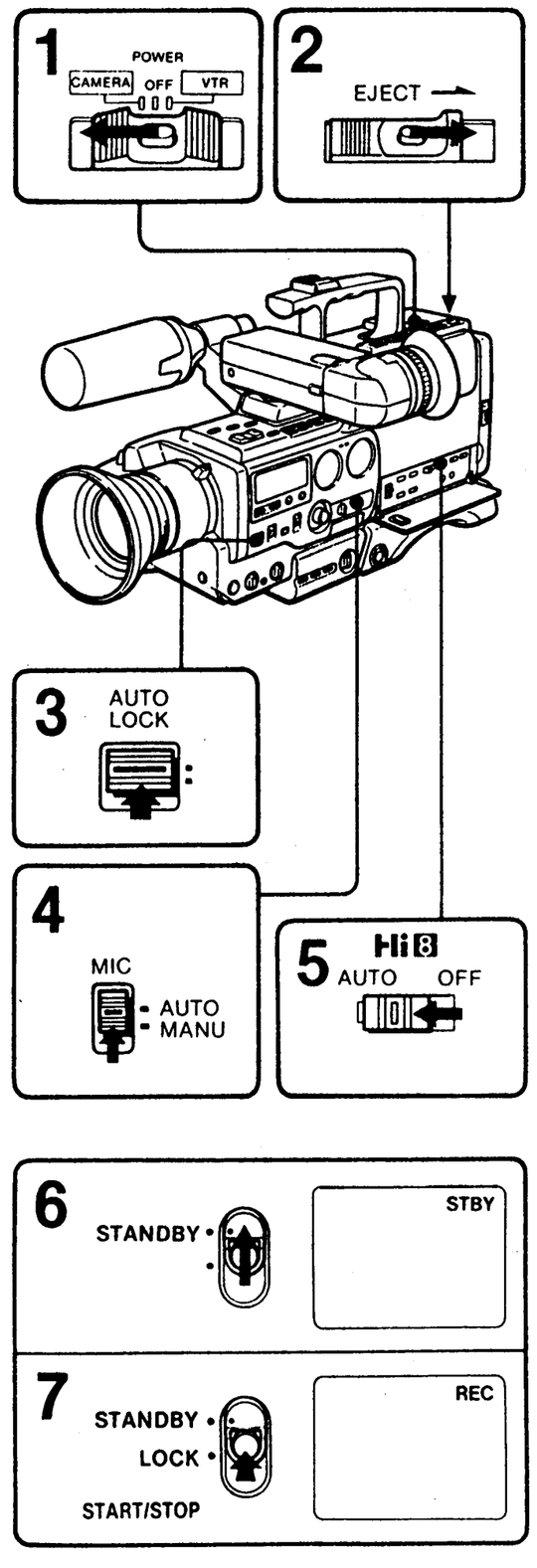

How to Record

F-7

1 While pressing the small button, set the POWER switch to CAMERA.
2 Insert the cassette.
3 Set the AUTO LOCK switch to AUTO LOCK (green position).
For manual adjustment, see pages 90 to 108.
To adjust the white balance precisely, we recommend the manual white balance adjustment with the white lens cap.
4 Set the MIC switch to AUTO.
5 Set the Hi8 mode switch to AUTO (green mark).
6 Slide the STANDBY switch up.
The unit will enter the recording pause mode.
7 Press the START/STOP button.
Recording will start.

For digital picture recording, see "Viewing digital picture" on page 136.

Check on the viewfinder screen
STBY: Displayed during recording pause mode.
REC: Displayed during recording.

To stop recording
Press the START/STOP button again.
The unit will enter the recording pause mode.
Avoid rough handling or mechaniical shock to the unit. A smooth transition between scenes may not be made.

G-1

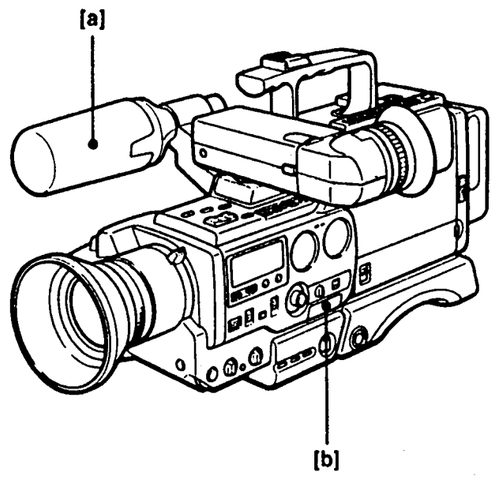

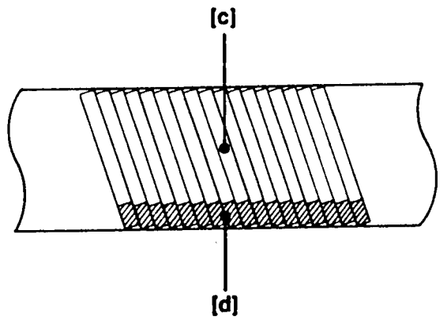

Audio Recording

There are two kinds of built-in microphones, one-point stereo microphone and narration microphone.
The one-point stereo microphone is a uni-directional type. The sharp directivity allows recording of the sound from the subject itself and its surroundings with natural sound quality.
The narration microphone is to be used for telling the event during recording.
The sounds from the one point stereo microphone can be recorded in stereo on the standard track and the PCM track, and the sounds from the narration microphone can be recorded in monaural on the standard track.

An external stereo microphone and external narration microphone can be connected to this unit, also.
For details on the recording tracks where the sounds from each microphone are recorded, see the table below.

When the built-in microphone is used, the audio signal is recorded as follows. G-1
[a] One point stereo microphone
[b] Narration microphone
[c] Standard track (Hi-fi stereo recording)
[d] PCM track (digital stereo recording)

Sound to be recorded / Microphone to be used	Standard track		PCM track	
	L channel	R channel	L channel	R channel
One-point stereo microphone	L sound	R sound	L sound	R sound
When the narration microphone is set to ON.	L sound and narration (monaural)	R sound and narration (monaural)	L sound	R sound

Audio Recording

When an external microphone is connected, the audio signal is recorded as follows.
The sound from the external microphone can be recorded in stereo on the standard track and the PCM track. When the built-in narration microphone is used with the external microphone, the sounds from both microphones are mixed on the standard track.

Sound to be recorded / Connection	Standard track		PCM track	
	L channel	R channel	L channel	R channel
L and R	external L microphone	external R microphone	external L microphone	external R microphone
L	external L microphone	external L microphone	external L microphone	external L microphone
R	built-in L microphone	external R microphone	built-in L microphone	external R microphone

When the external narration microphone is used
The sound from the external narration microphone can be recorded in monaural on the standard track. The Hi-Fi lamp will be turned off (page 86).
When the built-in stereo microphone or the external stereo microphone is used with the external narration microphone, the sound from the stereo microphone can be recorded on the PCM track.

Use of the One Point Stereo Microphone

Normally set the MIC switch to AUTO and the recording level will be adjusted automatically. However, according to the recording condition or subject, more effective recording can be done by manual adjustment. See "Recording level adjustment" on page 86.
When there is strong wind, set the MIC SELECT switch to WIND. The effects of wind noise will be reduced.

G-2

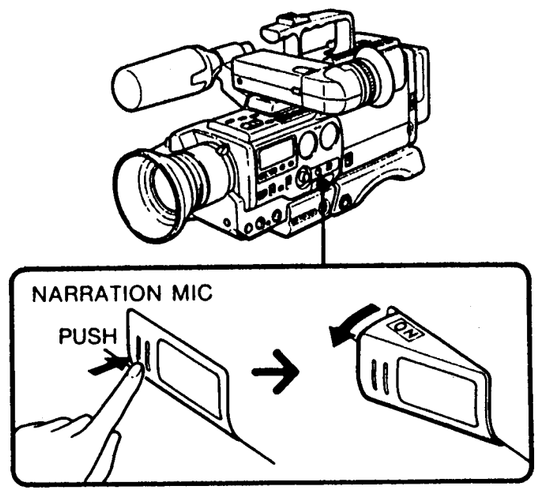

Use of the Built-in Narration Microphone G-2

During recording, the narration can be recorded. Press the PUSH mark on the NARRATION MIC.
While recording the narration, the sound from the one-point stereo microphone can be recorded on the standard track and the PCM track.
While recording with the POWER switch set to VTR, the narration can be recorded.

After using, push in the microphone.
The narration microphone will be turned off automatically.

G-3

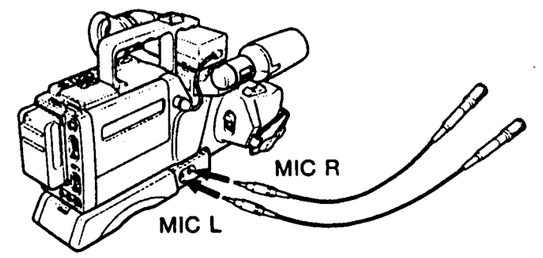

Use of an External Stereo Microphone G-3

Connection example
Connect each microphone to the MIC L and R jacks.
When one microphone is connected, for the track where the sound from the built-in or external microphone is recorded, see the table on page 80.

Variety of optional microphones
- To pick up specific sounds
  — uni-directional microphone
- To isolate a sound
  — supercardioid microphone
- To allow the field of recording to be changed
  — zoom microphone
- To pick up sounds equally from all directions
  — omni-directional microphone

Adjustment of the recording level
See the "Recording level adjustment" on page 86.

Note
Keep the microphone far away from the TV so that the hum noise does not occur.

G-4

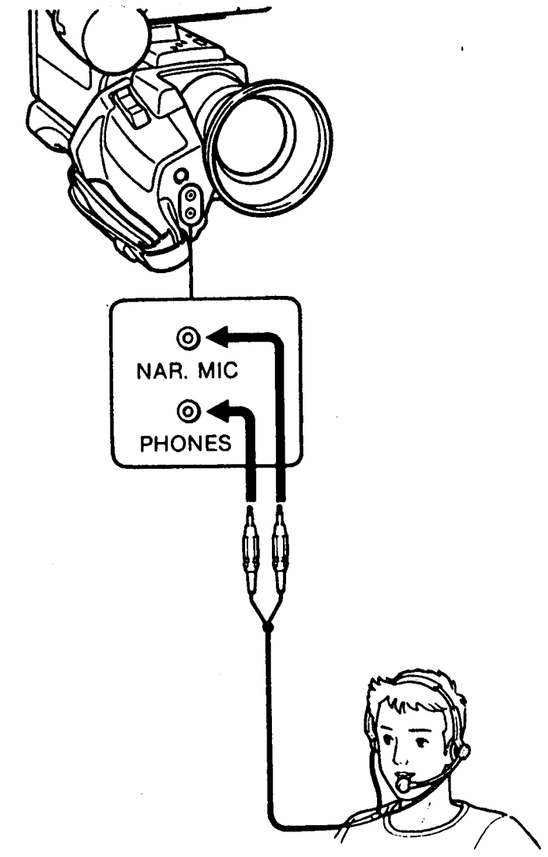

Use of an External Narration Microphone G-4

When a stereo headphone equipped with the microphone is used, the narration can be dubbed during monitoring the recording sound.

When the external narration microphone is connected
- The built-in narration microphone will not be functioned.
- The sounds from only the external narration microphone can be recorded in monaural on the standard track.

When the sounds are played back by the VCR without the PCM recording or playback function.
The sounds from only the external narration microphone will be played back.

Adjustment of the recording level
See the "Recording level adjustment" on page 86.

Recording Level Adjustment

G-5

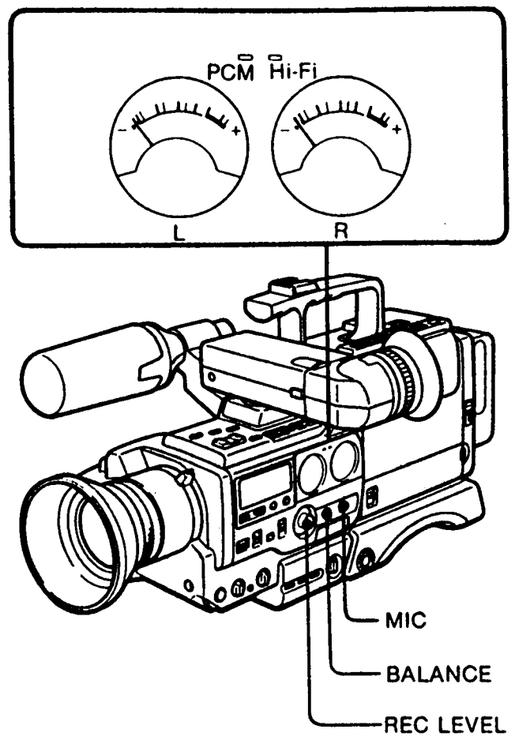

When the MIC switch is set to the green (upper) position, the recording level of the microphone will be adjusted automatically. However, for the audio dubbing or the tape editing, the manual adjustment is recommended. G-5

Volume adjustment G-6

1 Set the MIC switch to MANU.
2 Adjust the volume.
Turn the REC LEVEL control so that the meter sometimes enter into the red zone.

Balance adjustment G-7

1 Set the MIC switch to MANU.
2 Turn the BALANCE control to adjust the balance.
To increase the volume of the right channel
— Turn towards the R side.
To increase the volume of the left channel
— Turn towards the L side.

Order of the adjustments
First adjust the volume and then balance.

Reading the level meter
- If the meter swings into the red zone, the recorded sound is distorted.
- If the meter hardly swings at the left position, recording will be noisy.

G-6

G-7

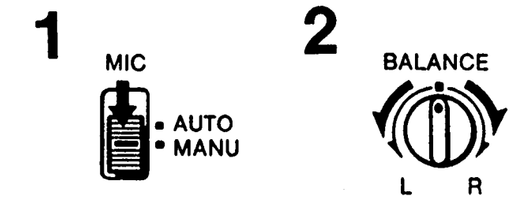

To Mark Index Signals during Recording

G-8

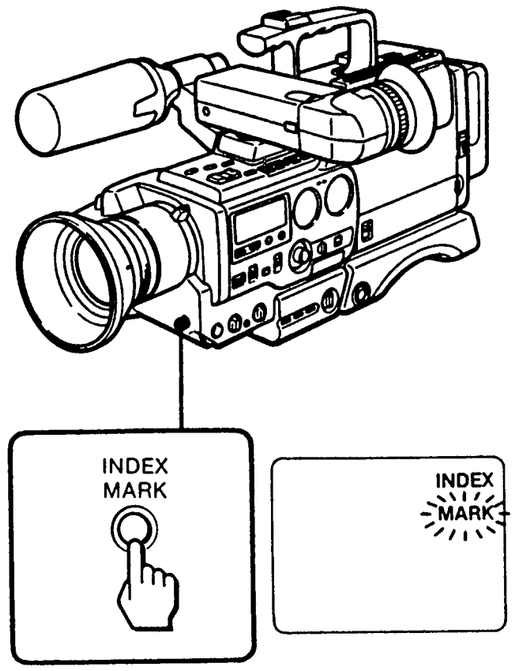

The desired program can be easily located by an index signal marked on the tape.
Press the INDEX MARK button at any desired point on the tape during camera recording. G-8

When the index signal is marked in the recording pause mode (the MARK indication blinks), the index signal will be marked just after the recording pause mode is released.

For other index operations, see page 164.

Notes
- The index signals can be marked at any desired point. But make sure there is more than 2 minutes of space between two index signals. If there is more than one index signal marked within an interval of 2 minutes on a normal tape run, the unit may not function properly.
- The INDEX MARK indication disappears automatically.
Continue to record until the INDEX MARK disappears so that the recorded index signal can be searched correctly in the playback mode.

When the POWER switch is set to VTR, the index signal can also be marked during recording.
If the REC switch is pressed to start recording in the stop mode, an index signal will be automatically marked at the beginning of the tape.

Recording Date or Time

H-10

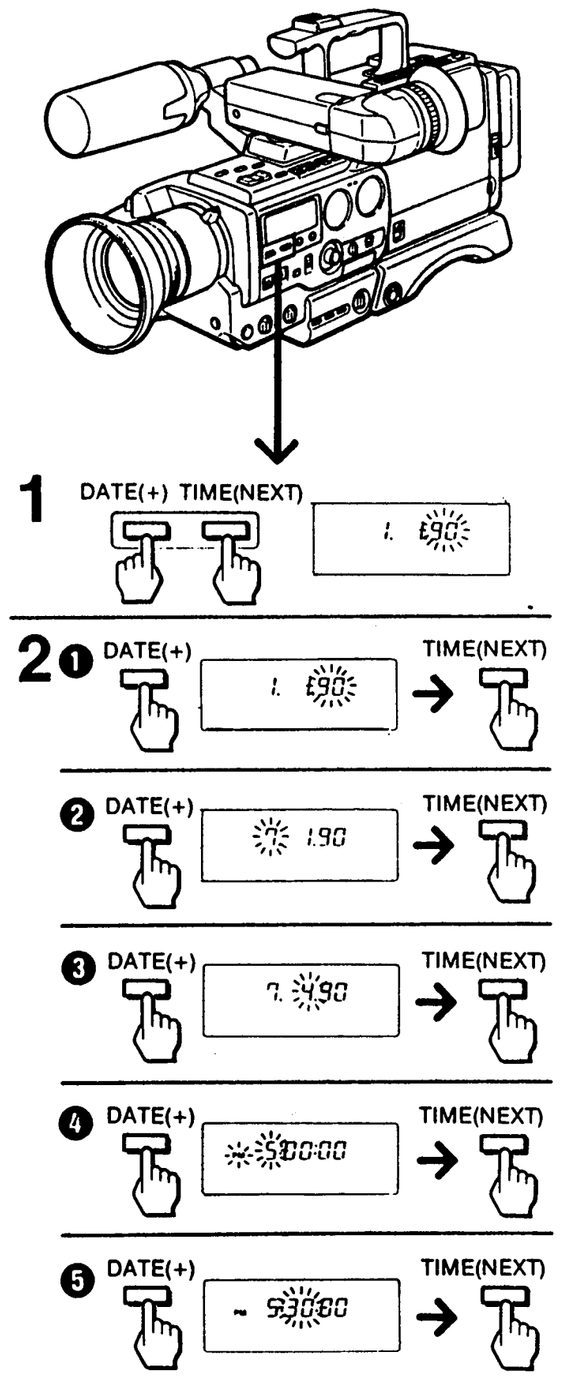

Once the date and the current time are adjusted, the date or time can be recorded together with the picture.

Before setting the date and time. make sure that the fully-charged battery pack and lithium battery are installed.

To Set Date and Time H-10

1 Press the DATE and TIME buttons simultaneously **for more than 3 seconds.** The date indication will appear in the display window (date/time setting mode). The DATE button now functions as the + button and the TIME button functions as the next button.
2 Adjust the ❶ year, ❷ month, ❸ day, ❹ hour and ❺ minute in sequence, following the illustration.
First adjust the blinking digits with the DATE button, and then press the TIME button.
After adjusting the minute digits. press the TIME button at the same time wiith an announced time signal.

The clock starts operating. There is no need to readjust the date and time as long as the lithium battery remains.

To clear the time indication from the display
Press the TIME button again.

The DATE button can be pressed in two ways
- When you keep the button pressed, the digits will advance continuously.
- When you press and immediately release the button, the digits will advance by one.

H-11

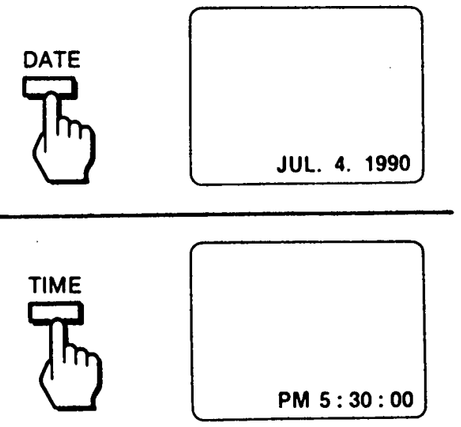

To check the preset date or time
Press the DATE or TIME button in the recording pause mode. When the same button is pressed again, the indication goes off.

To readjust an incorrect date or time
Set the unit to date/time setting mode and press the TIME button repeatedly until the incorrect digit blinks. Correct it with the DATE button and press the TIME button. After adjusting the minute digits, press the TIME button at the same time with an announced time signal.

Note
The date and time cannot be set during recording.
If the recorder is set to the recording mode while setting the date and time, the setting mode will be released.

To Record the Date or Time H-11

During camera recording or in recording pause mode, press the DATE or TIME button to display the date or time on the viewfinder screen.
The date or time being displayed will be recorded together with the picture.

To stop recording the date or time
Press the DATE or TIME button again. The picture recording will continue.

Fade-in and Fade-out I-51

I-1

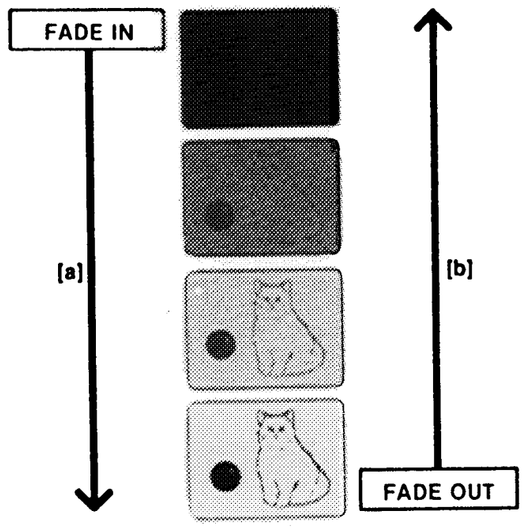

When fade-in, the picture and sound will appear gradually from a black, silent scene. **[a]**
With fade-out, the picture and sound will disappear gradually. **[b]**
Dramatic effects can be added by using fade-in at the beginning of a recording and fade-out at the end.

To Fade in I-52

1 Slide the STANDBY switch up to set the unit to recording pause mode.
2 Press the FADER/OVERLAP button **once**.
3 Press START/STOP button to start camera recording.
Fade-in will be performed.

To Fade out I-53

1 Start camera recording.
2 Press the FADER/OVERLAP button **once**.
3 At the point where fade-out is to be started, press the START/STOP button.
Fade-out will be performed and then recording will stop.

To cancel FADER mode before fade-in or fade-out
Press the FADER/OVERLAP button **twice** so that the FADER indication disappears.

Notes
- The FADER/OVERLAP button will function while the STBY or REC indication lights. When the +VTR button is set in the direction of the arrow, the FADER/OVERLAP button will not function in the stop mode.
- The FADER mode is cancelled automatically once fade-in or fade-out has been performed.
- When fade-in or fade-out is operated while the title appears, the title will change to monochrome.

I-2

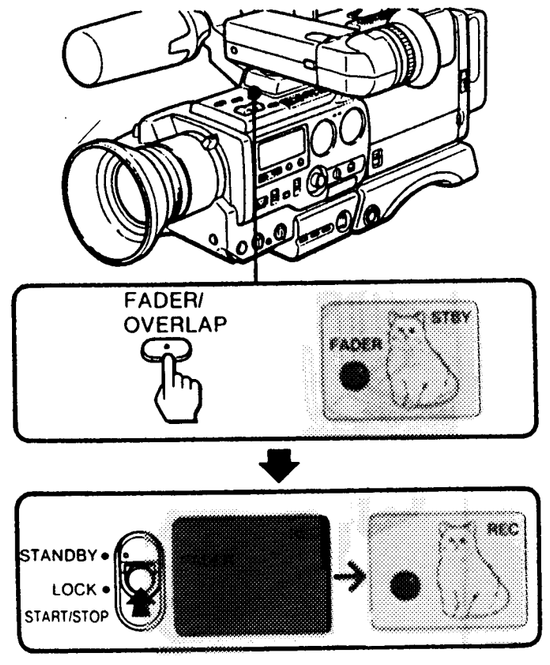

I-3

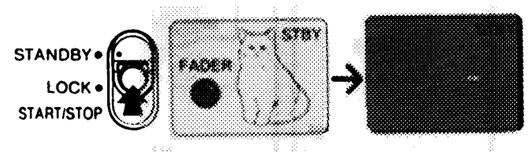

Interval Recording

A recording of one second will be activated repeatedly at one minute intervals. This is convenient for recording changes such as a flower developing from bud to flower or on insect growing wings. I-4

1 While pressing the small button, set the POWER switch to CAMERA.
2 Set the video camera recorder to the recording pause mode.
3 Slide the INT REC button in the direction of the arrow. The interval recording will be started and the "STBY INTERVAL" will be displayed.
4 Slide the INT REC button in the direction of the arrow to stop the interval recording.

- For interval recording, signals from the VIDEO/AUDIO input jacks can be used. Set the POWER switch to VTR.

For stable recording, use a tripod. I-5

I-4

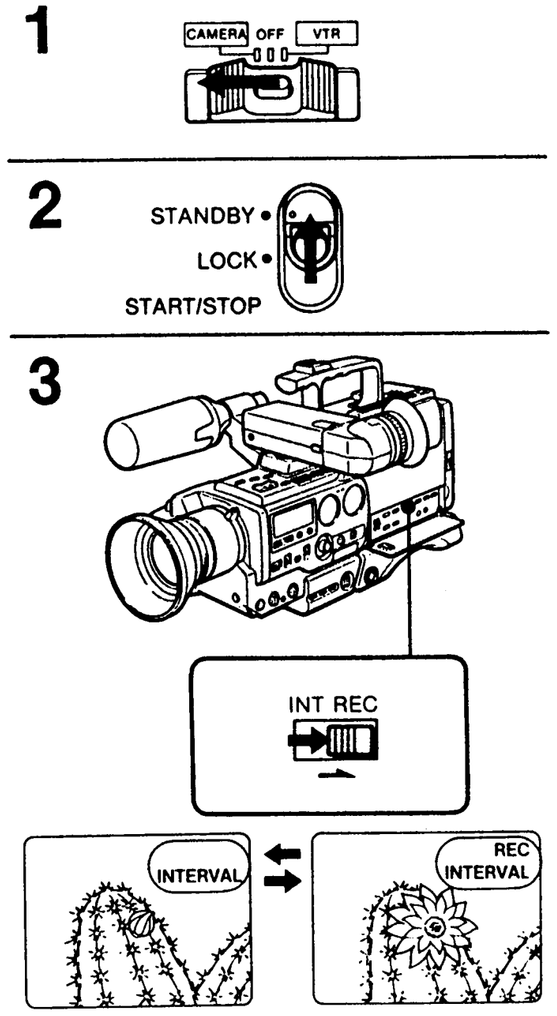

I-5

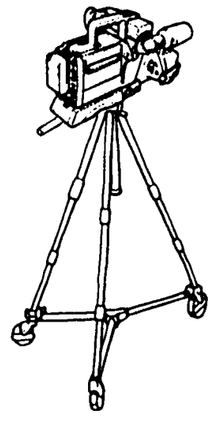

I-6

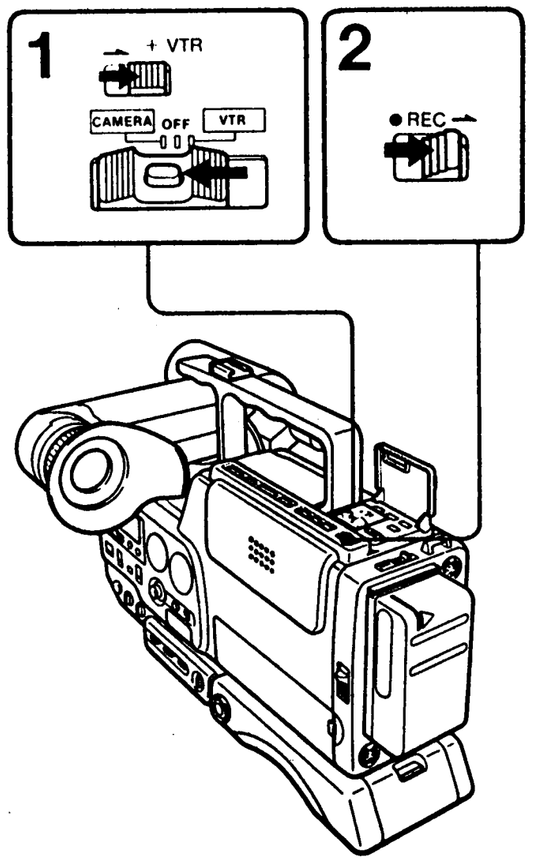

Frame Recording

A recording of six frames can be activated manually for creating an animated program of your own. I-6

1 While pressing the small button, set the POWER switch to CAMERA, and +VTR switch in the direction of the arrow.
2 Slide the REC switch in the direction of the arrow.
A recording of six frames will be made and the recording pause mode will resume.
3 Move the subject a little and repeat step 2 as many time as you like.

- For frame recording, signals from the VIDEO/AUDIO input jacks can be used. Set the POWER switch to VTR.

I-7

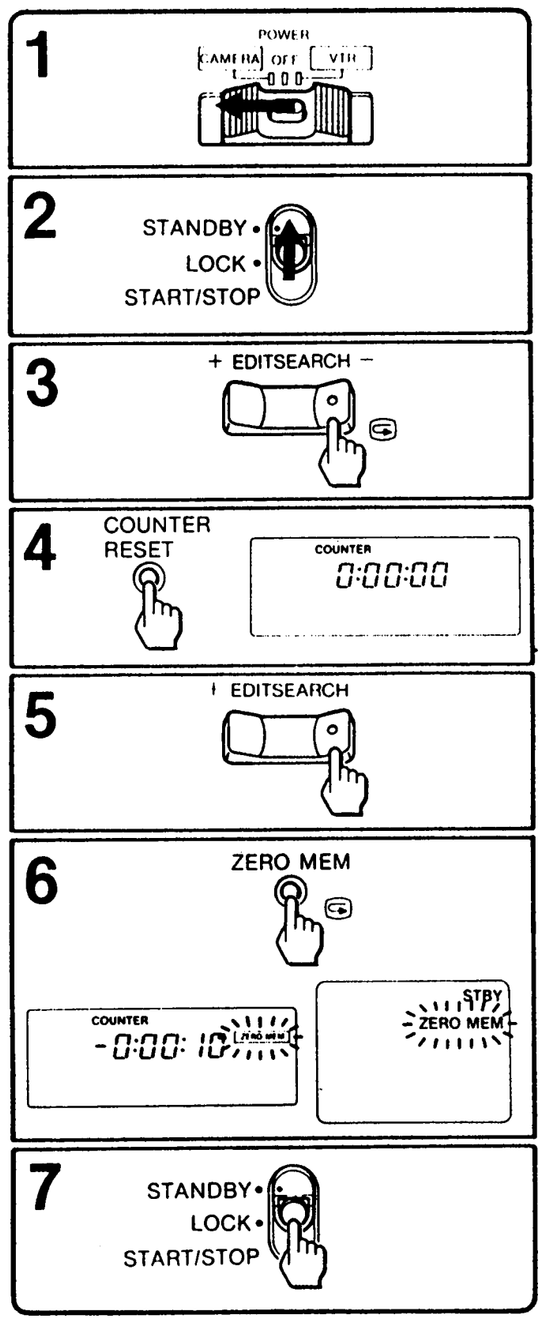

Editsearch

You can insert (record) video and audio simultaneously from the camera onto any recorded tape.

Operation I-7

Monitor the picture being inserted on the viewfinder screen.

1 While pressing the small button, set the POWER switch to CAMERA.
2 Slide the STANDBY switch up to set the unit to recording pause mode.
3 Keep pressing the "+" or "–" side of the EDITSEARCH button and release the button at the point where the insert should **end.**
The unit will be set to recording pause mode.
4 Display the counter in the display window and press the COUNTER RESET button.
The counter is reset to zero.
(For an accurate ending point, press the COUNTER RESET button immediately after the EDITSEARCH button is released and while the still picture is displayed.)
5 Keep pressing the "–" side of the EDITSEARCH button and release the button at the point where the insert should **begin.**
6 Press the ZERO MEM button.
The insert ending point is stored in memory.
7 Press the START/STOP button.
Insert recording will begin.

The insert recording will stop automatically near the counter zero point.

To cancel ZERO MEM mode
Press thee ZERO MEM button so that the ZERO MEM indicator disappears.

To change the insert ending point
Press the ZERO MEM button to turn off the ZERO MEM indicator and repeat steps 3 through 6 above.

To insert the date or time
Follow steps 1 through 6 above, press the DATE or TIME button to display the date or time indication on the viewfinder screen and then press the START/STOP button.

J-1

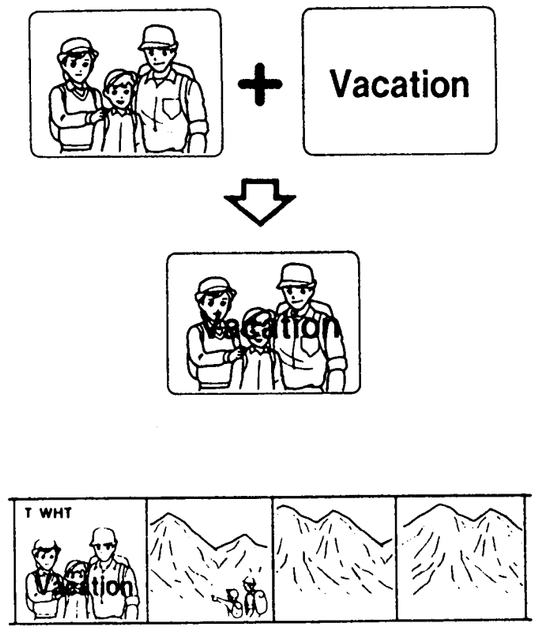

Recording a Title

Before recording, memorize a title or figure. The memorized title or figure is superimposed onto the picture being recorded. J-1

- Two kinds of titles or figures can be memorized.
- The color of the title or figure can be selected from 8 colors.

Make sure that the lithium battery is installed. See page 52.

Preparations

To make a desired title card

- Use a white and plane card and draw the title on it with a deep color (black is recommended for the best result) in thick letters.
  If contrast is clear, a signboard can be memorized like the title card.
- When deciding the title size, check the effective picture size on your video monitor.

Before memorizing a title

- Fix the title card and the video camera recorder.
- Use of an appropriate light is recommended for a better result.

Function of the COLOR/MODE button

This button is used to select the title color or title mode.

When the title is displayed	When the title is not displayed
Used as the COLOR button.	Used as the MODE button.
→ WHT → BLUE → GRN → CYAN → (white) (green) BLK ← YEL ← VIO ← RED ← (black) (yellow) (violet)	No title mode ← ↑ → T → T↑ ↑: title scroll mode T: title reverse mode T↑: title reverse and scroll mode
Each push of the COLOR/MODE button cyclically changes the color or mode.	

J-2

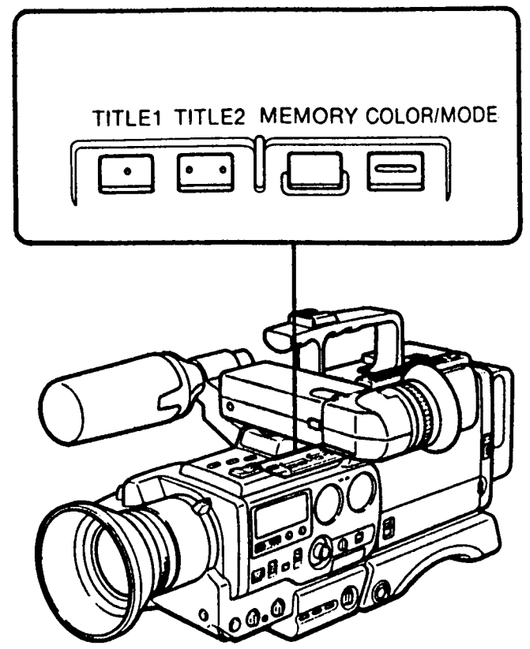

To Memorize the Title J-2

1 While pressing the small button, set the POWER switch to CAMERA.
2 Slide up the STANDBY switch to set the unit in the recording pause mode.
3 Point the camera to the title card and adjust the focus.
4 Press the TITLE 1 or 2 button.
5 Press the MEMORY button to memorize the title.
6 Select the title color while observing the color indication in the viewfinder. Each push of the COLOR/MODE button cyclically changes the color, as follows:

WHT (white) → BLUE → GRN (green) → CYAN
↑ ↓
BLK (black) ← YEL (yellow) ← VIO (violet) ← RED

7 Press the TITLE 1 or 2 button (pressed in step 4) to turn off the title.

Notes

- The color indication in the viewfinder is not recorded on the tapes.
- You can change the title color even after starting the recording.

To check the title

To check the memorized title, press the TITLE 1 or 2 button. To turn off the title, press the button again.

To Record the Title

To record the title from the beginning

Press the TITLE 1 or 2 button in recording pause mode, and then start recording.

To record during camera recording

Press the TITLE 1 or 2 button at the point from which the title is to be inserted.
The memorized title will be recorded together with the picture.

To stop recording the title

Press the TITLE 1 or 2 button again. The picture recording will continue.

To record the same title several times

By repeating the above procedure, you can record the title as many times as desired.

J-3

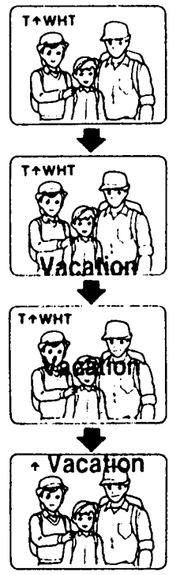

J-4

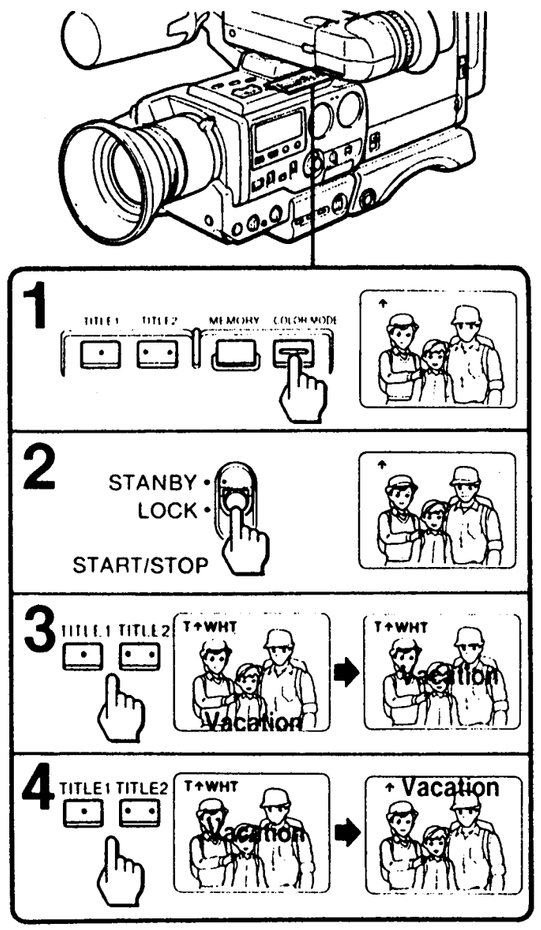

Recording a Title

To Scroll the Title from Bottom to Top

During recording, the memorized title can be scrolled from bottom to top. J-3

To record the scrolled title J-4

1 In the recording pause mode, press the COLOR/MODE button.
The arrow mark will be displayed.
2 Start the camera recording.
3 Press the TITLE 1 or 2 button at the point from which the scrolled title is to be recorded.
4 After the title stops at the center of the picture, press the TITLE 1 or 2 button again.
The title is scrolled from center to top.

To clear the scroll mode
After recording, press the COLOR/MODE button **three times.**

If you do not want to record the picture for the background
Point the recorder to a white, flat object such as a white wall, paper, etc.

To change the color of the title
While the title is being scrolled or displayed at the center, press the COLOR/MODE button.

J-5

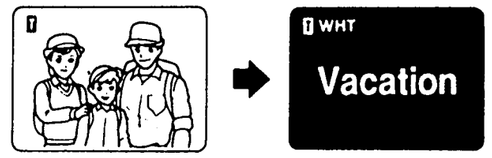

J-6

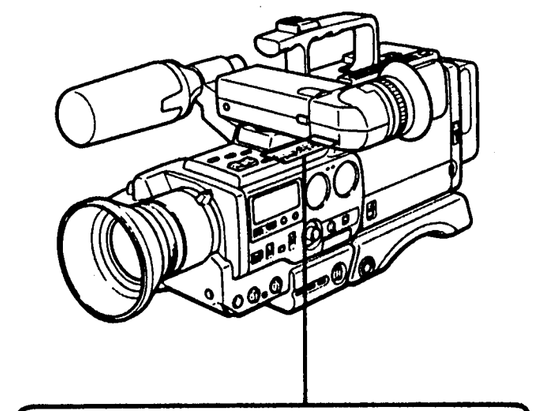

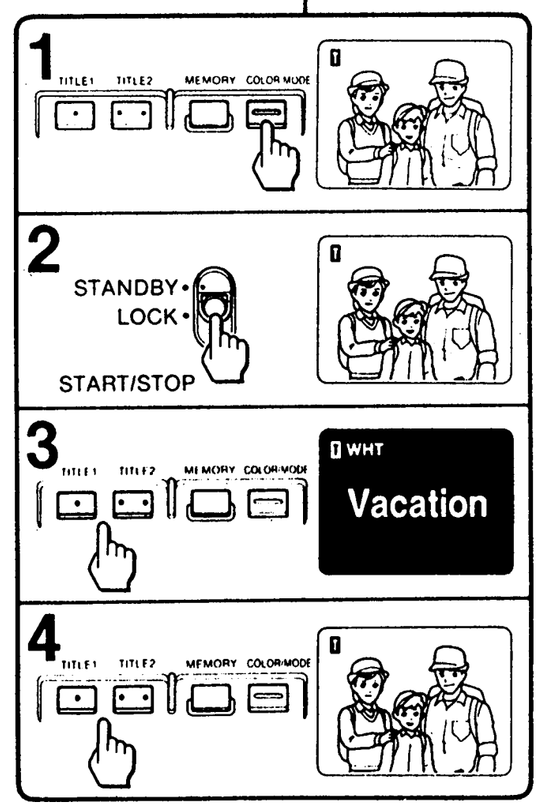

Recording a Title

To Reverse the Title and the Background

The color scheme of the title and the background can be reversed. J-5

To record the reversed picture from the beginning

1 In the recording pause mode, press the COLOR/MODE button **twice.**
The T mark will be displayed.
2 Press the TITLE 1 or 2 button.
3 Start the camera recording.
4 Press the TITLE 1 or 2 button again to clear the reversed picture.

To record the reversed picture during recording J-6

1 In the recording pause mode, press the COLOR/MODE button **twice.**
The T mark will be displayed.
2 Start the camera recording.
3 Press the TITLE 1 or 2 button at the point from which the reversed picture is to be recorded.
4 Press the TITLE 1 or 2 button again to clear the reversed picture.

To clear the reverse mode
After recording, press the COLOR/MODE button **twice.**

If you do not want to record the picture for the background
Point the recorder to a white, flat object such as a white wall, paper, etc.

To change the color of the background
While the title is being displayed, press the COLOR/MODE button.

J-7

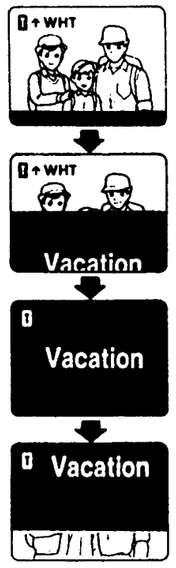

J-8

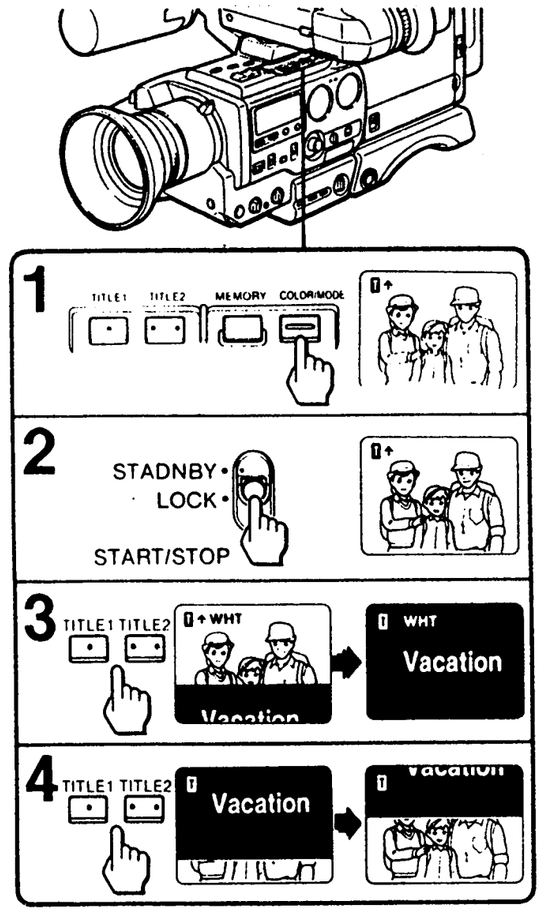

Recording a Title

To Scroll the Reversed Title J-7

To record the reversed and scrolled title J-8

1 In the recording pause mode, press the COLOR/MODE button **three times.**
The arrow mark and the T mark will be displayed.
2 Start the camera recording.
3 Press the TITLE 1 or 2 button at the point from which the scrolled title is to be recorded.
4 After the reversed title stops at the center of the picture, press the TITLE 1 or 2 button again.
The reversed title is scrolled from center to top.

To clear the reversed scroll mode
After recording, press the COLOR/MODE button **once.**

If you do not want to record the picture for the background
Point the recorder to a white, flat object such as a white wall, paper, etc.

To change the color of the background
While the title is being scrolled or displayed at the center, press the COLOR/MODE button.

K-1

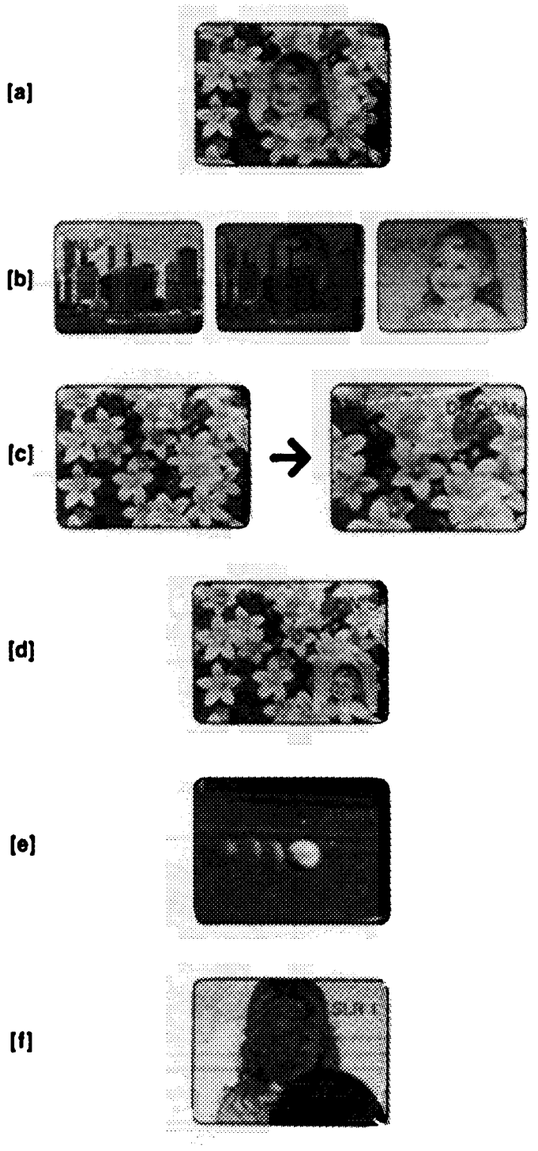

Viewing Digital Pictures

The digital picture function performs digital image processing of the recording or playback pictures and displays them on the screen with various effects.

Digital Pictures Viewed with this Unit K-1

Display Page	Digital picture name	Operation		Page
		at camera recording	at playback	
[a]	**Digital still picture superimpose** A desired shaped picture can be recorded in the desired portion of the still picture.	Yes	No	K10
[b]	**Overlap** The new scene appears and is recorded gradually on the last recorded scene.	Yes	No	K12
[c]	**Digital zoom** The center portion of the picture is zoomed up twice.	Yes	Yes	K14
[d]	**Picture in still** A small picture is displayed in the lower right position of the still picture and a new scene can be recorded there or the playback picture can be viewed.	Yes	Yes	K15
[e]	**Strobe** The mooving white object is viewed with the after-image.	Yes	Yes	K16
[f]	**Solarization** A picture with a solarization effect can be viewed.	Yes	Yes	K16

to be continued

K-2

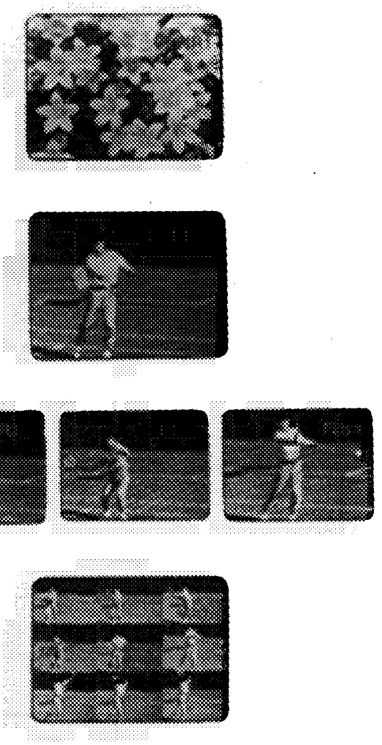

Viewing Digital Picture

K-2

Dis-play Page	Digital picture name	Operation		Page
		at camera recording	at playback	
[g]	**Noise reduction** A picture with noise reduced can be viewed.	Yes	Yes	148
[h]	**Stop motion** A still picture can be viewed.	Yes	Yes	150
[i]	**Flash motion** The picture freezes, and after a given period of time the next still picture can be viewed.	Yes	Yes	150
[j]	**Multi-picture** 9 frame pictures can be viewed. A still picture appears up to 8 frames succesively at specific intervals and the normal playback or recording is continued on the last section.	Yes	Yes	150

Using with the title operation
During the digital picture operation, the memorized title will be superimposed by pressing the TITLE (1 or 2) button.

Note on the digital picture
The color may vary.

Note on DIGITAL EFFECT switch
During recording, do not change the setting of the DIGITAL EFFECT switch. The switch will not function.

K-3

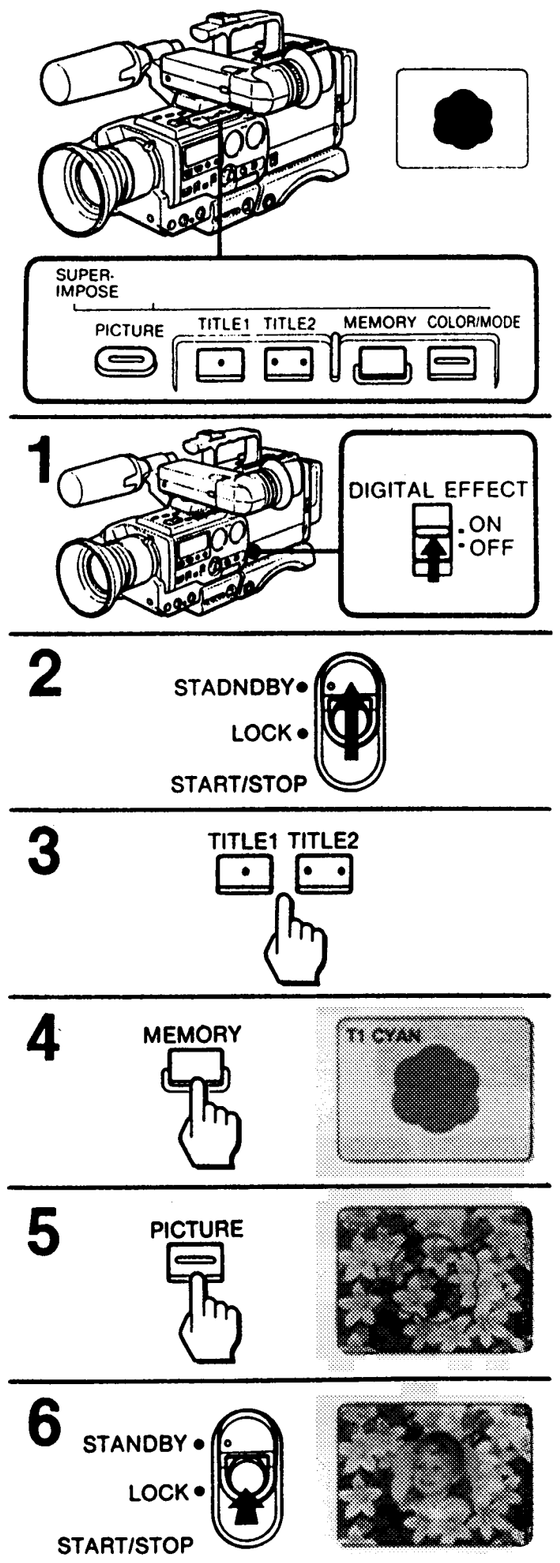

Viewing Digital Pictures

To Record a Desired Shaped Picture in the Desired Portion of the Still Picture

— Digital Still Picture Superimpose

This function can be operated at camera recording (At playback, it cannot be operated.)

Before operation, draw the shape of the portion in which the picture is recorded (pattern) with a deep color in thick letters. (See "To make a desired title card" on page 126.)

K-3

1 Set the DIGITAL EFFECT switch to ON.
2 Set the recorder in the recording pause mode.
3 Press the TITLE 1 (or 2) button.
4 Memorize the pattern.
5 Point the recorder to the subject for the still picture and press the PICTURE button. The portion except the pattern will be frozen.
6 Start recording. The picture will be recorded in the memorized pattern.

To stop the digital still picture superimpose
Press the PICTURE button again or the CLEAR button (on the side panel). The still picture will be cleared and the normal recording will be continued.

To make the pattern
A print or signboard with strong contrast can be memorized for the pattern.
The portion of low saturation will be memorized for the pattern.
By using the title reverse function, the portion of high saturation will be memorized for the pattern.

Note
When other digital picture button is pressed, the digital still picture superimpose function will be cleared.

K-4

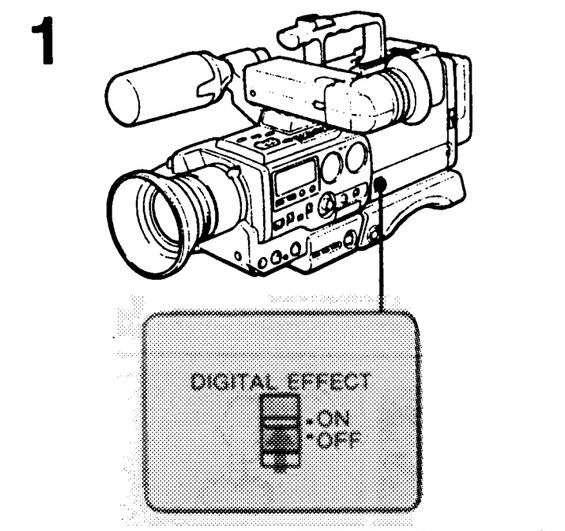

Viewing Digital Pictures

To Record a New Scene Gradually from the Last Recorded Scene

— Overlap [K-4]

This function can be operated at camera recording (At playback, it cannot be operated.)

1 Set the DIGITAL EFFECT switch to ON.
2 After recording the scene to be overlapped, set the recorder in the recording pause mode.
3 Press the FADER/OVERLAP button **twice**.
4 Start recording.

To stop the overlap before operation
Press the FADER/OVERLAP button **once**.

After the overlap is executed
The overlap function will be cleared automatically.

The OVLP indication will blink inside the viewfinder in the following cases
- The DIGITAL EFFECT switch has been set to ON during recording.
- Other digital picture button has been pressed.

When the OVLP indication blinks, the overlap function cannot be used.
To operate the overlap function, find the last scene with the EDITSEARCH button and then press the FADER/OVERLAP button **twice**.

To overlap on a scene of the recorded tape
1 Set the DIGITAL EFFECT switch to ON.
2 Set the recorder in the recording pause mode by sliding the STANDBY switch up.
3 Find the last scene to be overlapped with the EDITSEARCH button.
4 Press the FADER/OVERLAP button **twice**.
5 Start recording.

Notes
- When other digital picture button is pressed, the overlap function will be cleared.
- When the START/STOP button is pressed, the picture may be disturbed momentarily. This is not a failure of the unit.

K-5

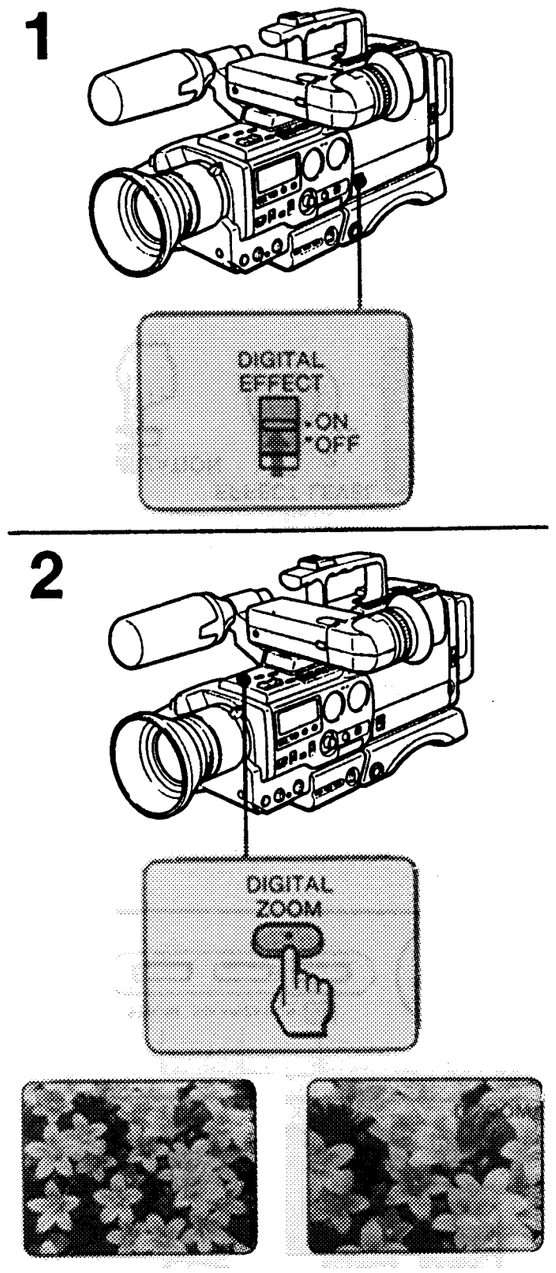

Viewing Digital Pictures

To Zoom up the Center Portion of the Picture Twice

— **Digital Zoom** [K-5]

To zoom up during recording
Set the POWER switch to CAMERA.
1 Set the DIGITAL EFFECT switch to ON.
2 During recording, press the DIGITAL ZOOM button at the point where you zoom up the subject.

To zoom up during playback
1 Set the POWER switch to VTR and play back the tape.
2 Set the DIGITAL EFFECT switch to ON.
3 During playback, press the DIGITAL ZOOM button at the point of the subject where you want to zoom up.

When the picture which is zoomed up twice at camera recording is zoomed up twice by pressing the ZOOM button at playback, you can view the picture four time as large as that of the real subject.

To stop the digital zoom
Press the DIGITAL ZOOM button again or the CLEAR button (on the side panel).

K-6

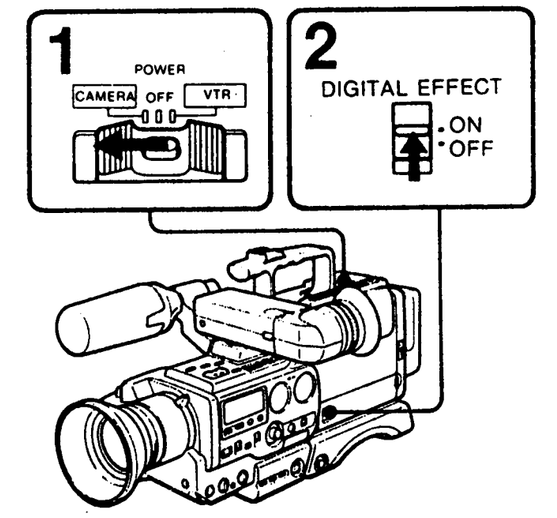

To Record a New Scene or View the Playback Picture in the Small Picture in the Still Picture

— Picture in Still

To record a small new scene in the still picture K-6

1 Set the POWER switch to CAMERA.
2 Set the DIGITAL EFFECT switch to ON.
3 Set the recorder in the recording pause mode.
4 Point the camera towards the subject which you want to make in the still picture and press the P in S button.
The small picture will appear in the lower right position of the still picture.
5 Start recording.
The new scene will be recorded in the small picture.

To view the small playback picture in the still picture

1 Set the POWER switch to VTR and play back the tape.
2 Press the P in S button in the desired scene.
The scene when the P in S button is pressed will be frozen and the following scene will be viewed in the small picture.

To stop the picture in still

Press the P in S button again or the CLEAR button (on the side panel). The small picture will be cleared and normal playback will be continued.

Note

When other digital picture button is pressed. the picture in still function will be released.

K-7

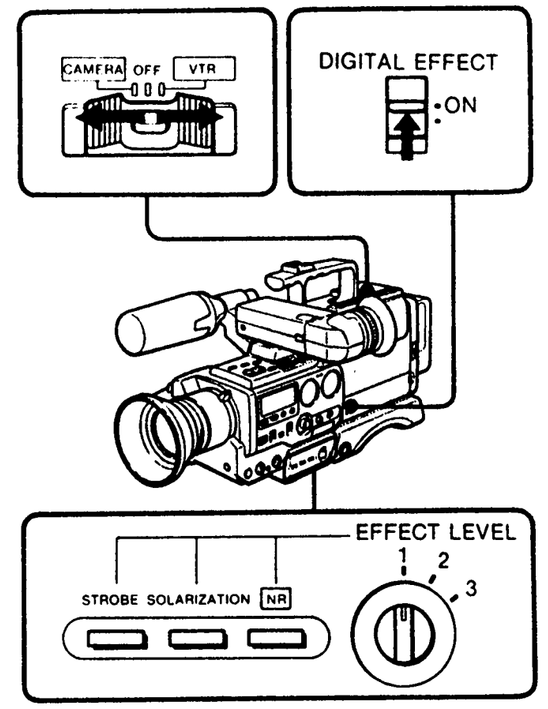

Strobe/Solarization/Noise Reduction K-7

This function can be operated at camera recording and at playback.
Set the POWER switch to CAMERA or VTR and set the DIGITAL EFFECT switch to ON.

To record or play back the moving white object with the after-image — Strobe K-8
Press the STROBE button.

The level of the strobe effect can be changed with the EFFECT LEVEL control.
When the EFFECT LEVEL control is set to 3. the level is increased to the maximum.

To record or play back a picture with a solarization effect — Solarization K-9
Press the SOLARIZATION button.

The level of the solarization effect can be changed with the EFFECT LEVEL control.
When the EFFECT LEVEL control is set to 3. the level is increased to the maximum.

To record or play back a picture with reduced noise — Noise Reduction K-10
Press the NR button.

Set the EFFECT LEVEL control to change the effect.

K-8

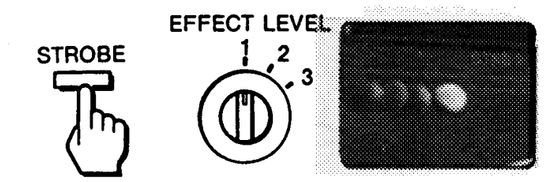

K-9

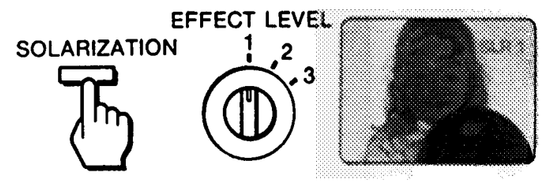

K-10

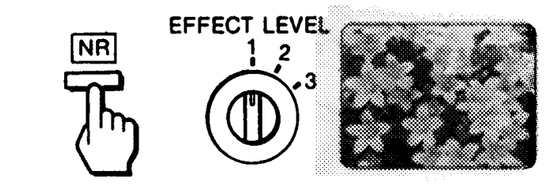

Viewing Digital Pictures

Stop Motion/Flash Motion/Multi-Picture

This function can be operated at camera recording and the playback.
Set the POWER switch to CAMERA or VTR and set the DIGITAL EFFECT switch to ON. K-11

To freeze a picture — Stop Motion
Press the STOPMOTION button. K-12

To record or play back still pictures successively at specific intervals — Flash Motion
Press the FLASHMOTION button. K-13

By pressing the FLASHMOTION button, the intervals at which the still picture is switched are changed.

To record or play back 9 frames picture on the screen — Multi-Picture
Press the MULTI button. K-14

To stop the digital picture K-15
Press the CLEAR button (on the side panel).

When other digital picture button is pressed, the function of the pressed button will work.

K-11

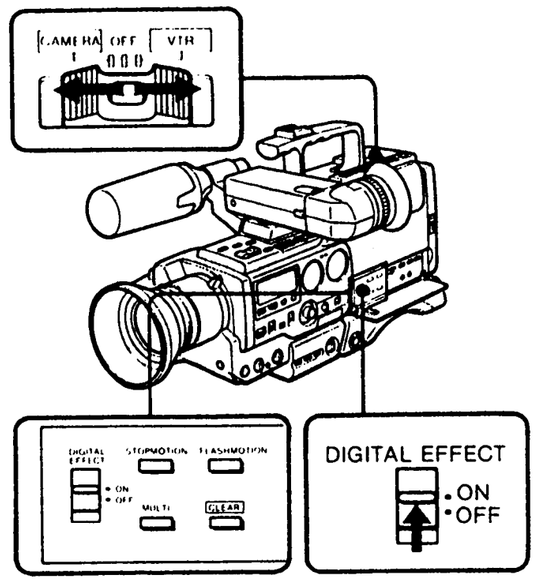

K-12

K-13

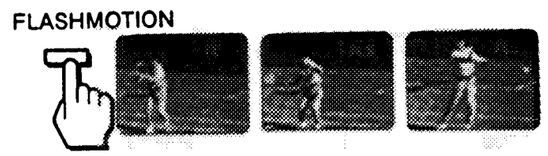

K-14

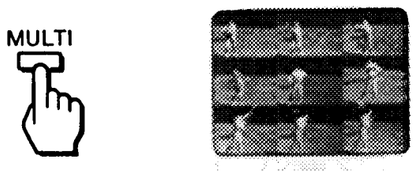

K-15

N-1

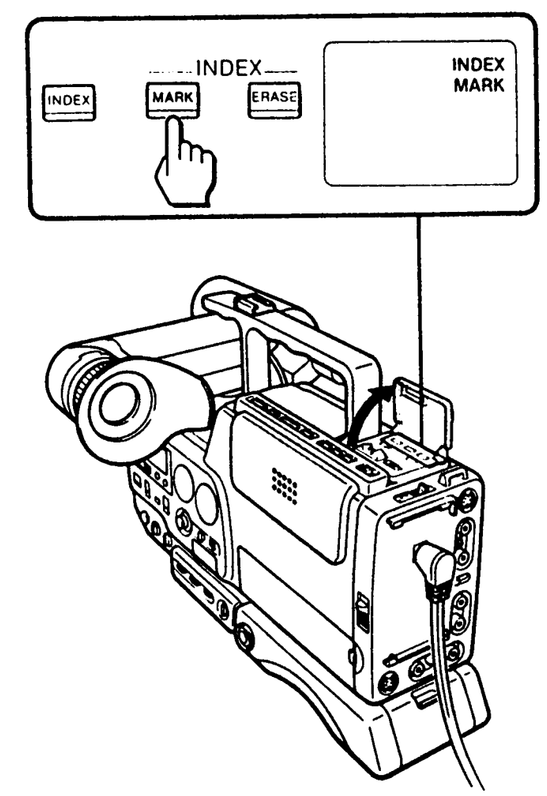

To Mark Index Signals during Playback

The desired programs can be easily located by the index signals marked on the tape.
Press the MARK button at any desired point on the tape during playback. N-1

When the index signal is marked in the playback pause mode, the index signal will be marked just after the playback pause mode is released.

Notes on marking the index signals
- The index signals can be marked at any desired point. Make sure there is more than 2 minutes of space between two index signals. If there is more than one index signal marked within an interval of 2 minutes at the normal tape speed, the unit may not function properly.
- The recorded sound cannot be heard and a black bar appears at the bottom of the playback picture while the index signal is being marked during playback. However, the recorded signals are not affected.
- The index signals cannot be registered on a cassette tape whose safety tab is slid out.
- The index signals cannot be registered in the LP mode.

N-2

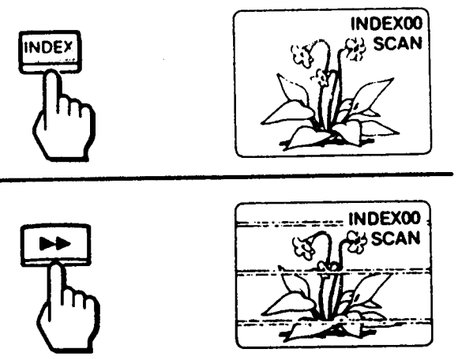

N-3

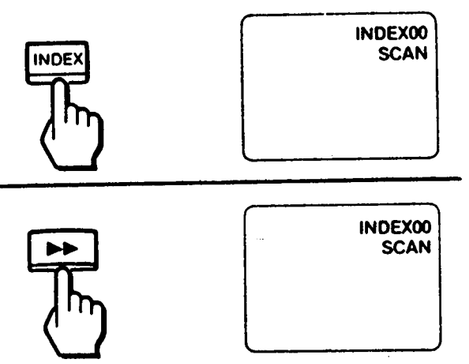

N-4

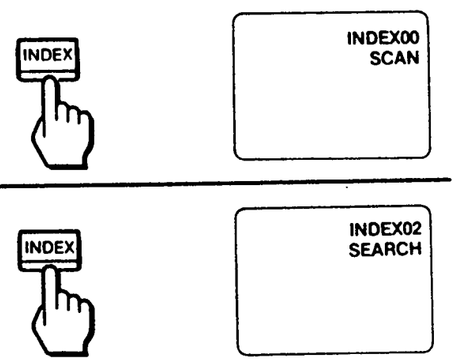

To Mark Index Signals during Playback

To Scan or Search the Program during Playback

To scan the beginning of each program during monitoring the picture — Index scan (1) N-2

1 Press the INDEX button in the playback or playback pause mode.
2 Press the ◀◀ or ▶▶ button.
The tape is played back for approximately 10 seconds at the point where the index signal is marked.
3 To continue playback, press the ▷ button.
When no button is pressed, the picture is automatically scanned to the next or previous program.

To scan the beginning of each program in sequence — Index scan (2) N-3

1 Press the INDEX button in the stop mode.
2 Press the ◀◀ or ▶▶ button.
The tape is played back for approximately 10 seconds at the point where the index signal is marked.
3 Press the ▷ button to continue playing back the desired picture.

When no button is pressed, the picture is automatically scanned to the next or previous program.

To locate the desired program — Index search N-4

1 Press the INDEX button in the stop or playback mode.
2 Press the INDEX button again until the index number of the desired program is displayed on the viewfinder screen.
3 Press the ◀◀ or ▶▶ button.
The playback is started at the beginning of the designated picture.

To correct the index number
Press the ■ button and repeat the above steps.

N-5

To Mark Index Signals during Playback

To Erase Index Signals N-5

1 Play back the beginning of the picture to be erased by index scan or index search.
2 Within approximatelly 10 seconds, while the tape is being played back, press the ERASE button.
When the index signal is erased while index scanning, the index scan is resumed.
When the index signal is erased while index searching, normal playback is begun.

Notes on erasing the index signal

- Press the ERASE button more than 2 seconds after the playback starts.
- If the safety tab on the cassette is slid out, the index signal cannot be erased.
- While an index signal is being erased, the recorded sound cannot be heard and a black bar appears at the bottom of the playback picture.
However, recorded signals are not affected.
- The index signal marked by a VCR such as the EV-S900 series can be detected with this unit but cannot be erased.
The index signal marked by this unit can be detected with a VCR such as the EV-S900 series but cannot be erased.
- When the audio is dubbed in the portion where the index signal is marked, the index signal may be erased.

O-4

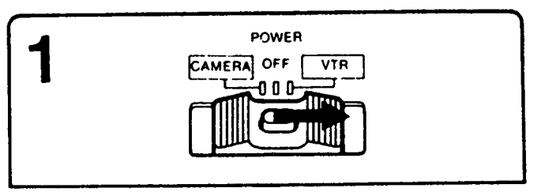

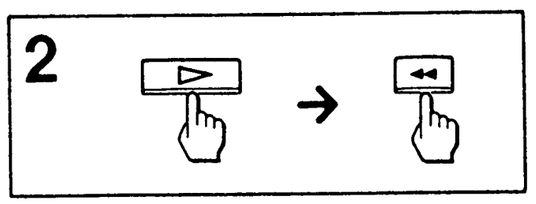

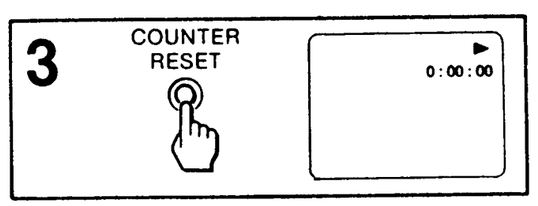

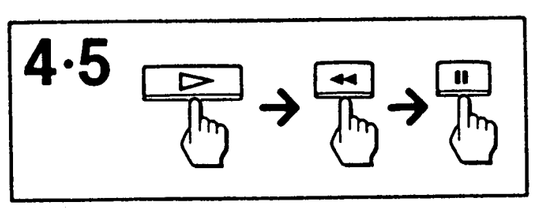

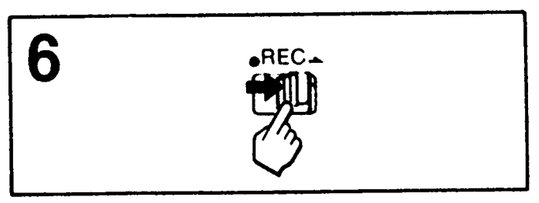

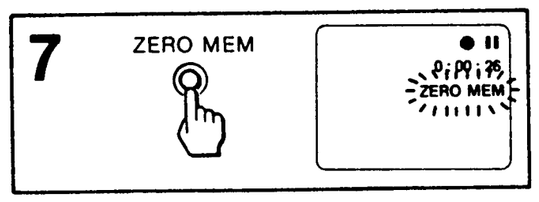

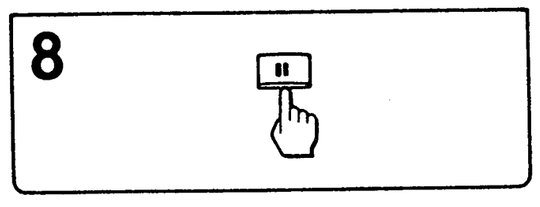

Insert Recording

To Insert a Picture or a TV Program from Another VCR O-4

Monitor the picture being inserted on the viewfinder screen.

1 While pressing the small button. set the POWER switch to VTR.
2 Locate the point on the tape where the insert should end by pressing the ◀◀ or ▶▶ button during playback.
3 Display the counter in the display window and press the COUNTER RESET button. The counter is reset to zero.
4 Press the ◀◀ button during playback to rewind the tape a little further than the point where the insert should begin.
5 Release the ◀◀ button to resume playback and press the ❚❚ button at the insert starting point.
6 Slide the ● REC switch in the arrow direction to set the unit to recording pause mode.
7 Press the ZERO MEM button. The insert ending point is stored in memory.
8 To start recording, press the ❚❚ button.

The insert recording will stop automatically near the counter zero point.

To cancel ZERO MEM mode
Press the ZERO MEM button so that the ZERO MEM indicator disappears.

O-5

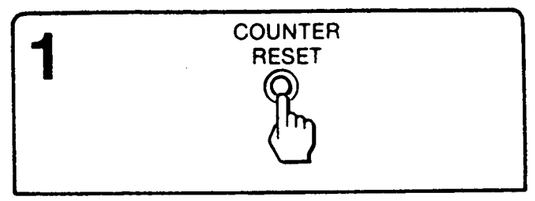

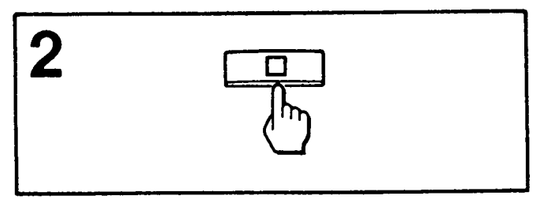

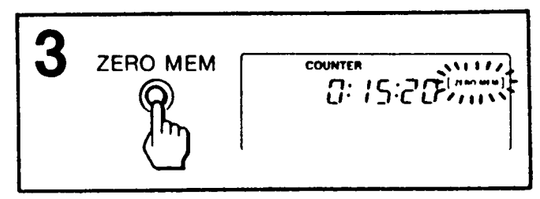

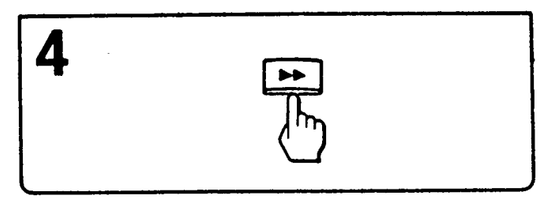

Use of the Tape Counter

During recording or playback, the digits on the counter indicate the actual recording or playback time.

To Index the Whole Tape

Press the COUNTER RESET button at the beginning of the tape so that the counter shows "0:00:00". By noting the counter reading at a particular point, you can easily find that point later by referring to the tape counter.

Notes on the counter
- The counter reading and the point of the tape may not correspond exactly. Use the counter as a guide.
- The counter does not operate for a blank, unrecorded portion of a tape.
- There will be a time lag of several seconds on the counter reading after repeated fast forward and rewind operations.
- There will be also a time lag of several seconds when the tape recorded in LP and SP modes mixed or the tape having a blank portion between the recorded portions is played back.

To Return to a Pre-registered Point O-5

1 During recording or playback, press the COUNTER RESET button at the point you later want to locate.
2 Press the ■ button when the recording or playback has finished.
3 Press the ZERO MEM button. The "ZERO MEM" indicator will blink in the display window.
4 Press the ▶▶ or ◀◀ button. The tape will be rewound or sent forward and stop automatically when the counter reaches approximately zero.

Notes on ZERO MEM button
- The ZERO MEM button does not function during recording or playback mode.
- Be sure to press the ZERO MEM button when the tape is stopped.
- The ZERO MEM mode is cancelled automatically once the tape is rewound or sent forward to zero.

Trouble Indications

If an indication blinks in the viewfinder screen or a caution lamp on the main unit blinks, check the following table.

[ ] slow blinking [ ] fast blinking

	Symptom	Cause	Corrective actions
Camera/ VTR		The battery is weak.	Prepare a charged one.
		The battery is used up.	Use a charged battery.
Camera	⏏	The tape is at its end.	Use a new tape.
		The tape is near its end.	Prepare a new one.
		No tape is inserted.	Insert a tape.
	⏏	The tab on the tape is out (red).	Slide the tab.
		• The battery is removed for more than 1 hour. • Low light • The white balance is adjusted with a suitable other than white.	Adjust the white balance correctly.
Camera/ VTR	⏏	Moisture condensation has occurred.	Remove the tape and leave the recorder for at least an hour.
	●	The gap of the head is clogged.	Clean the head using the Sony V8-25CLH video head cleaning tape.
	⊗		
	⏏	Other troubles may occur.	Consult your nearest Sony dealer.
	⊗		
	"AM 12:00:00" blinks for 5 seconds in the viewfinder after setting POWER to CAMERA. In the display window "0:00:00" or bar indication blinks.	The lithium battery is not installed. The lithium battery is exhausted.	Install the lithium battery.
	The current time blinks for 5 seconds in the viewfinder after setting POWER to CAMERA. In the display window the counter, date/time indication blinks.	The lithium battery is weak.	Use a new battery.

Indications in the Display Window

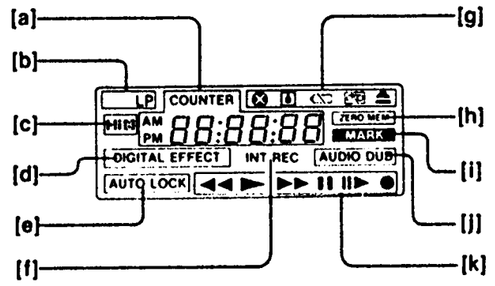

[a] Time/date/counter indication
[b] Tape speed indication
[c] High eight mode indication
[d] DIGITAL EFFECT indication
[e] AUTO LOCK indication
[f] Indicates during interval recording.
[g] Caution indications
[h] ZERO MEM (memory) indication
[i] Lights when the index signal is marked.
[j] Indicates during audio dubbing.
[k] Shows the VCR operation mode.

Indications Inside the Viewfinder

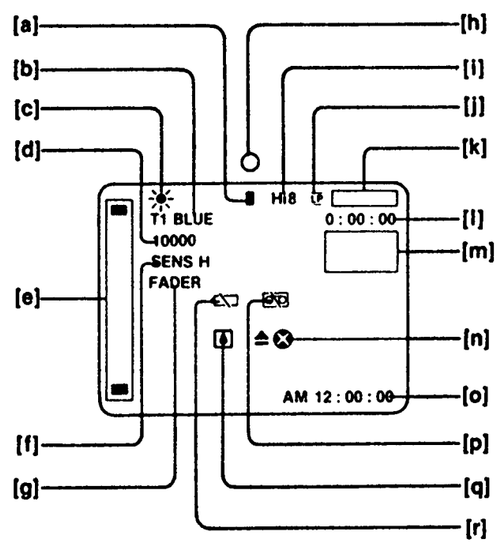

[a] Lights when the focus is adjusted manually
[b] Title number and color indication
[c] Lights when the white balance is adjusted manually.
[d] Shutter speed indication
[e] Lights when the iris is controlled manually
[f] Lights when the SENS button is pressed
[g] FADER/OVERLAP indication
[h] Camera recording lamp
[i] High 8 mode indication
[j] Indicates the playback mode (LP)
[k] In the VCR operation mode, this indicates the tape transport function.
[l] Tape counter
[m] ZERO MEM/INDEX mode/digital picture mode indication
[n] Caution indication
[o] Date/time
[p] Tape indication
[q] Dew indication
[r] Battery indication

SECTION 2
DISASSEMBLY

2-1. REMOVAL OF CABINET (LOWER) ASSEMBLY

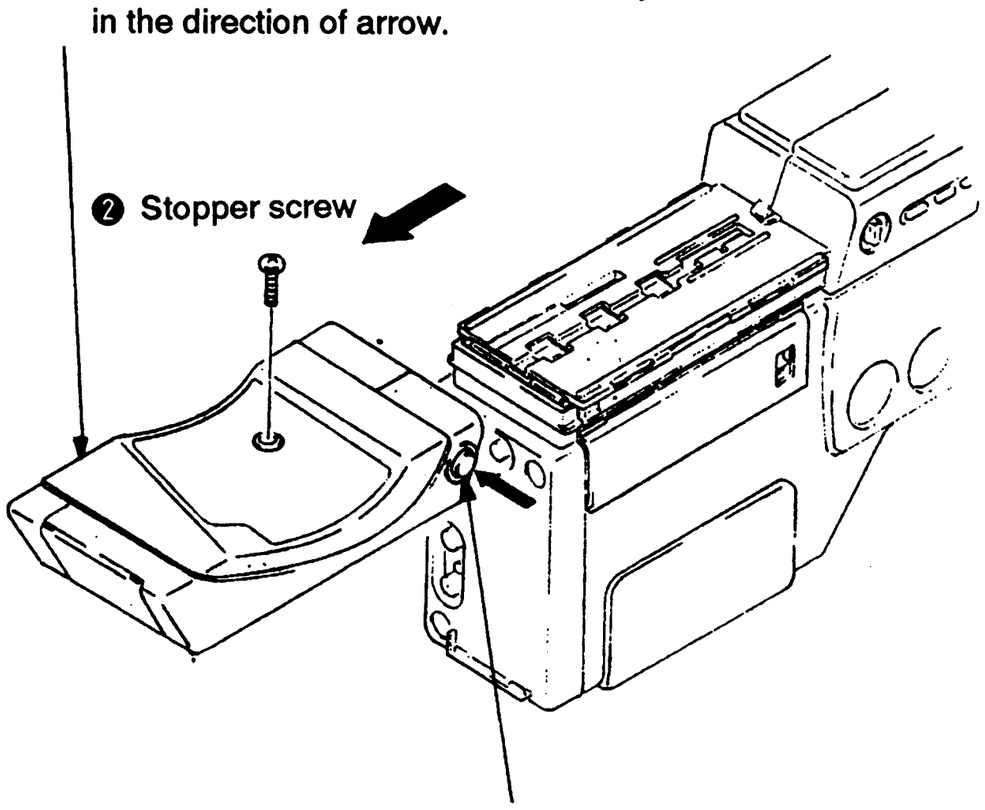
❸ Remove the cabinet (lower) assembly in the direction of arrow.
❷ Stopper screw
❶ Slide the cabinet (lower) assembly with PUSH SLIDE button pressed.

2-2. REMOVAL OF CASSETTE LID ASSEMBLY

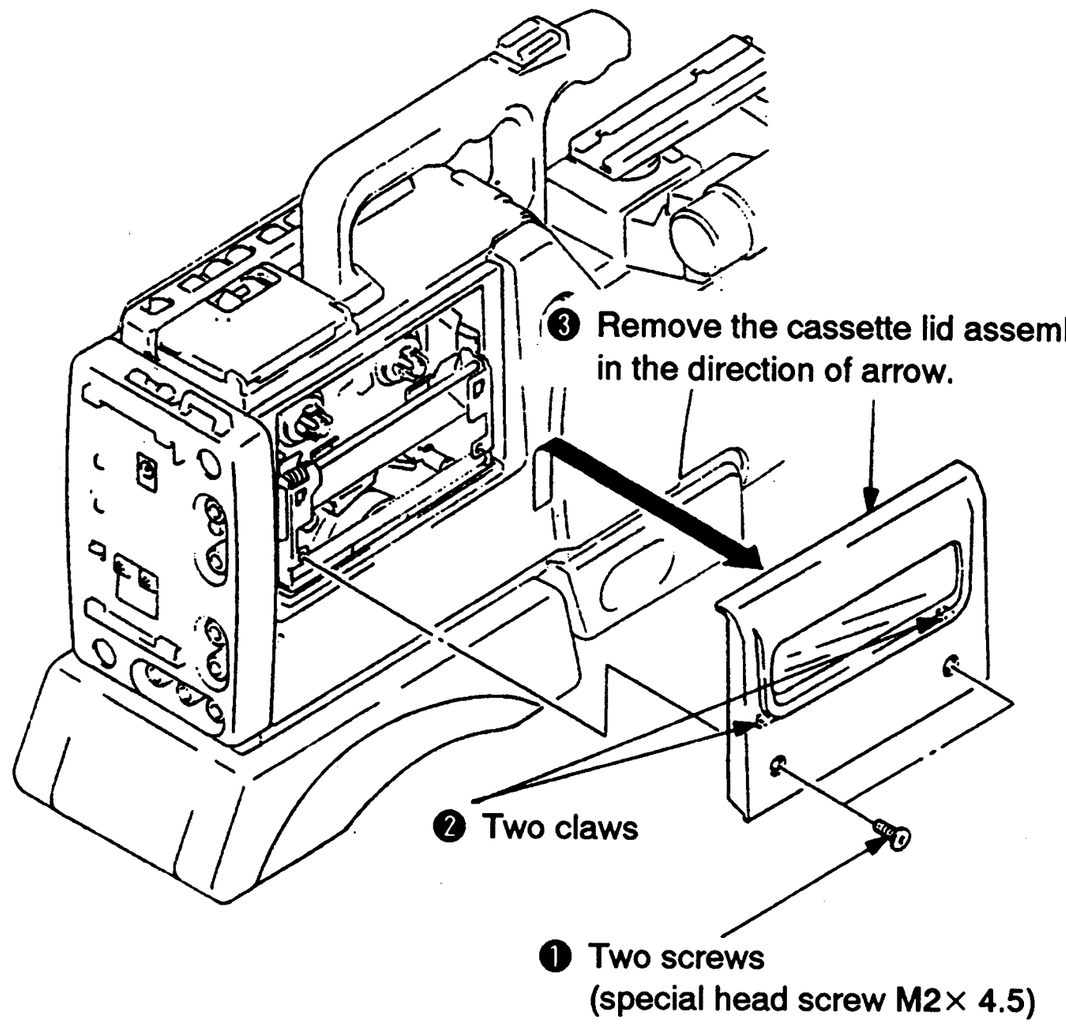

2-3. REMOVAL OF CABINET (REAR) ASSEMBLY

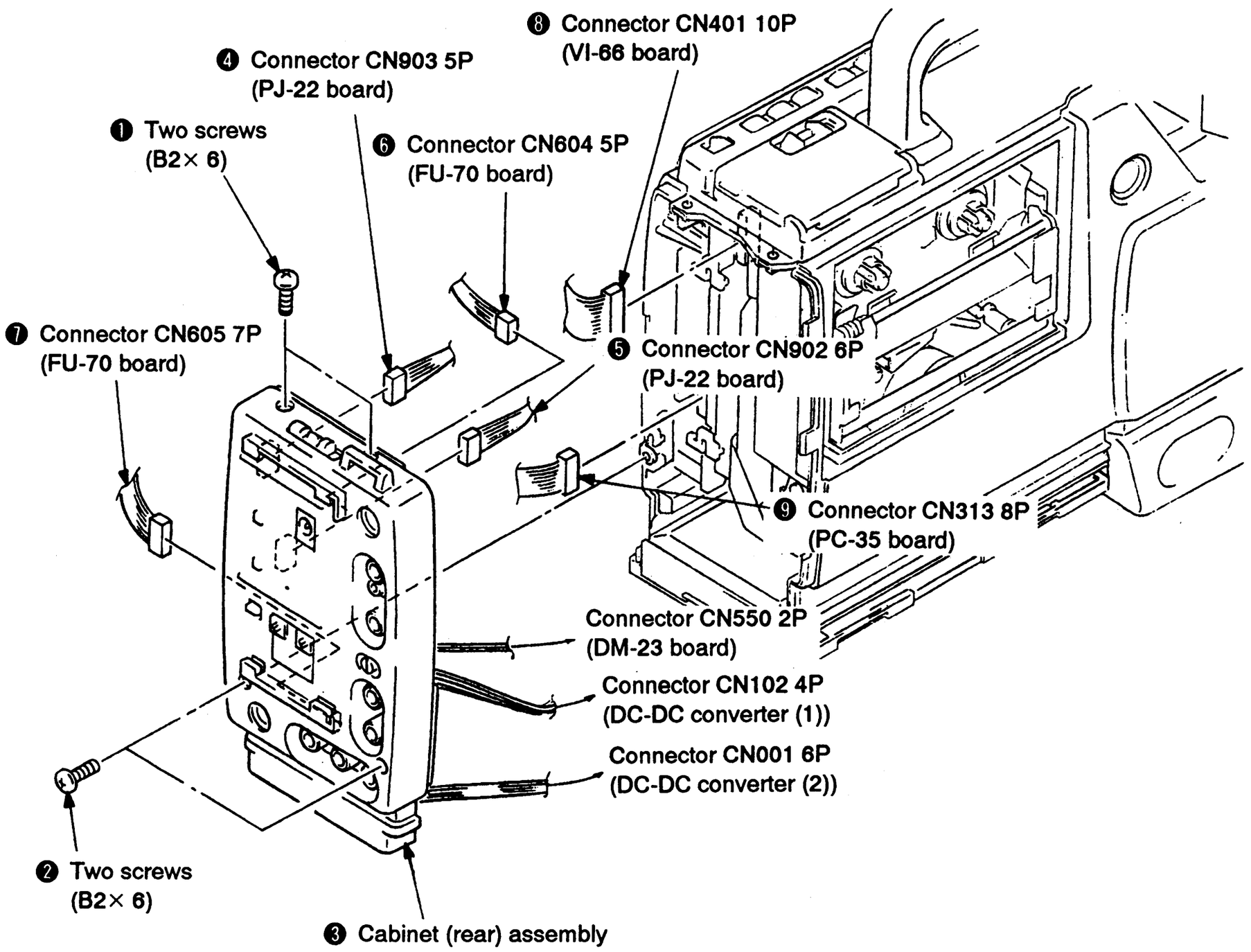
❽ Connector CN401 10P (VI-66 board)
❹ Connector CN903 5P (PJ-22 board)
❶ Two screws (B2× 6)
❻ Connector CN604 5P (FU-70 board)
❼ Connector CN605 7P (FU-70 board)
❺ Connector CN902 6P (PJ-22 board)
❾ Connector CN313 8P (PC-35 board)
Connector CN550 2P (DM-23 board)
Connector CN102 4P (DC-DC converter (1))
Connector CN001 6P (DC-DC converter (2))
❷ Two screws (B2× 6)
❸ Cabinet (rear) assembly

2-4. REMOVAL OF CABINET (UPPER) ASSEMBLY

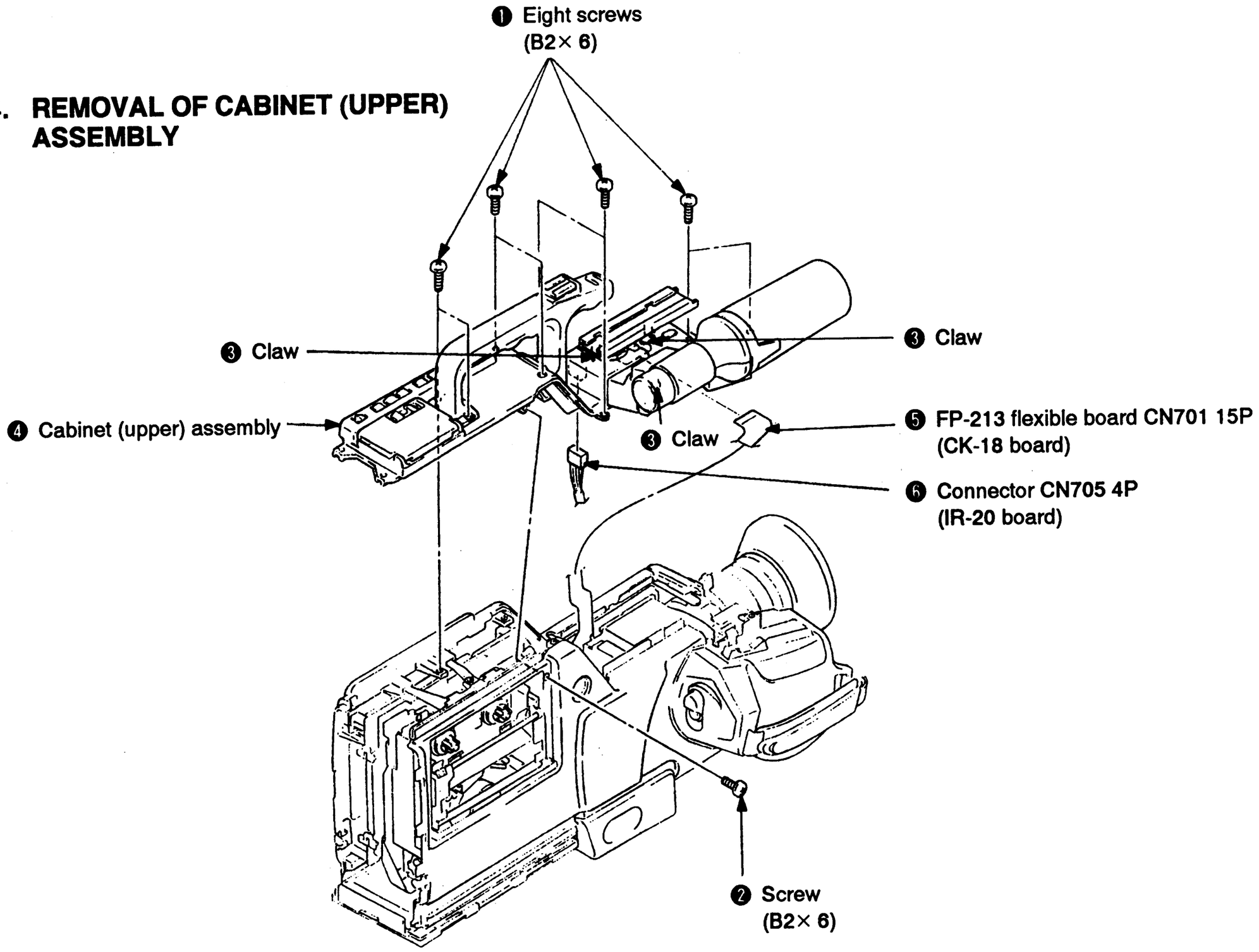

2-5. REMOVAL OF CABINET (L) ASSEMBLY

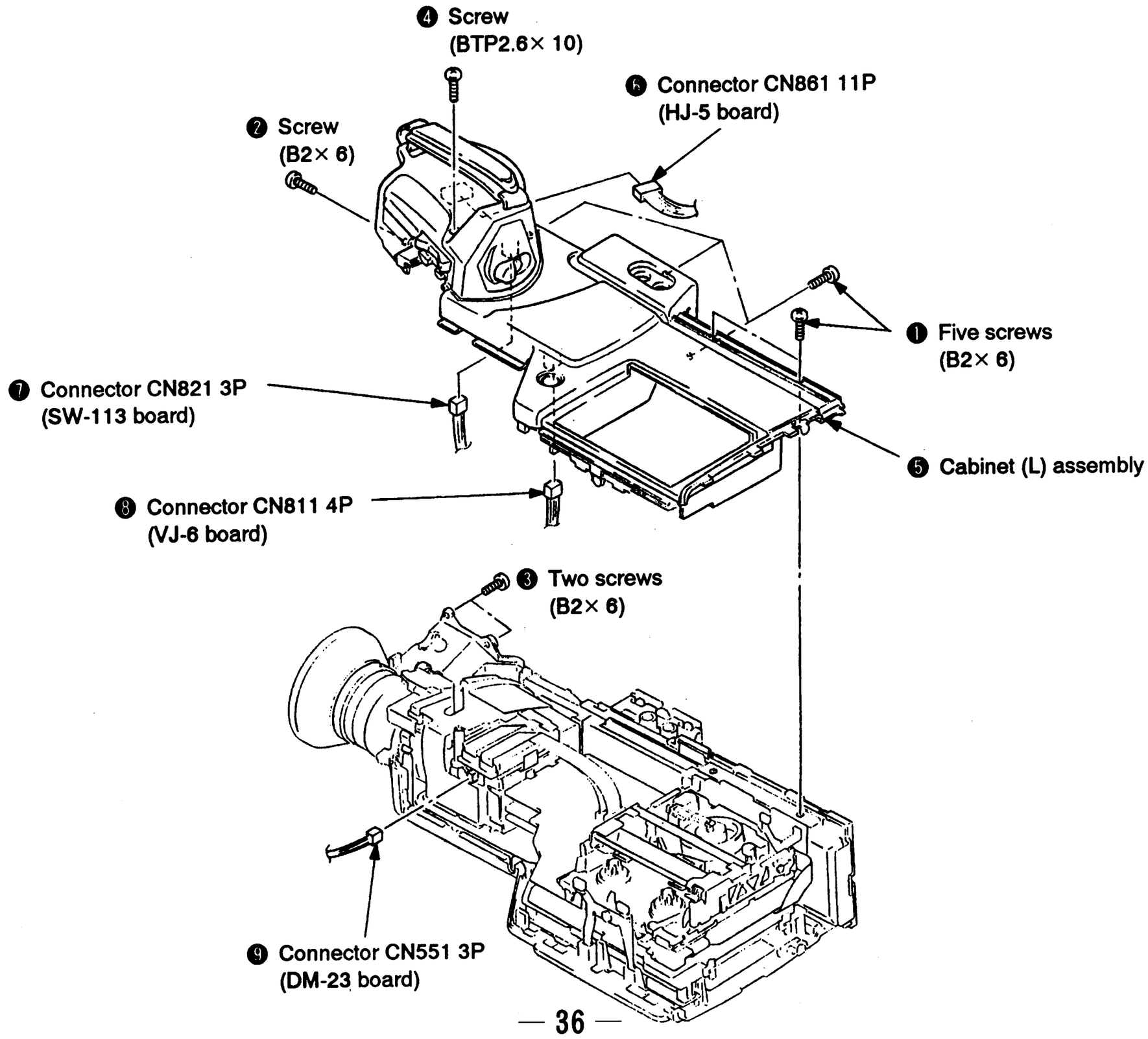

2-6. REMOVAL OF CAMERA BLOCK ASSEMBLY AND VTR BLOCK ASSEMBLY

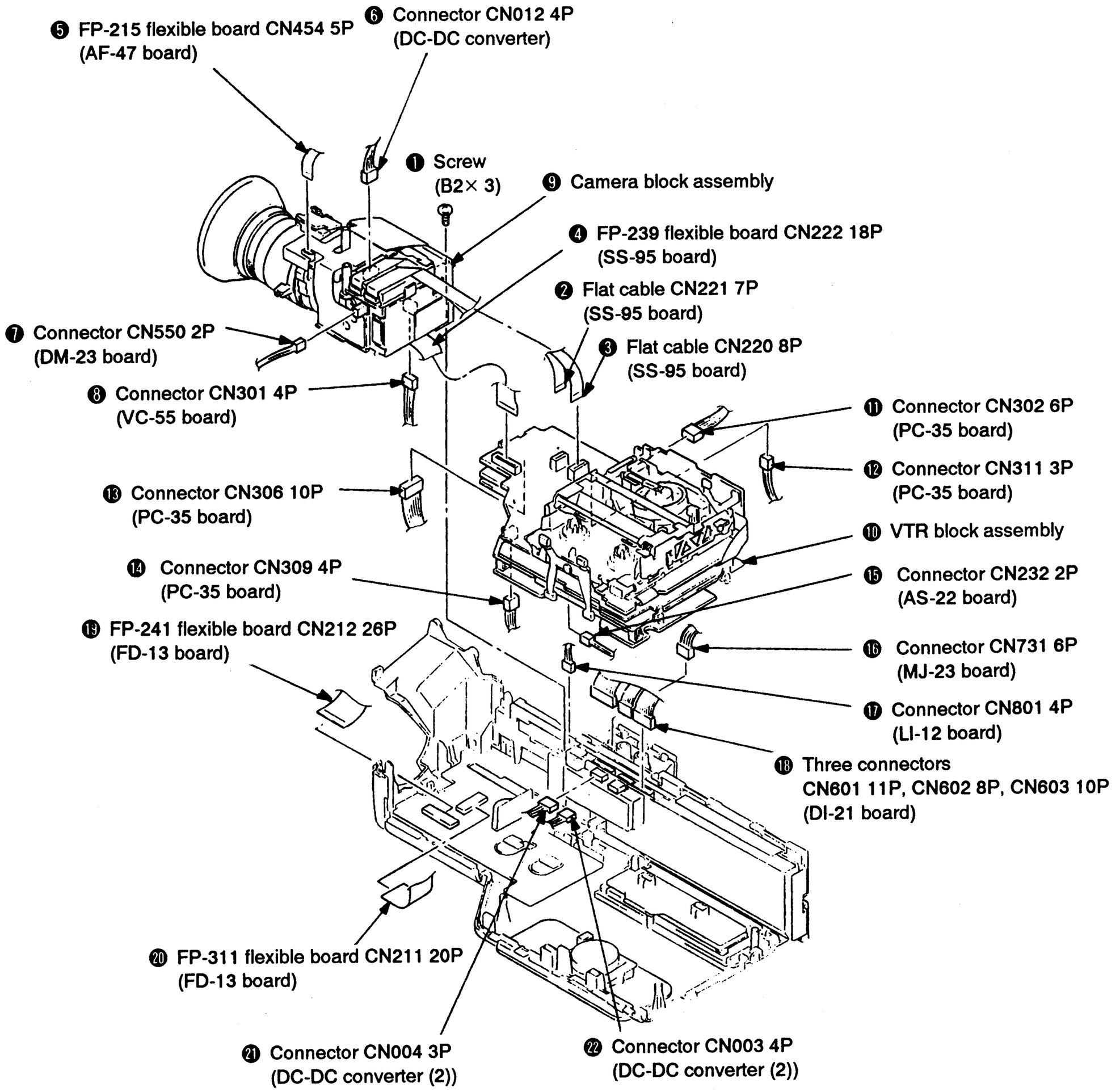

2-7. REMOVAL OF CABINET FRAME ASSEMBLY (DC-DC CONVERTER UNIT)

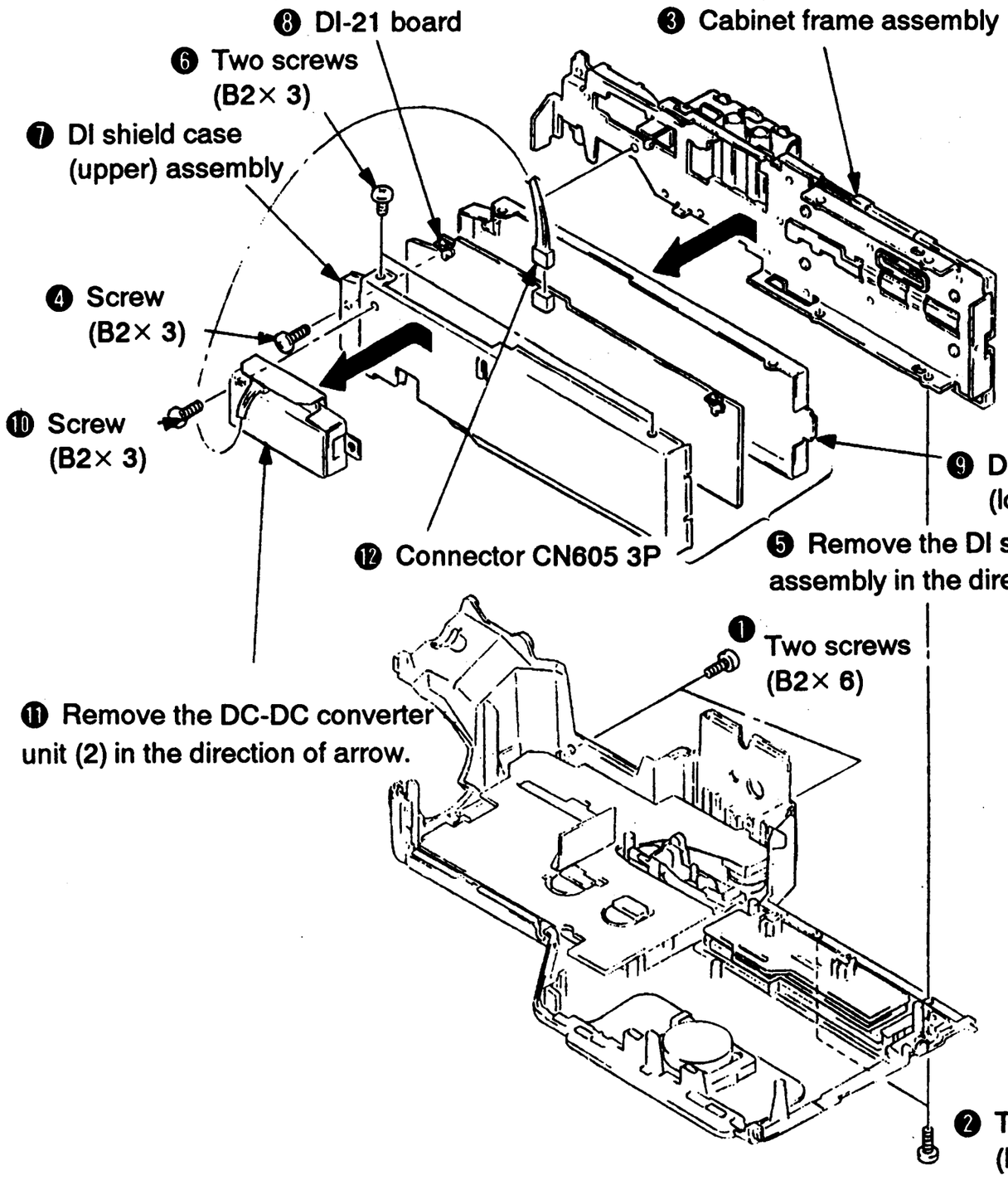
❽ DI-21 board
❸ Cabinet frame assembly
❻ Two screws (B2× 3)
❼ DI shield case (upper) assembly
❹ Screw (B2× 3)
❿ Screw (B2× 3)
❾ DI shield case (lower)
⓬ Connector CN605 3P
❺ Remove the DI shield case assembly in the direction of arrow.
⓫ Remove the DC-DC converter unit (2) in the direction of arrow.
❶ Two screws (B2× 6)
❷ Two screws (B2× 6)

2-8. OPENING OF AS-22 BOARD

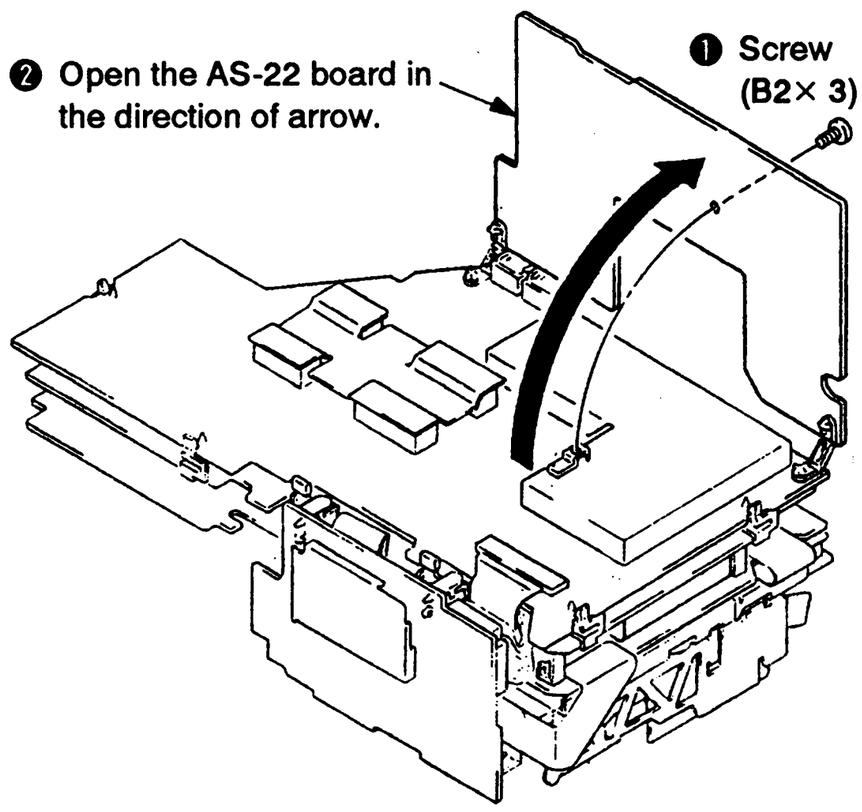

2-9. OPENING OF PC-35 BOARD

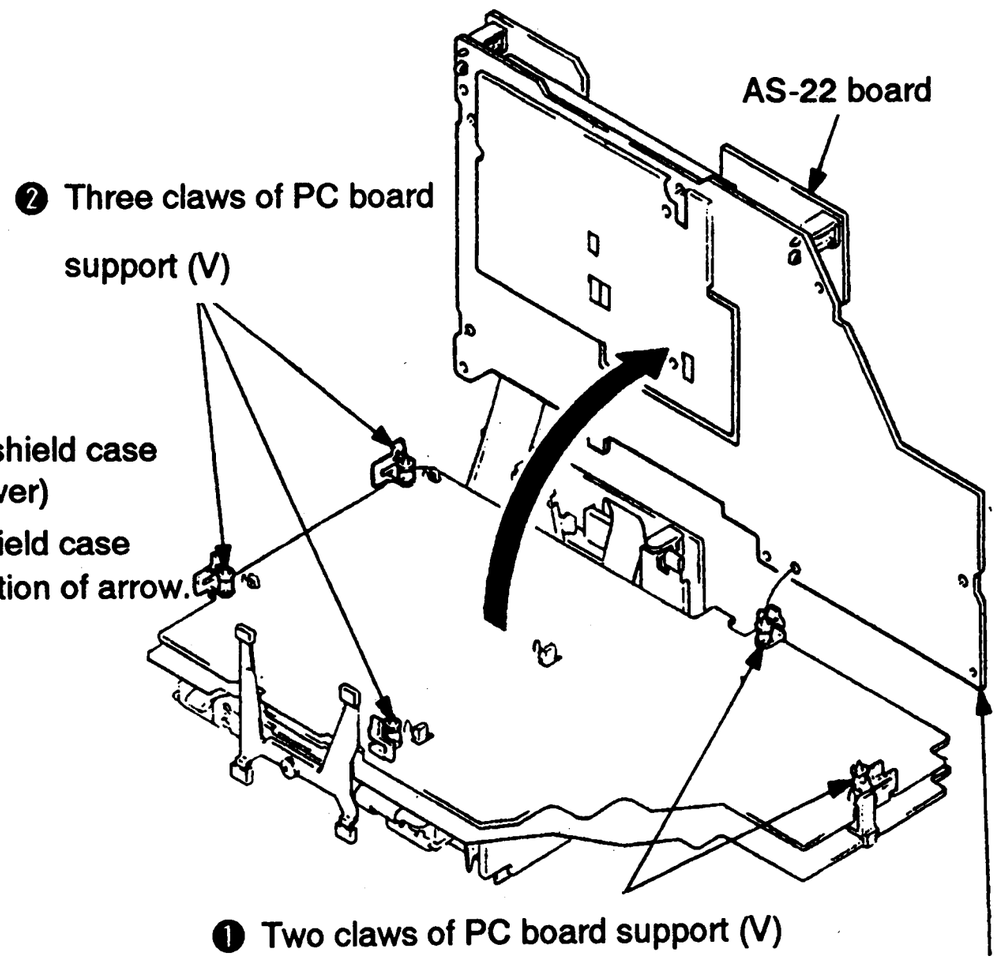
AS-22 board
❷ Three claws of PC board support (V)
❶ Two claws of PC board support (V)
❸ Open the PC-35 board in the direction of arrow.

2-10. OPENING OF VI-66 BOARD

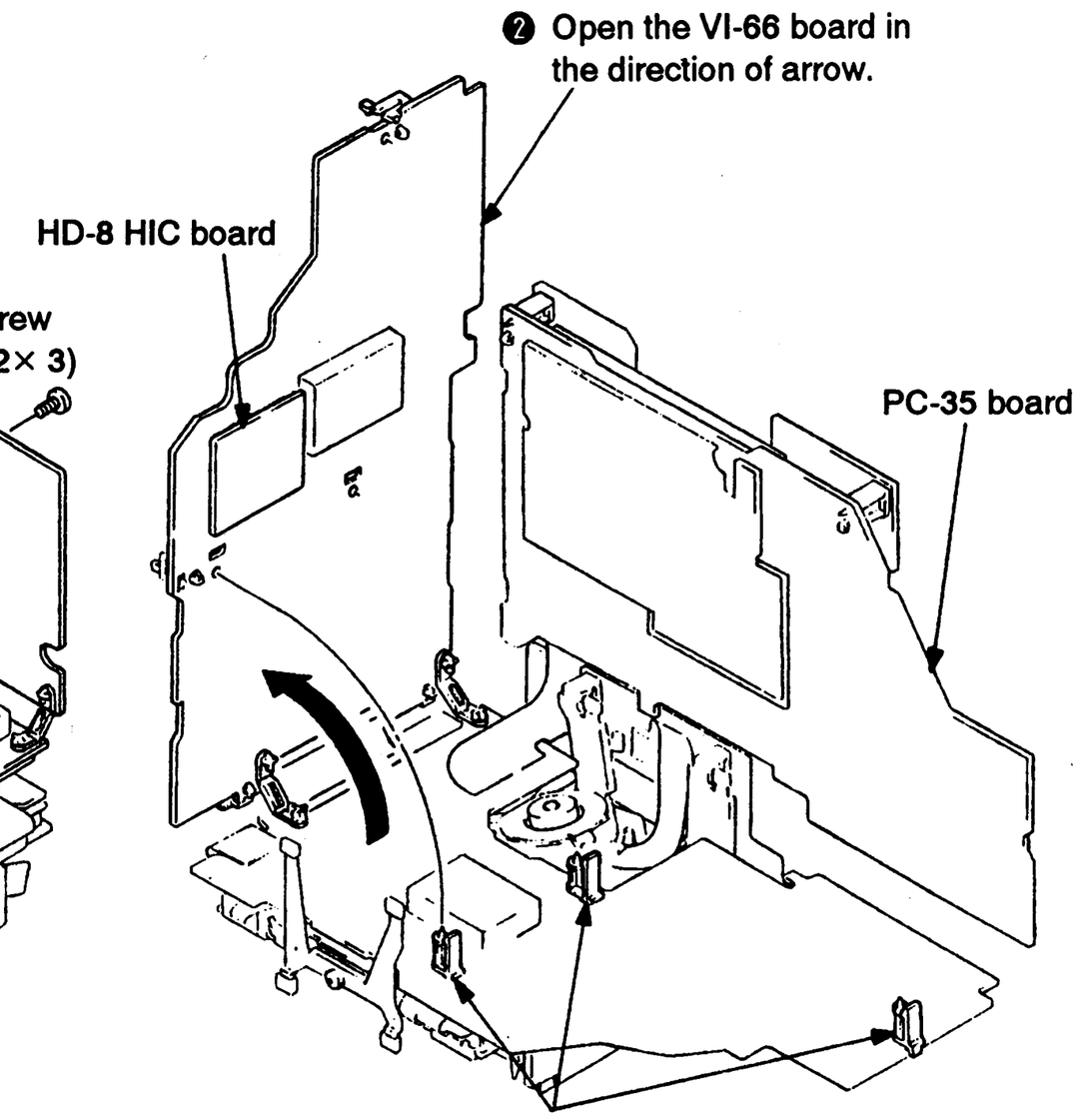

2-11. REMOVAL OF SS-95 BOARD

Note: Perform servicing with the MR-19 board open.
(Refer to "2-12. Opening of MR-19 Board".)

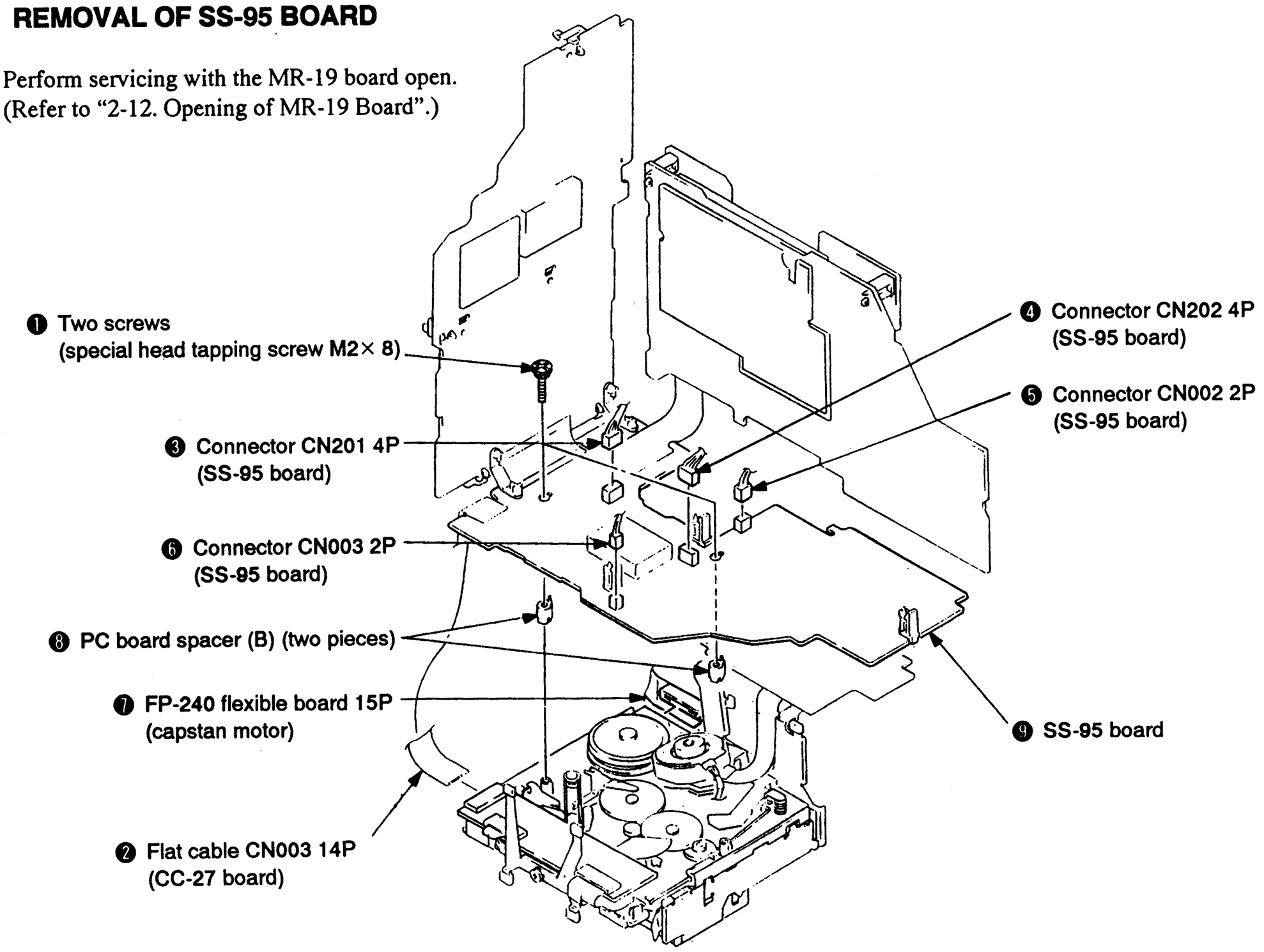

2-12. OPENING OF MR-19 BOARD

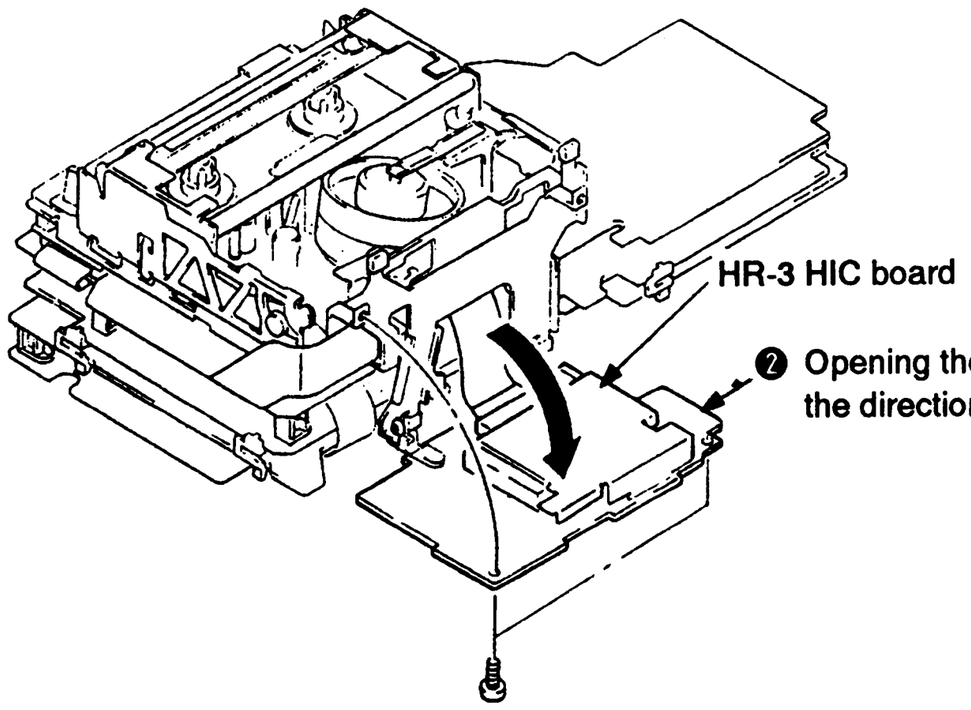

2-13. REMOVAL OF DC-DC CONVERTER UNIT (CAMERA)

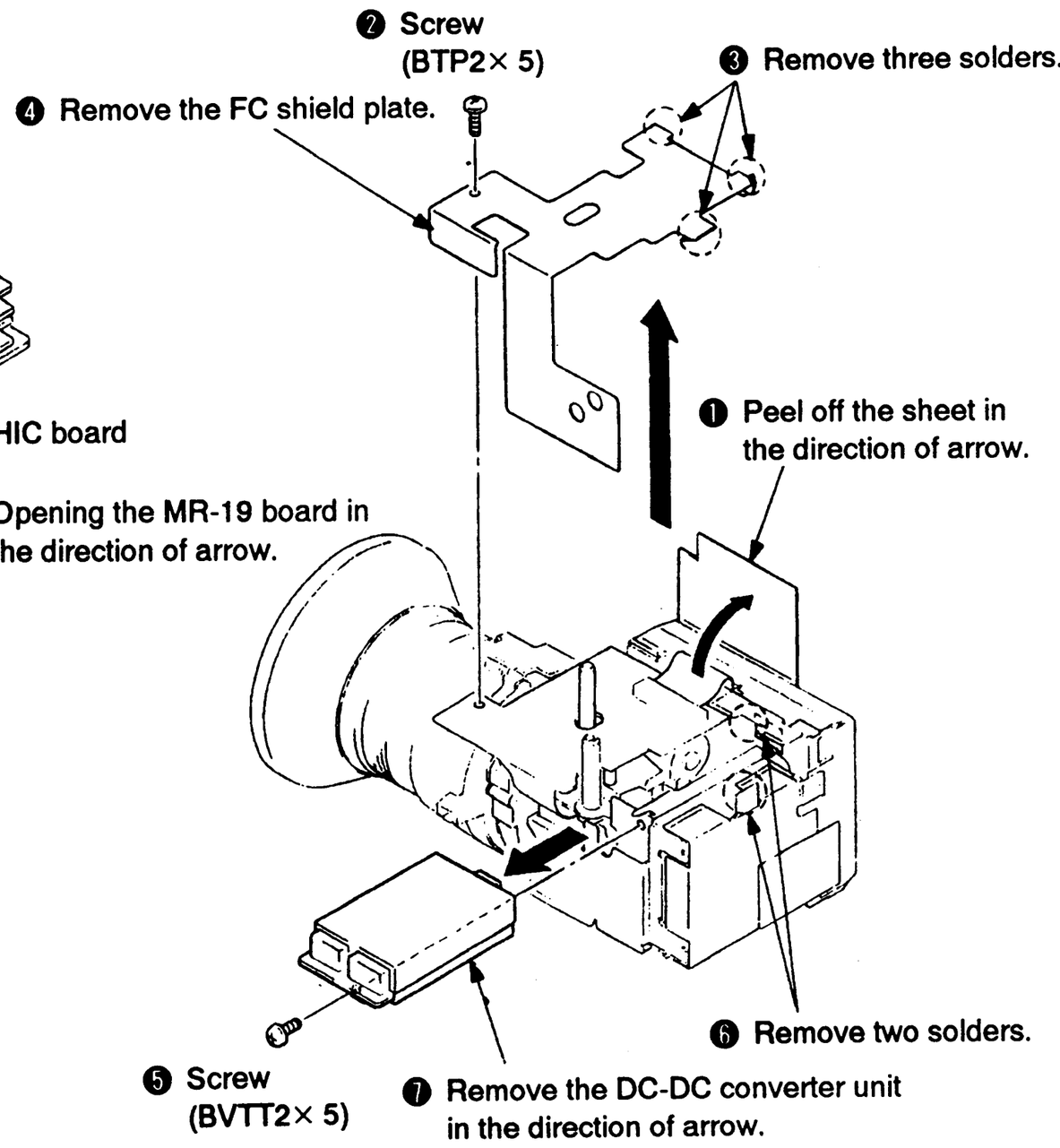

2-14. OPENING VC-55 BOARD

Note: Remove solders on the camera shield lid assembly.
(Refer to "2-13. Removal of DC-DC Converter Unit".)

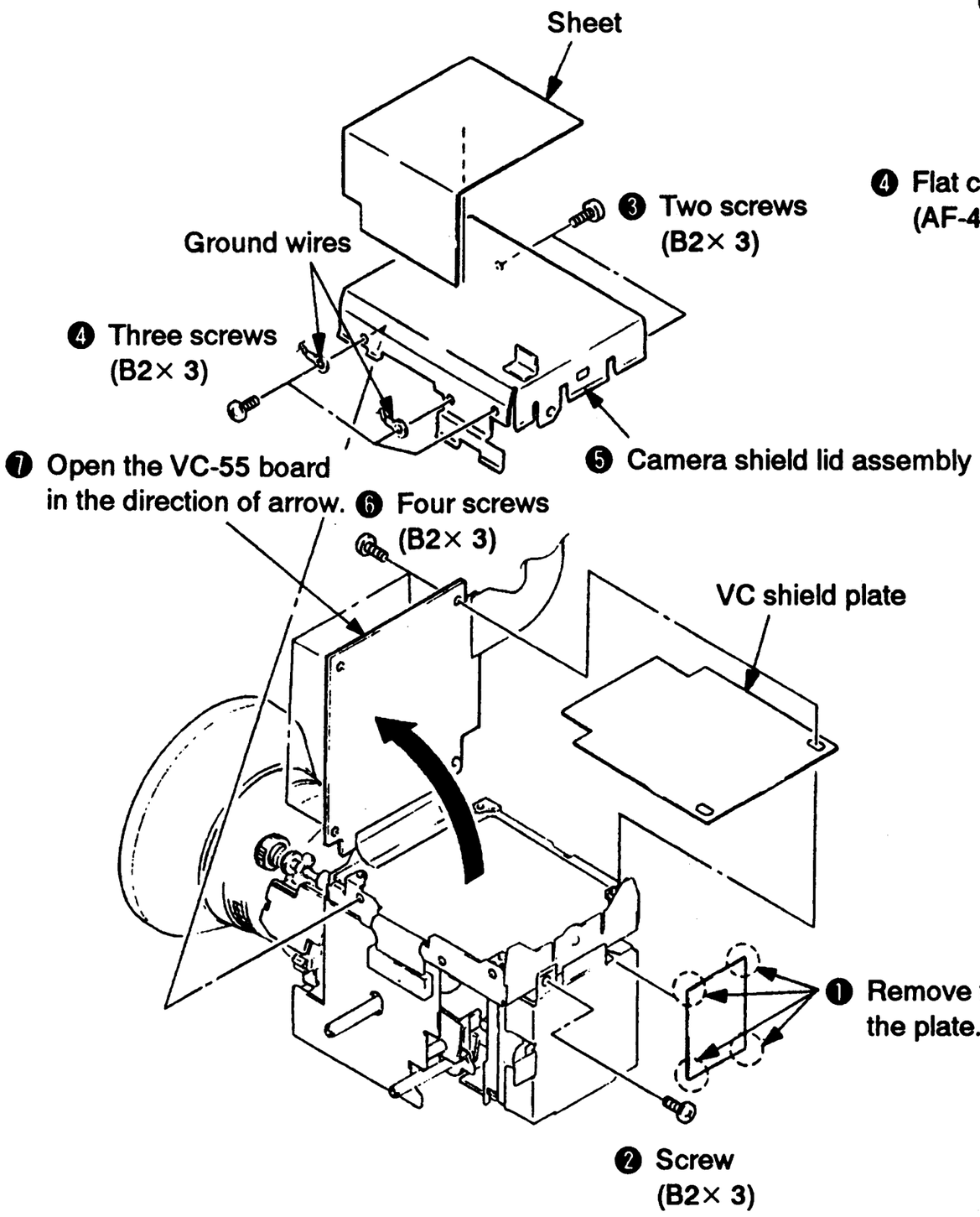
Sheet
❸ Two screws (B2× 3)
Ground wires
❹ Three screws (B2× 3)
❺ Camera shield lid assembly
❼ Open the VC-55 board in the direction of arrow.
❻ Four screws (B2× 3)
VC shield plate
❶ Remove four solders and the plate.
❷ Screw (B2× 3)

2-15. REMOVAL OF VC-54 AND VC-55 BOARDS

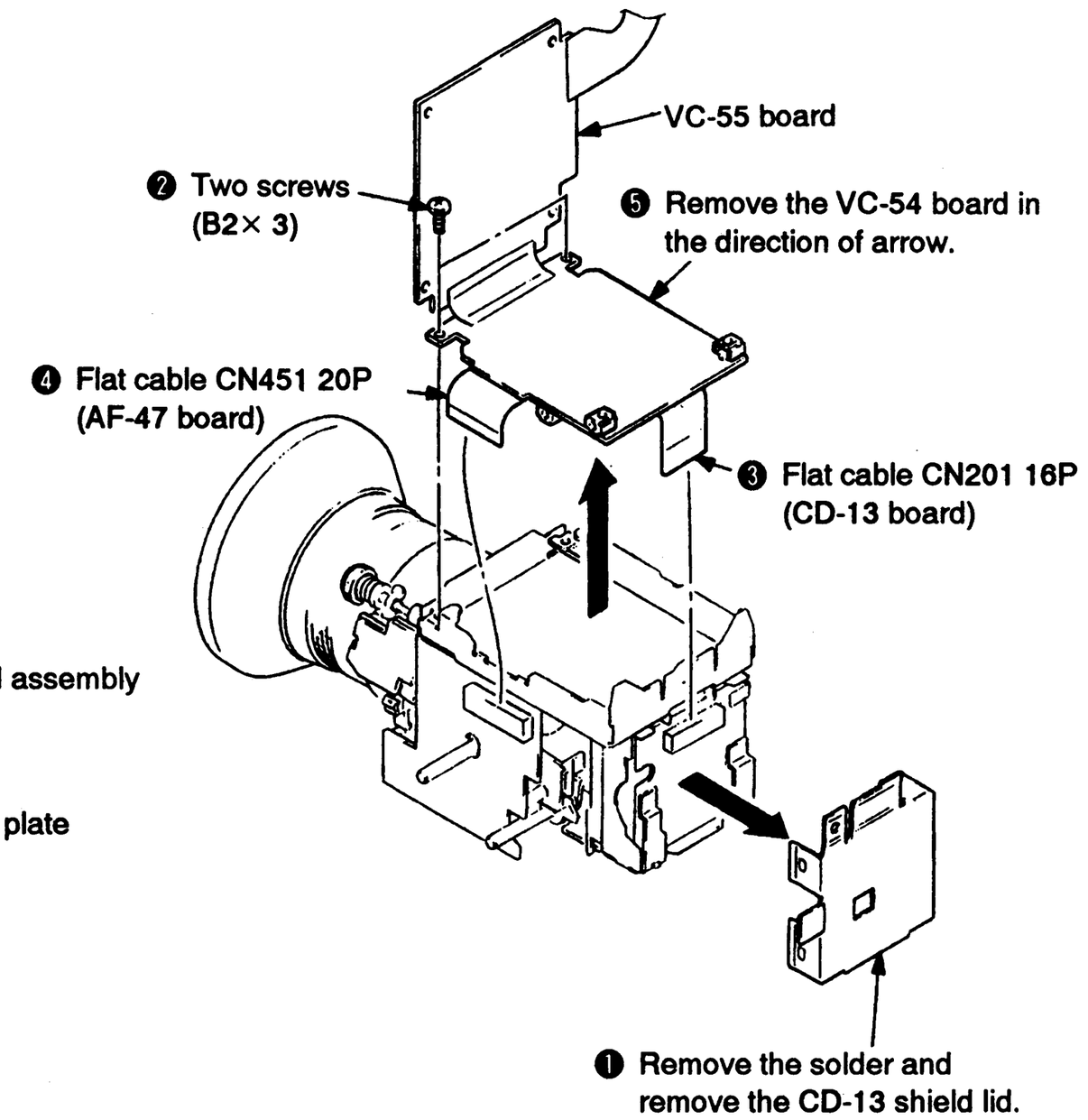
VC-55 board
❷ Two screws (B2× 3)
❺ Remove the VC-54 board in the direction of arrow.
❹ Flat cable CN451 20P (AF-47 board)
❸ Flat cable CN201 16P (CD-13 board)
❶ Remove the solder and remove the CD-13 shield lid.

2-16. REMOVAL OF CD-13 BOARD (REMOVAL OF CCD IMAGER)

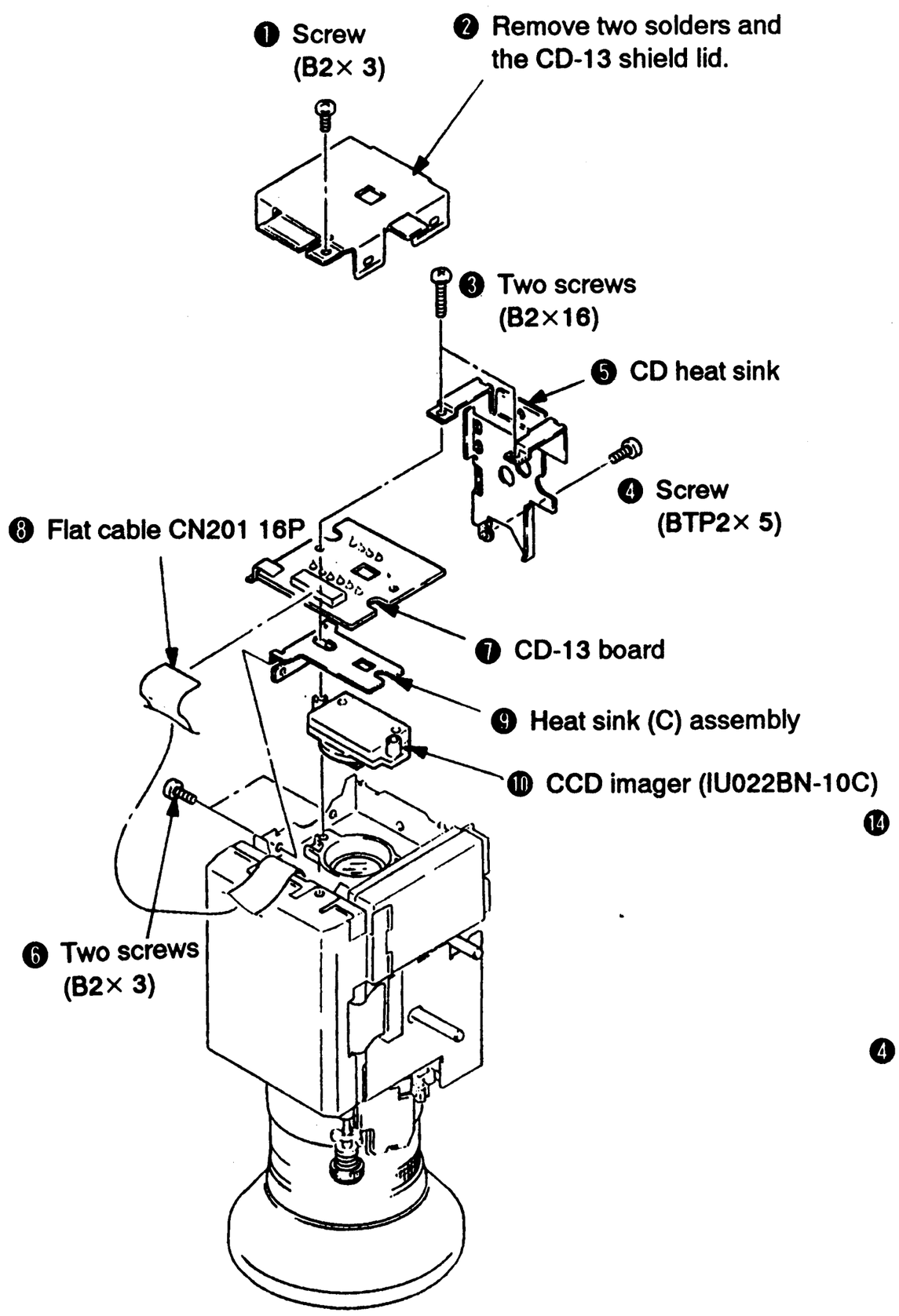
❶ Screw (B2× 3)
❷ Remove two solders and the CD-13 shield lid.
❸ Two screws (B2×16)
❺ CD heat sink
❹ Screw (BTP2× 5)
❽ Flat cable CN201 16P
❼ CD-13 board
❾ Heat sink (C) assembly
❿ CCD imager (IU022BN-10C)
❻ Two screws (B2× 3)

2-17. REMOVAL AF-DM ASSEMBLY

Note: Remove the DC-DC converter and the FC shield plate before servicing.
(Refer to "2-13. Removal DC-DC Converter Unit".)

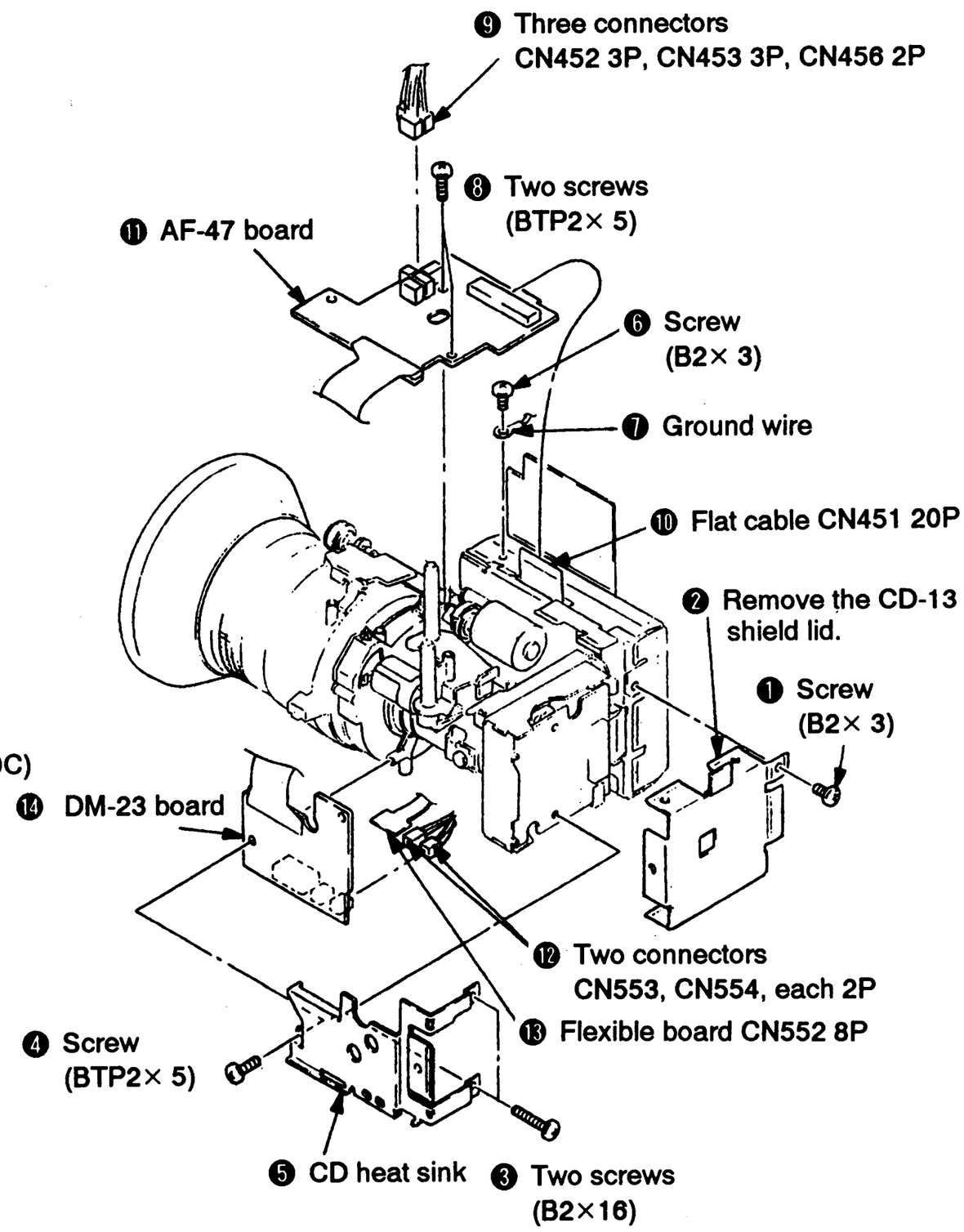
❾ Three connectors CN452 3P, CN453 3P, CN456 2P
❽ Two screws (BTP2× 5)
⓫ AF-47 board
❻ Screw (B2× 3)
❼ Ground wire
❿ Flat cable CN451 20P
❷ Remove the CD-13 shield lid.
❶ Screw (B2× 3)
⓮ DM-23 board
⓬ Two connectors CN553, CN554, each 2P
⓭ Flexible board CN552 8P
❹ Screw (BTP2× 5)
❺ CD heat sink
❸ Two screws (B2×16)

2-18. REMOVAL OF B/W CATHODE-RAY TUBE (EVF ASSEMBLY)

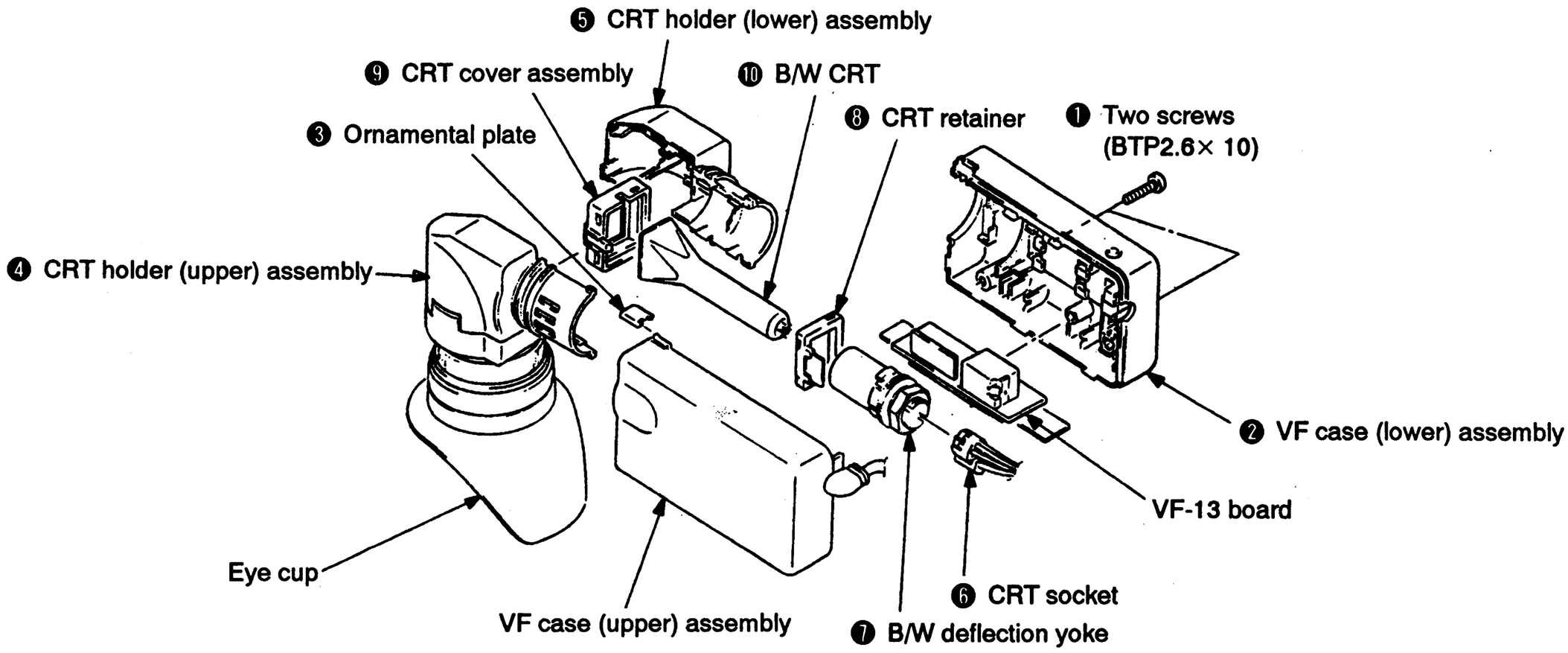

2-19. INTERNAL VIEW

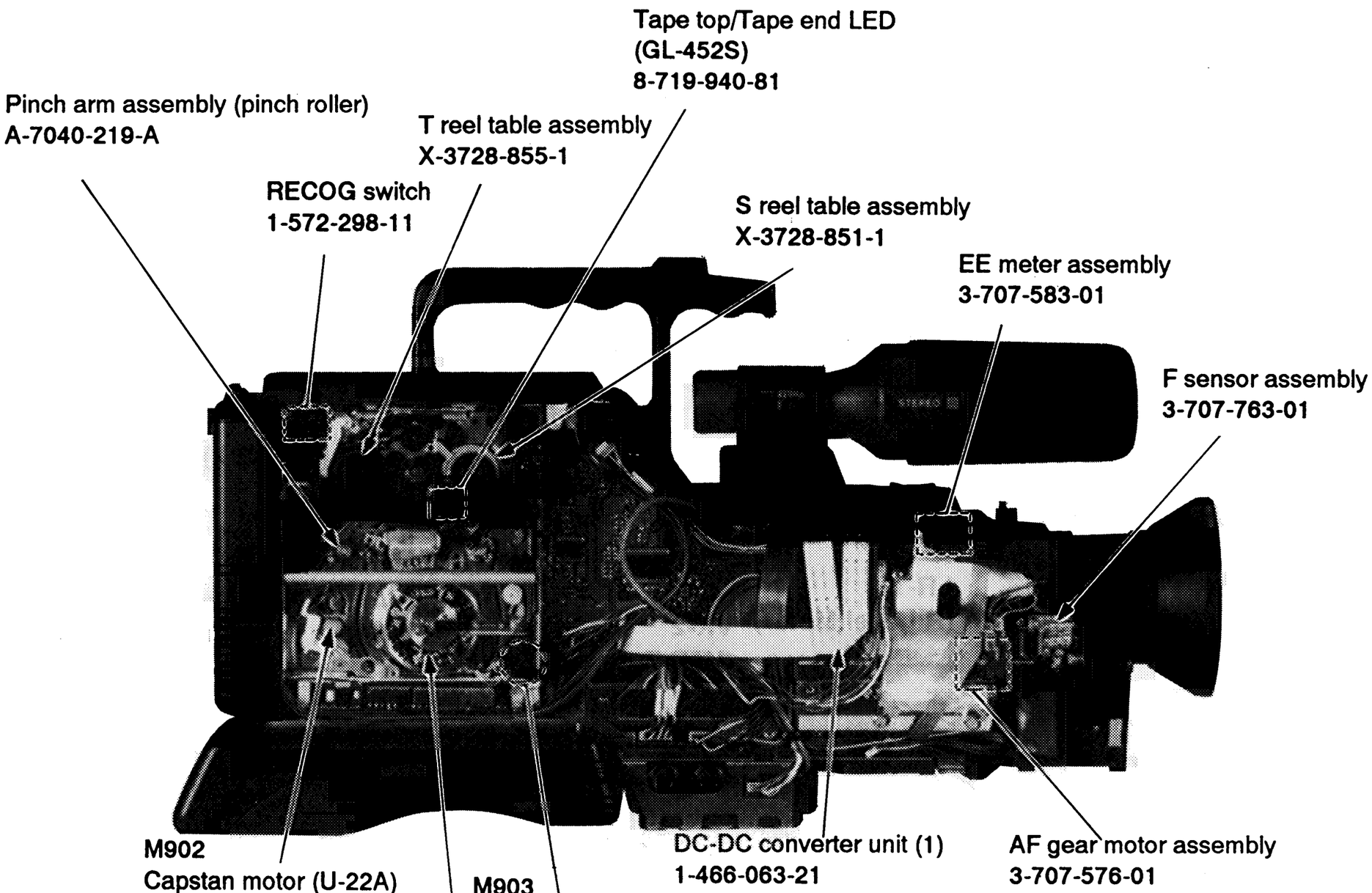

Drum

Drum assembly DGU-59A-R	A-7048-335-A
Rotary upper drum assembly DGU-59-R	A-7049-285-A

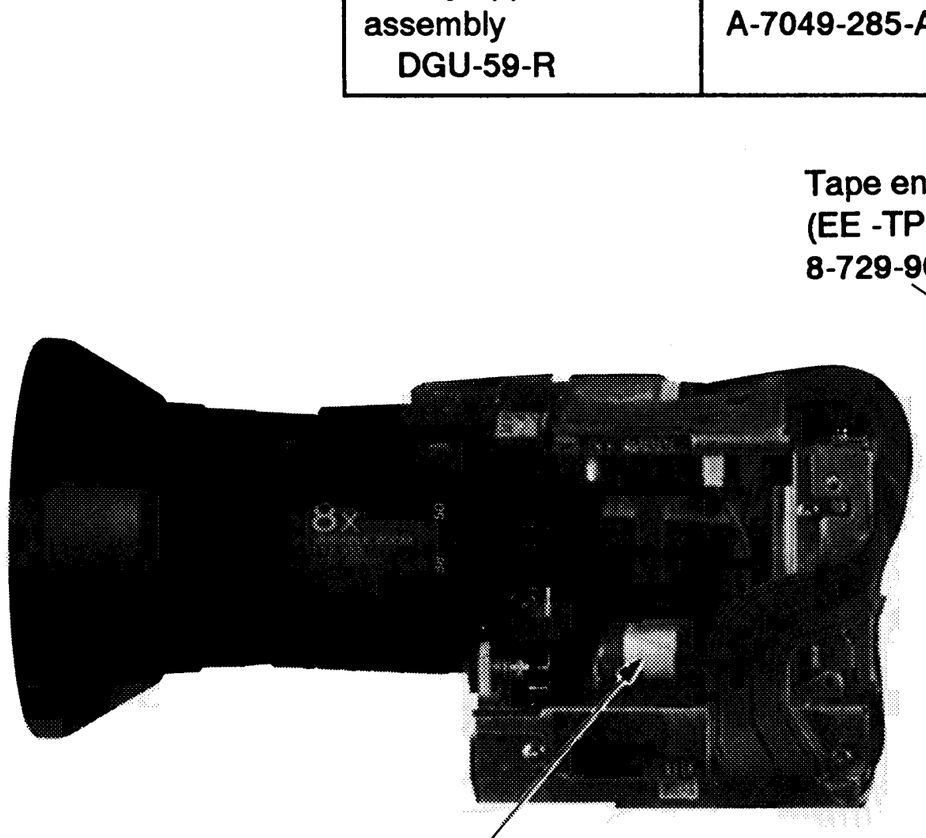

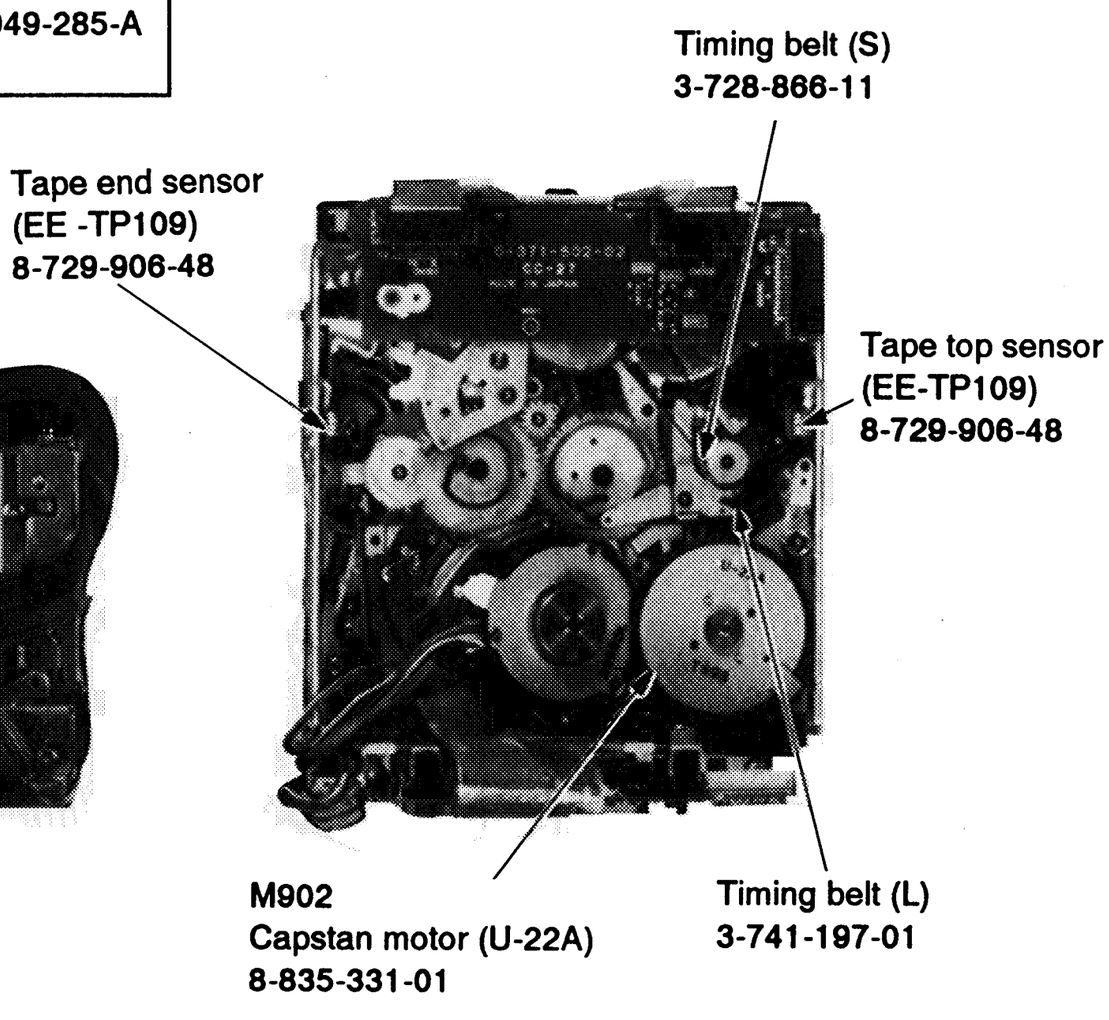

SECTION 3
DIAGRAMS

3-1. CIRCUIT BOARDS LOCATION

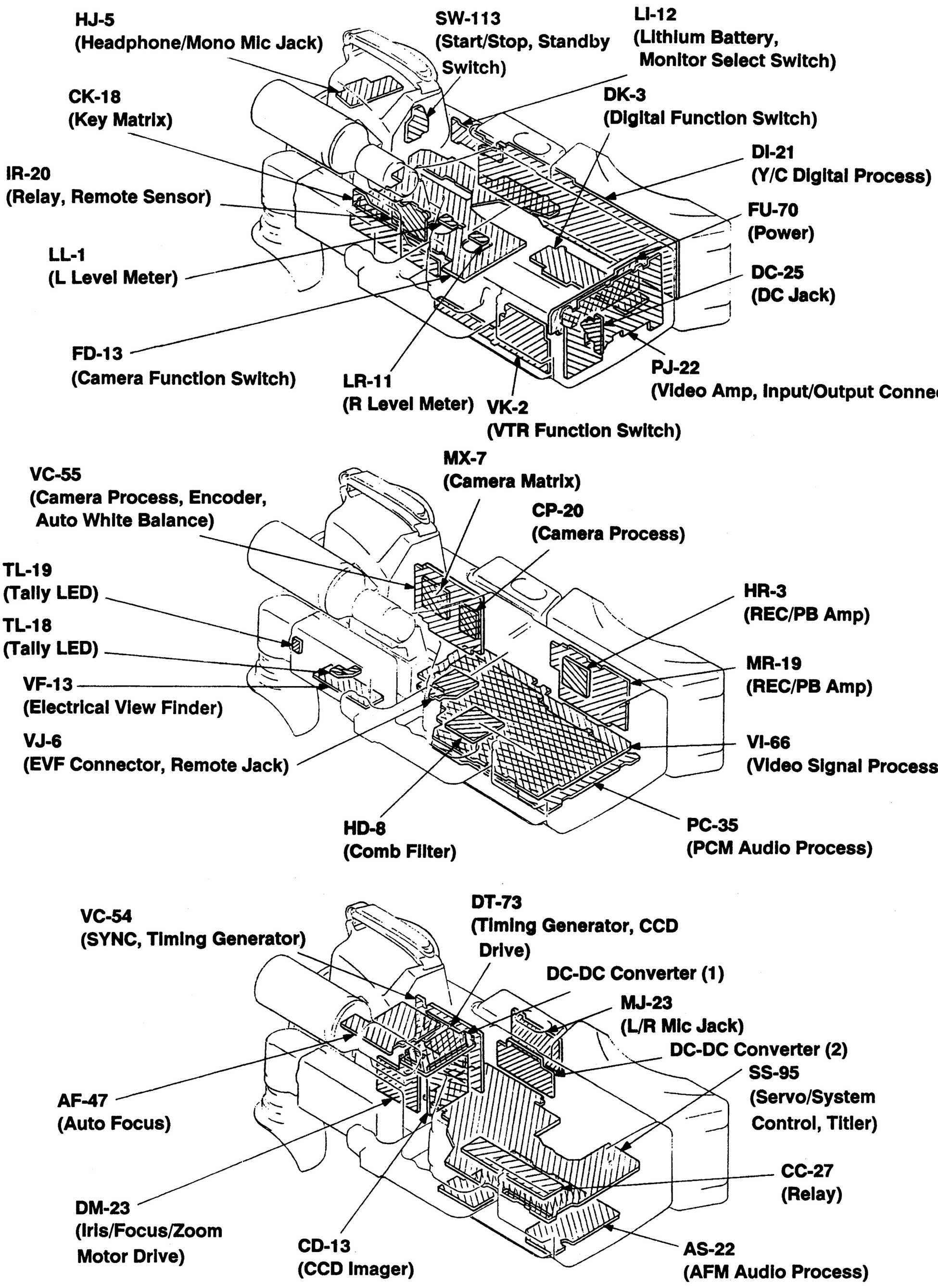

3-11. SYSTEM CONTROL INTERFACE

3-11-1. Servo/System Control IC Pin Functions

- **SS-95 board IC001 (CXP80116)**

Pin No.	Port name	I/O	Active	Function
1	SEL2	O	H	ATF control signal
2	SEL1	O	H	
3	FERA	O	H	Video mask area when dubbing (AUDIO DUB)
4	VISWP	O	H	30 Hz, duty 50% signal, when PB
5	$\overline{\text{DRUM ACCEL}}$	O	L	Drum acceleration signal when SLOW, etc.
6	DRUM BRAKE	O	H	Drum deceleration signal when SLOW, etc.
7	$\overline{\text{DMWE}}$	O	L	Permission for memory writing
8	JOG	O	H	Normal/variable speed playback selecting signal for video circuit
9	TSB	O	H	Sampling hold signal for ATF AGC
10	H CHG	O	H	Head selecting signal when SLOW/STILL
11	SYSTEM SYNC	O	H	Vd signal synchronized to Comp sync input
12	SP/$\overline{\text{LP}}$	O	H	SP: H, LP: L (mode selecting output)
13	DM ON/OFF	O	H	MEMORY/THROUGH selecting signal, H: MEMORY, L: THROUGH
14	VA PB MODE	O	H	REC/PB selecting signal for video, audio circuits
15	$\overline{\text{M IN3}}$	I	L	Mode input signal from mechanism switches
16	$\overline{\text{M IN2}}$	I	L	
17	$\overline{\text{M IN1}}$	I	L	
18	$\overline{\text{M IN0}}$	I	L	
19	———	—	—	Not used
20	LM UNLOAD	O	H	Control signal for loading motor, H: UNLOADING
21	LM LOAD	O	H	Control signal for loading motor, H: LOADING
22	———	—	—	Not used
23	———	—	—	
24	M OUT2	O	L	Mode control output signal of mechanism switches
25	$\overline{\text{M OUT1}}$	O	L	
26	$\overline{\text{M OUT0}}$	O	L	
27	TOP/END LED	O	H	LED control signal for TOP/END detection of tape
28	$\overline{\text{REEL LED}}$	O	L	LED control signal for reel rotation detection
29	PCM INHIBIT	O	L	PCM recording inhibit signal, Normal: Hi-z, Inhibit: L
30	AF REC	O	H	Hi signal output during after recording mode
31	MP	I		Fixed to "LOW"
32	$\overline{\text{RST}}$	I	L	Reset signal input pin from mode controller
33	GND			
34	XTAL			Pin to connect 16 MHz crystal oscillator
35	EXTAL	I		
36	$\overline{\text{MECHA CS}}$	I	L	Chip select signal from mode control microprocessor
37	DATA TO SLV	I	H	Data that send from mode control microprocessor to servo/system control microprocessor
38	DATA TO MST	O	H	Data that send from servo/system control microprocessor to mode control microprocessor
39	$\overline{\text{CLK}}$	I	L	Clock from mode control microprocessor
40	———			

Pin No.	Port name	I/O	Active	Function
41	E DET	I	H	Auto discrimination result for playback, H: Hi-8, L: NORMAL
42	STE/MONO	I	H	Mode discrimination result for AFM, H: STEREO, L: MONO
43	$\overline{\text{M IN4}}$	I	L	Fixed to "L", not used
44	TOP SENS	I	H	Tape top detection signal
45	END SENS	I	H	Tape end detection signal
46	T REEL FG	I	H	T reel table rotation detection signal
47	S REEL FG	I	H	S reel table rotation detection signal
48	BATT SENS	I		Battery level detection signal
49	—	—	—	Not used
50	SW POSI ADJ	I		Position adjustment for PF SWP
51	ATF ERROR	I		ATF error (ATF lock)
52	AVss			GND pin of A/D converter
53	AVref	I		Reference voltage input pin of A/D converter
54	AVDD			Positive power supply pin of A/D converter
55	DRUM PG	I	H	Drum PG input pin, 60 Hz
56	—	—	—	Not used
57	CLOG	I	H	PB RF detection result input, existence/no existence
58	COMP SYNC	I	H	Video composite sync input pin
59	PB SP/LP	I	H	SP/LP detection signal when PB
60	DRUM PG	I	H	Drum PG input pin
61	DRUM FG	I	H	Drum PG input pin, 600 Hz, duty 50%
62	CAP FG	I	H	Capstan FG input
63	CLOG CONT	O	H	
64	$\overline{\text{DRUM ON}}$	O	L	Drum motor ON/OFF signal
65	CAP D/A	O	H	Capstan servo control signal
66	DRUM D/A	O	H	Drum servo control signal
67	CAP PWM	O	H	PWM output pin for CAP error output (Servo exclusive output pin)
68	DRUM RVS	O	H	Drum motor forward/reverse rotation control signal
69	CAP FG	I	H	Capstan FG input, SP: 1325 Hz, duty 50%
70	—	—	—	Not used
71	NMI		L	Normally "H"
72	VDD			Positive power supply pin
73	GND			GND pin
74	—	—	—	Not used
75	CAP ON	O	H	Capstan motor ON/OFF signal
76	CAP FWD	O	H	Capstan motor forward/reverse rotation control signal
77	$\overline{\text{RP PB MODE}}$	O	L	REC/PB selecting signal for REC/PB amplifier
78	FE ON(FERS)	O	H	Flying erase oscillation ON, OFF signal
79	JOG VD	O	H	Pseudo VD signal when variable speed mode
80	RF SWP	O	H	RF switching pulse output pin (30Hz when PB, duty 50%)

* Active indicates positive logic of signal. In case it is edge, it functions as "H".

3-11-2. Mode Control IC Pin Function

- **SS-95 board IC101 (μPD75316)**

Pin No.	Port name	I/O	Active	Function
1	S12	O	*	LCD segment drive signal
2	S13	O	*	
3	S14	O	*	
4	S15	O	*	
5	S16	O	*	
6	S17	O	*	
7	S18	O	*	
8	S19	O	*	
9	S20	O	*	
10	S21	O	*	
11	-	O	*	-
12	-	O	*	-
13	EVR CS	O	L	Chip select signal to EVR microprocessor (IC301 on VC-55 board)
14	MECHA CS	O	L	Chip select signal to mechanism control microprocessor (IC101 on SS-95 board)
15	TITLE CS	O	H	Chip select signal to titler microprocessor (IC161 on SS-95 board)
16	SRAM CS	O	H	Chip select signal to SRAM1 (IC162 on SS-95 board)/titler free-run
17	CG STB	O	H	Strobe signal for character generator
18	VA SP STB	O	H	Strobe signal for video serial/parallel
19	PCM SP STB	O	H	Strobe signal for PCM serial/parallel
20	PCM RAM CS	O	L	RAM chip select signal for PCM
21	COM 0	O	*	LCD drive signal
22	COM 1	O	*	
23	COM 2	O	*	
24	COM 3	O	*	
25	BIAS	O		Fixed to "L"
26	Vcc 0	I		Power supply pin for LCD drive
27	Vcc 1	I		
28	Vcc 2	I		
29	CAM POWER	O	L	Power supply ON/OFF signal for camera
30	VTR POWER	O	L	Power supply ON/OFF signal for VTR
31	DM POWER	O	L	Power supply ON/OFF signal for digital memory
32	DM CS	O	L	Chip select signal for digital memory
33	GND	-	-	-
34	K OUT 1	O	L	Key matrix output 0
35	K OUT 2	O	L	Key matrix output 1
36	K OUT 3	O	L	Key matrix output 2
37	K OUT 4	O	L	Key matrix output 3
38	BATT IN	I	L	Detection of battery pack presence
39	CLK	I/O	L	O: clock from mode controller, I: clock from camera microprocessor
40	DATA TO SLV	O	H	Data that send from mode controller to servo/system controller

Pin No.	Port name	I/O	Active	Function
41	DATA TO MST	I	H	Data that send from other microprocessors to mode controller
42	REF VD	I	L	System sync
43	$\overline{\text{DEW}}$	I	L	Dew detection signal
44	$\overline{\text{LINCS PWR}}$	I	L	Power OFF to ON input signal from remote commander
45	$\overline{\text{LI PRE END}}$	I	L	Lithium battery PRE END input
46	$\overline{\text{K OUT 5}}$	O	L	Key matrix output 5
47	$\overline{\text{K OUT 6}}$	O	L	Key matrix output 6
48	$\overline{\text{K OUT 7}}$	O	L	Key matrix output 7
49	$\overline{\text{K OUT 8}}$	O	L	Key matrix output 8
50	FADER PWM	O	H	PWM signal output pin for camera fader
51	$\overline{\text{MAKER CS}}$	O	L	Chip select signal for video marker
52	$\overline{\text{K OUT 9}}$	O	L	Key matrix output 9
53	$\overline{\text{SYSTEM RST}}$	O	L	AF/servo system controller reset signal output pin when power supply ON
54	VDD	—	—	Positive power supply input pin
55	XT1	I		Pin to connect clock oscillator for clock
56	XT2	I		
57	—	—	—	Not used
58	X1	I		Pin to connect main clock oscillator
59	X2	I		
60	K IN 1	I	L	Key matrix input 1
61	K IN 2	I	L	Key matrix input 2
62	K IN 3	I	L	Key matrix input 3
63	K IN 4	I	L	Key matrix input 4
64	K IN 5	I	L	Key matrix input 5
65	K IN 6	I	L	Key matrix input 6
66	K IN 7	I	L	Key matrix input 7
67	K IN 8	I	L	Key matrix input 8
68	$\overline{\text{RESET}}$	I	L	Reset signal input pin
69	—	O	*	Not used
70	—	O	*	
71		O	*	LCD segment drive signal
72		O	*	
73		O	*	
74		O	*	
75		O	*	
76		O	*	
77		O	*	
78		O	*	
79		O	*	
80		O	*	

* Active indicates positive logic of signal. In case it is edge, it functions as "H". LCD is 1/4 duty.

SECTION 5
EXPLODED VIEWS

NOTE:

- -XX, -X mean standardized parts, so they may have some differences from the original one.
- The construction parts of an assembled part are indicated with a collation number in the remark column.
- Items marked "*" are not stocked since they are seldom required for routine service. Some delay should be anticipated when ordering these items.
- The mechanical parts with no reference number in the exploded views are not supplied.

The components identified by mark ⚠ or dotted line with mark ⚠ are critical for safety.
Replace only with part number specified.

5-1. CABINET (LEFT) ASSEMBLY

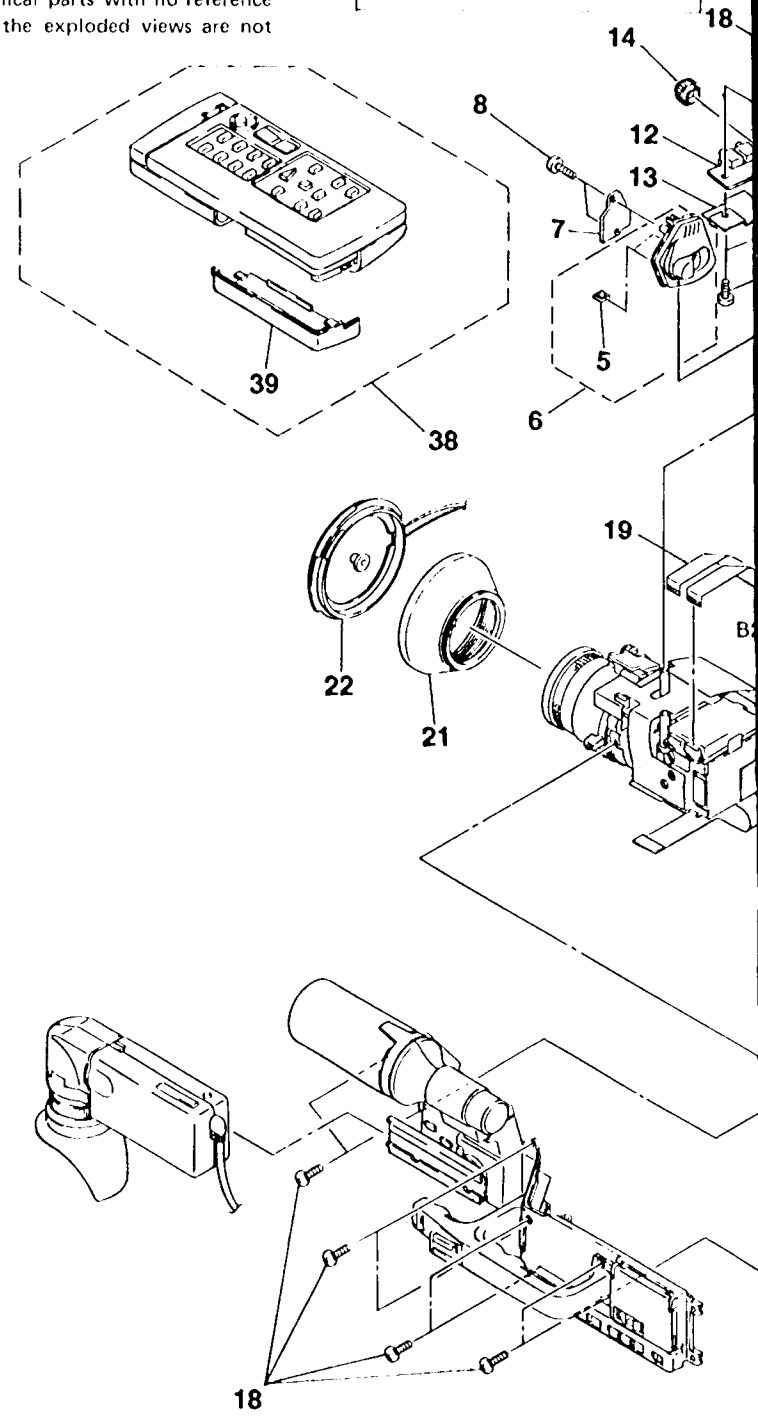

No.	Part No.	Description	Remark
1	X-3742-720-1	CABINET (L) SUB ASSY	2-5
2	3-742-825-01	BELT, GRIP	
3	3-742-851-01	PAD, GRIP	
4	3-669-480-21	+ PTPWH 2	
5	3-718-233-01	NUT, PLATE	
6	X-3742-717-1	BASE SUB ASSY, SP	5
7	*1-633-599-11	SW-113 BOARD	
8	4-356-741-31	SCREW, TAPPING (BIND 2X8)	
9	1-571-373-11	SWITCH, PUSH (ZOOM T/W) (S901)	
10	3-742-802-01	HOLDER, ZM	
11	*1-633-598-11	VJ-6 BOARD	
12	*1-633-594-11	HJ-5 BOARD	
13	3-742-870-01	PLATE, BLIND, HJ	
14	3-742-800-01	KNOB, HV	
15	X-3742-708-1	LID ASSY, CASSETTE	
16	3-733-912-11	SCREW (M2X4.5), SPECIAL HEAD	
17	3-742-869-01	COVER, MIC JACK	
18	3-742-886-11	SCREW (M2X6), +B	
19	1-575-447-11	WIRE, FLAT TYPE 7P	
20	1-575-448-11	WIRE, FLAT TYPE 8P	
21	3-742-798-01	HOOD	

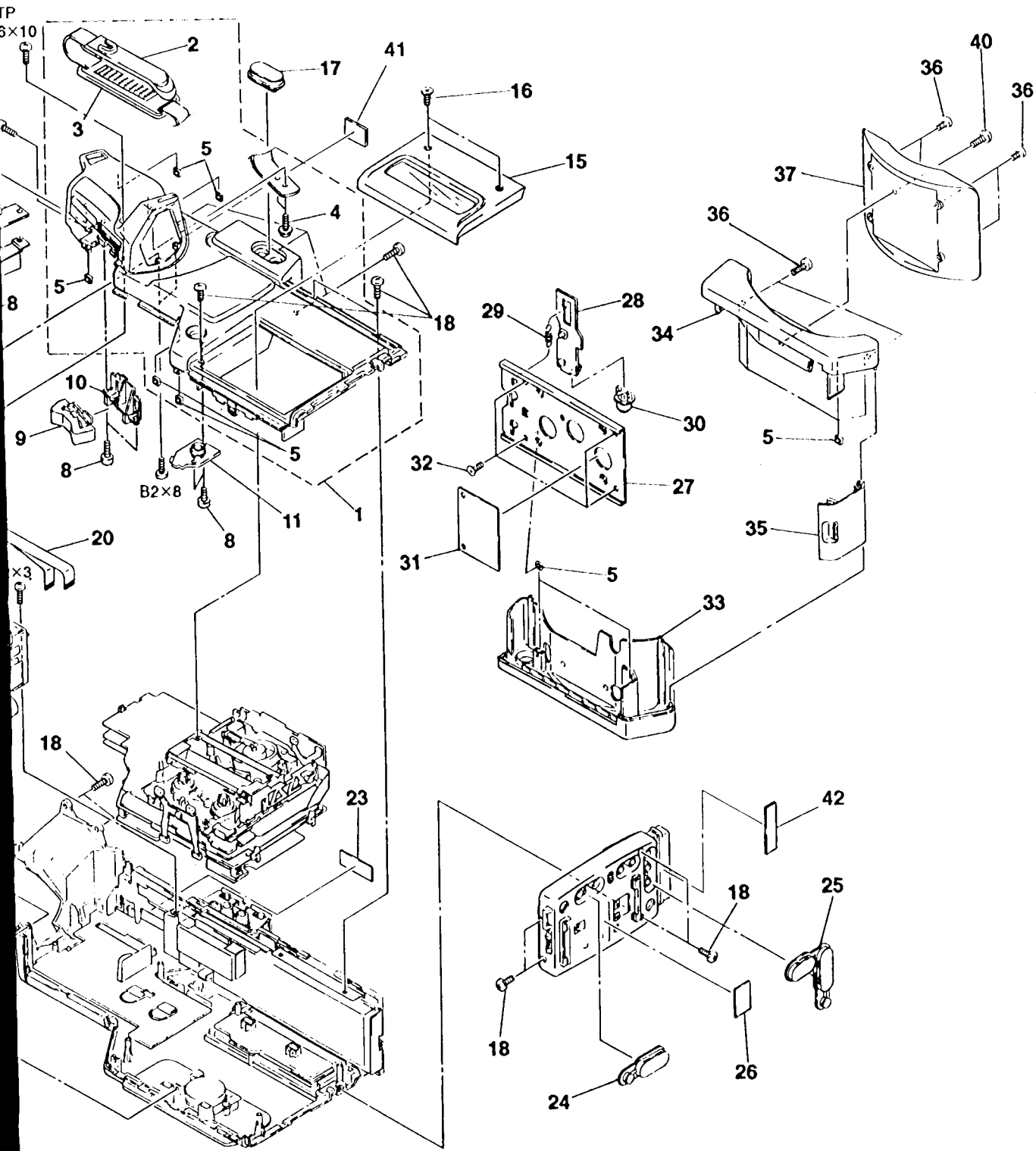

No.	Part No.	Description	Remark
22	X-3742-727-1	CAP ASSY, HOOD	
23	*3-742-884-01	LABEL, MODEL NUMBER (U/C)	
24	3-742-852-01	COVER (A), JACK	
25	3-742-853-01	COVER (B), JACK	
26	*3-719-683-01	LABEL, BATTERY FITTING	
27	3-742-789-01	PLATE, SLIDE	
28	X-3742-706-1	LEVER ASSY, LOCK	
29	3-307-373-00	SPRING, TENSION	
30	3-742-721-01	KNOB, LOCK	
31	3-742-717-01	PLATE, BLIND	
32	3-719-831-21	SCREW (M2X4)	
33	3-742-843-01	CABINET (R), LOWER	
34	3-742-842-01	CABINET (L), LOWER	
35	3-742-833-01	CABINET (DOOR), LOWER	
36	3-742-886-01	SCREW (M2X4), +B	
37	3-742-881-01	PAT, SHOULDER	
38	1-465-395-11	COMMANDER, REMOTE (RMT-500)	39
39	3-742-854-01	COVER, BATTERY	
40	3-742-900-01	SCREW, STOPPER	
41	*3-704-256-01	LABEL, CAUTION (US MODEL)	
42	*3-725-142-01	LABEL, FUSE (US/Canadian MODEL)	

SECTION 6
ELECTRICAL PARTS LIST

SS-95

NOTE:

The components identified by mark ⚠ or dotted line with mark ⚠ are critical for safety.
Replace only with part number specified.

Les composants identifiés par une marque ⚠ sont critiques pour la sécurité.
Ne les remplacer que par une pièce portant le numéro spécifé.

- Due to standardization, replacements in the parts list may be different from the parts specified in the diagrams or the components used on the set.
- Items marked "*" are not stocked since they are seldom required for routine service. Some delay should be anticipated when ordering these items.
- RESISTORS
  All resistors are in ohms
  METAL : Metal-film resistor
  METAL OXIDE : Metal Oxide-film resistor
  F : nonflammable
- -XX, -X mean standardized parts, so they may have some difference from the original one.
- SEMICONDUCTORS
  In each case, U : μ, for example:
  UA...: μA..., UPA...: μPA..., UPB...: μPB..., UPC...: μPC..., UPD...: μPD...
- CAPACITORS
  MF : μF, PF : μμF
- COILS
  MMH : mH, UH : μH

When indicating parts by reference number, please include the board name.

Ref.No	Part No.	Description		Remark
	*A-7061-977-A	SS-95 BOARD, COMPLETE (Ref.No 5000 Series) **********		
	1-562-880-11	CONNECTOR, CARD EDGE 15P		
		CAPACITOR		
C001	1-135-157-21	TANTAL. CHIP 10MF	20%	6.3V
C002	1-135-157-21	TANTAL. CHIP 10MF	20%	6.3V
C003	1-164-232-11	CERAMIC CHIP 0.01MF		50V
C004	1-135-155-21	TANTAL. CHIP 4.7MF	20%	16V
C005	1-163-035-00	CERAMIC CHIP 0.047MF		50V
C006	1-164-232-11	CERAMIC CHIP 0.01MF		50V
C007	1-163-095-00	CERAMIC CHIP 12PF	5%	50V
C008	1-163-095-00	CERAMIC CHIP 12PF	5%	50V
C009	1-163-038-00	CERAMIC CHIP 0.1MF		25V
C010	1-135-162-21	TANTAL. CHIP 33MF	20%	6.3V
C011	1-135-155-21	TANTAL. CHIP 4.7MF	20%	16V
C012	1-163-105-00	CERAMIC CHIP 33PF	5%	50V
C013	1-163-035-00	CERAMIC CHIP 0.047MF		50V
C014	1-164-232-11	CERAMIC CHIP 0.01MF		50V
C015	1-164-232-11	CERAMIC CHIP 0.01MF		50V
C016	1-164-232-11	CERAMIC CHIP 0.01MF		50V
C017	1-163-038-00	CERAMIC CHIP 0.1MF		25V
C018	1-135-072-21	TANTAL. CHIP 0.22MF	20%	35V
C019	1-163-009-11	CERAMIC CHIP 0.001MF		50V
C070	1-163-205-00	CERAMIC CHIP 0.001MF	5%	50V
C072	1-164-004-11	CERAMIC CHIP 0.1MF	10%	25V
C073	1-163-038-00	CERAMIC CHIP 0.1MF		25V
C075	1-164-232-11	CERAMIC CHIP 0.01MF		50V
C076	1-164-232-11	CERAMIC CHIP 0.01MF		50V
C077	1-163-059-00	CERAMIC CHIP 0.01MF	10%	50V
C101	1-163-037-11	CERAMIC CHIP 0.022MF	10%	25V
C102	1-124-257-00	ELECT 2.2MF	20%	35V
C103	1-163-038-00	CERAMIC CHIP 0.1MF		25V
C104	1-124-257-00	ELECT 2.2MF	20%	35V
C105	1-126-157-11	ELECT 10MF	20%	16V
C106	1-163-038-00	CERAMIC CHIP 0.1MF		25V
C107	1-163-038-00	CERAMIC CHIP 0.1MF		25V
C108	1-126-157-11	ELECT 10MF	20%	16V
C109	1-163-038-00	CERAMIC CHIP 0.1MF		25V
C110	1-124-257-00	ELECT 2.2MF	20%	35V
C111	1-163-038-00	CERAMIC CHIP 0.1MF		25V
C112	1-163-141-00	CERAMIC CHIP 0.001MF	5%	50V
C113	1-163-097-00	CERAMIC CHIP 15PF	5%	50V
C114	1-163-038-00	CERAMIC CHIP 0.1MF		25V
C115	1-126-151-11	ELECT 4.7MF	20%	16V
C116	1-124-257-00	ELECT 2.2MF	20%	35V
C117	1-163-133-00	CERAMIC CHIP 470PF	5%	50V
C118	1-163-129-00	CERAMIC CHIP 330PF	5%	50V
C119	1-163-038-00	CERAMIC CHIP 0.1MF		25V
C161	1-164-232-11	CERAMIC CHIP 0.01MF	10%	50V
C162	1-164-232-11	CERAMIC CHIP 0.01MF	10%	50V
C163	1-163-141-00	CERAMIC CHIP 0.001MF	5%	50V
C164	1-164-232-11	CERAMIC CHIP 0.01MF	10%	50V
C166	1-163-091-00	CERAMIC CHIP 8PF	0.25PF	50V
C167	1-164-232-11	CERAMIC CHIP 0.01MF	10%	50V
C168	1-163-038-00	CERAMIC CHIP 0.1MF		25V
C169	1-126-157-11	ELECT 10MF	20%	16V
C170	1-124-465-00	ELECT 0.47MF	20%	50V
C171	1-163-038-00	CERAMIC CHIP 0.1MF		25V
C172	1-126-157-11	ELECT 10MF	20%	16V
C173	1-124-465-00	ELECT 0.47MF	20%	50V
C200	1-135-157-21	TANTAL. CHIP 10MF	20%	6.3V
C202	1-135-149-21	TANTAL. CHIP 2.2MF	20%	10V
C203	1-135-157-21	TANTAL. CHIP 10MF	20%	6.3V
C204	1-124-779-00	ELECT CHIP 10MF	20%	16V
C205	1-124-779-00	ELECT CHIP 10MF	20%	16V
C206	1-135-177-21	TANTAL. CHIP 1MF	20%	20V
C207	1-135-177-21	TANTAL. CHIP 1MF	20%	20V
C208	1-124-779-00	ELECT CHIP 10MF	20%	16V
C209	1-135-159-21	TANTAL. CHIP 10MF	20%	16V
C211	1-127-539-11	ELECT(SOLID) 1MF	20%	25V
C212	1-135-177-21	TANTAL. CHIP 1MF	20%	20V
C213	1-135-154-21	TANTAL. CHIP 3.3MF	20%	20V
C214	1-162-638-11	CERAMIC CHIP 1MF		16V
C215	1-124-779-00	ELECT CHIP 10MF	20%	16V
C216	1-163-035-00	CERAMIC CHIP 0.047MF		50V
C217	1-163-038-00	CERAMIC CHIP 0.1MF		25V
C218	1-163-038-00	CERAMIC CHIP 0.1MF		25V
C219	1-163-038-00	CERAMIC CHIP 0.1MF		25V
C220	1-163-035-00	CERAMIC CHIP 0.047MF		50V
C221	1-163-019-00	CERAMIC CHIP 0.0068MF	10%	50V
C222	1-164-004-11	CERAMIC CHIP 0.1MF	10%	25V
C223	1-136-718-11	FILM CHIP 0.1MF	5%	25V
C224	1-124-589-11	ELECT 47MF	20%	16V
C225	1-127-558-11	ELECT(SOLID) 10MF	20%	10V
C226	1-163-023-00	CERAMIC CHIP 0.015MF		50V
C227	1-135-070-00	TANTAL. CHIP 0.1MF	20%	35V
C228	1-163-035-00	CERAMIC CHIP 0.047MF		50V
C229	1-163-123-00	CERAMIC CHIP 180PF	5%	50V
C230	1-135-070-00	TANTAL. CHIP 0.1MF	20%	35V
C231	1-163-095-00	CERAMIC CHIP 12PF	5%	50V
C232	1-163-101-00	CERAMIC CHIP 22PF	5%	50V
C233	1-127-558-11	ELECT(SOLID) 10MF	20%	10V
C234	1-163-097-00	CERAMIC CHIP 15PF	5%	50V
C235	1-163-101-00	CERAMIC CHIP 22PF	5%	50V
C236	1-127-558-11	ELECT(SOLID) 10MF	20%	10V
C237	1-163-009-11	CERAMIC CHIP 0.001MF	10%	50V
C238	1-163-035-00	CERAMIC CHIP 0.047MF		50V
C239	1-163-809-11	CERAMIC CHIP 0.047MF	10%	25V
C240	1-163-035-00	CERAMIC CHIP 0.047MF		50V
C241	1-163-035-00	CERAMIC CHIP 0.047MF		50V
C242	1-163-038-00	CERAMIC CHIP 0.1MF		25V
C244	1-135-154-21	TANTAL. CHIP 3.3MF	20%	20V
C245	1-164-004-11	CERAMIC CHIP 0.1MF	10%	25V
C246	1-163-038-00	CERAMIC CHIP 0.1MF		25V

5-2. CABINET (RIGHT) AND CABINET FRAME ASSEMBLIES

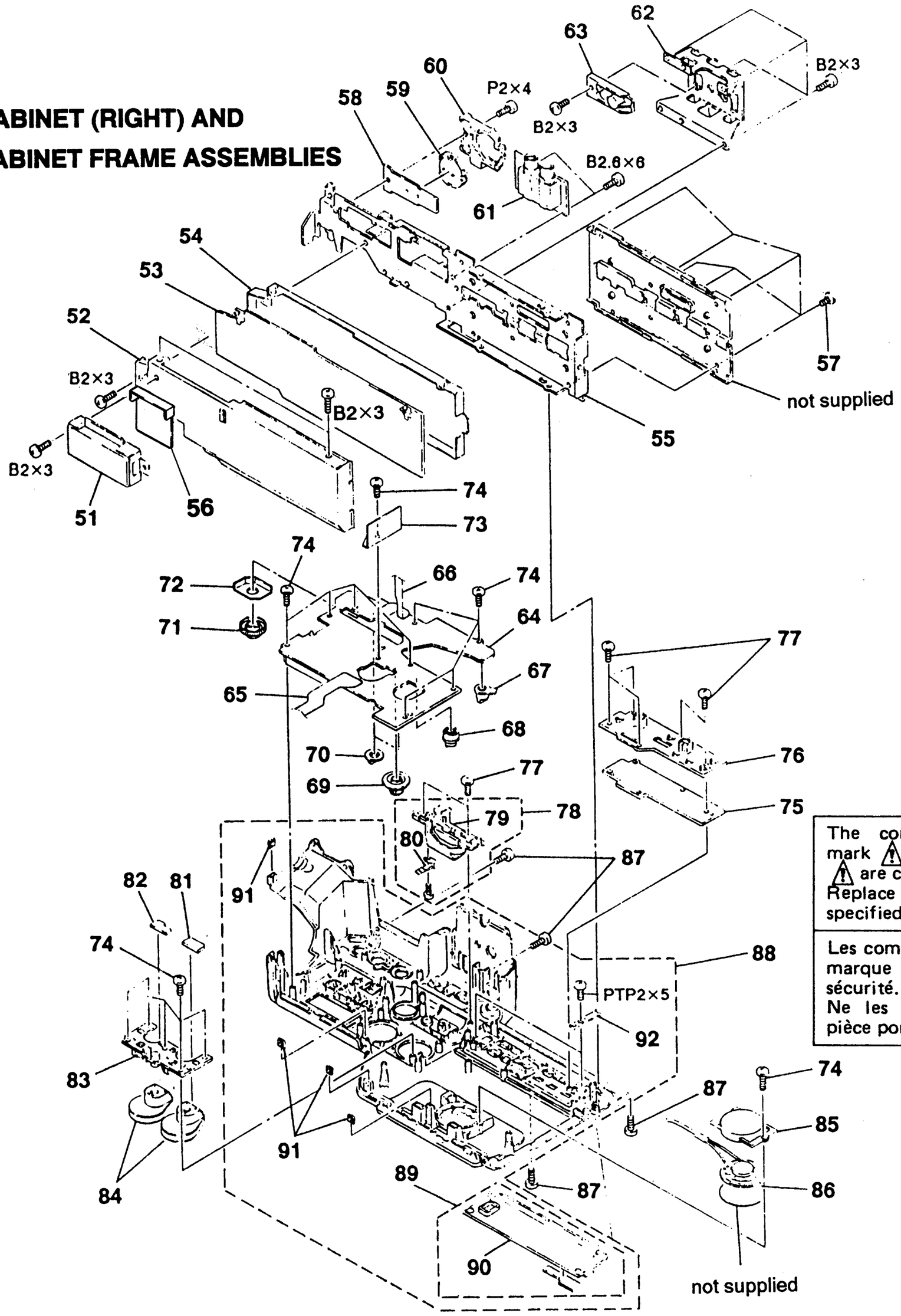

The components identified by mark ⚠ or dotted line with mark ⚠ are critical for safety.
Replace only with part number specified.

Les composants identifiés par une marque ⚠ sont critiques pour la sécurité.
Ne les remplacer que par une pièce portant le numéro spécifé.

No.	Part No.	Description	Remark
51	⚠1-466-291-11	CONVERTER UNIT, DC-DC 2	
52	*X-3742-733-1	CASE (UPPER) ASSY, DI SHIELD	
53	*A-7062-172-A	DI-21 BOARD, COMPLETE	
54	*3-742-821-01	CASE (LOWER), SHIELD, DI	
55	*3-742-828-01	FRAME, CABINET	
56	*X-3742-730-1	PLATE ASSY, SHIELD, DD	
57	3-733-912-01	SCREW (M2X2.5), SPECIAL HEAD	
58	*1-633-600-11	LI-12 BOARD	
59	1-550-104-32	HOLDER, BATTERY	
60	3-742-835-11	COVER	
61	*1-633-593-11	MJ-23 BOARD	
62	3-742-829-01	TABLE, TRIPOD	
63	3-742-743-01	PLATE, BLIND, TRIPOD	
64	*A-7062-059-A	FD-13 BOARD, COMPLETE	
65	1-633-612-11	FP-213 FLEXIBLE BOARD	
66	1-633-613-11	FP-215 FLEXIBLE BOARD	
67	3-742-806-01	KNOB, LEVEL	
68	3-742-805-01	KNOB, BAL	
69	X-3742-709-1	KNOB ASSY, RV	
70	3-742-792-01	KNOB, SHUTTER	
71	3-742-723-01	KNOB, IRIS	

No.	Part No.	Description	Remark
72	3-742-758-01	PLATE, BLIND, IRIS	
73	*3-742-755-01	PLATE, SHIELD, VR	
74	4-356-741-11	SCREW, TAPPING (BIND 2X6)	
75	*1-633-603-11	DK-3 BOARD	
76	3-742-799-01	HOLDER (R), MD	
77	4-356-741-31	SCREW, TAPPING (BIND 2X8)	
78	1-542-138-11	MICROPHONE ASSY, NARATION	79, 80
79	1-542-139-11	CAPSULE (C-1025), MICROPHONE	
80	1-572-213-11	SWITCH, LEAF	
81	*1-633-607-11	LR-11 BOARD	
82	*1-633-606-11	LL-1 BOARD	
83	3-742-801-01	RETAINER, METER	
84	1-520-499-41	METER, LEVEL	
85	3-742-811-01	BRACKET, SP	
86	1-503-293-00	SPEAKER	
87	3-742-886-11	SCREW (M2X6), +B	
88	X-3742-719-1	CABINET (R) SUB ASSY	89-92
89	X-3742-728-1	DOOR ASSY, FUNCTION	90
90	3-742-830-01	DOOR, FUNCTION	
91	3-718-233-01	NUT, PLATE	
92	3-732-705-01	SPRING, LEAF	

5-3. CABINET (UPPER) ASSEMBLY

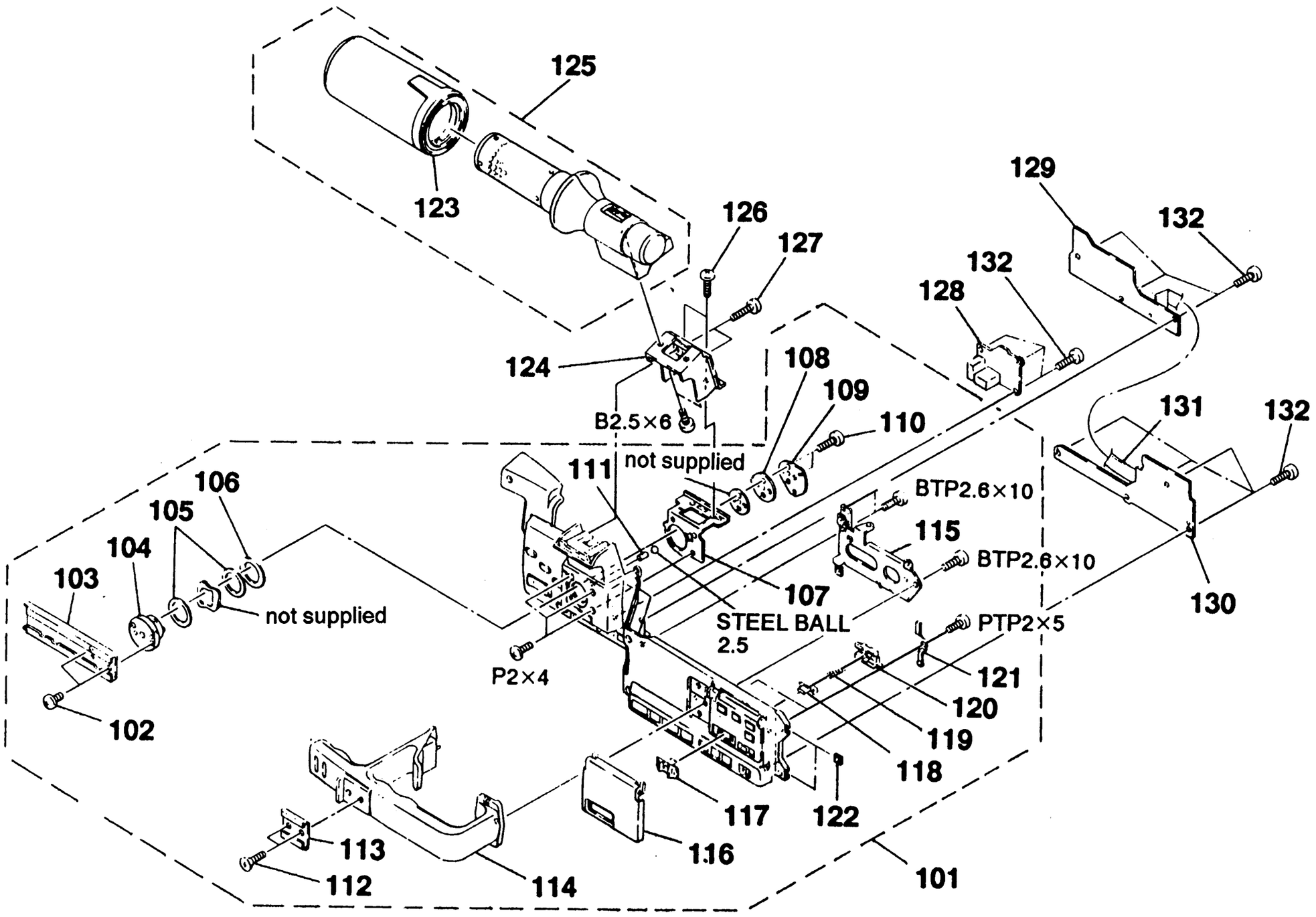

No.	Part No.	Description	Remark
101	X-3742-721-1	CABINET (UPPER) SUB ASSY	102-122
102	3-730-745-11	SCREW (2.6X4), +P	
103	3-742-707-01	SHOE, VF	
104	3-742-836-01	TABLE, ROTARY	
105	3-688-981-01	WASHER, ROTARY TABLE	
106	3-742-716-01	SPACER, DM	
107	3-742-803-01	STOPPER, ROTARY TABLE	
108	3-742-735-01	RETAINER, ROTARY TABLE	
109	3-742-736-01	SPRING	
110	3-730-745-21	SCREW (2.6X6), +P	
111	3-742-748-01	SHAFT (A)	
112	3-742-871-01	SCREW (M2X5)	
113	3-724-511-01	SHOE, ACCESSORY	
114	3-742-827-01	HANDLE	
115	3-742-787-01	BRACKET, HANDLE	
116	3-742-786-01	LID, UPPER	

No.	Part No.	Description	Remark
117	3-718-226-01	BUTTON, POWER	
118	*3-718-257-11	BUTTON, PUSH, POWER	
119	3-303-973-00	SPRING, COMPRESSION	
120	3-718-227-01	PLATE, BLIND, POWER	
121	3-742-715-01	SPRING (U), LEAF	
122	3-718-233-01	NUT, PLATE	
123	X-2536-717-1	SCREEN, WIND	
124	3-742-834-01	HOLDER, MICROPHONE	
125	1-542-137-11	MICROPHONE, STEREO (C-2028)	123
126	3-742-855-01	SCREW (M2X6) (THREE LOCK), +B	
127	4-356-741-31	SCREW, TAPPING (BIND 2X8)	
128	*1-633-605-11	IR-20 BOARD	
129	*1-633-602-11	CK-18 BOARD	
130	*1-633-604-11	VK-2 BOARD	
131	1-575-436-11	WIRE, FLAT TYPE PVC (10 CORE)	
132	4-356-741-11	SCREW, TAPPING (BIND 2X6)	

5-4. MAIN PC BOARD AND CABINET (REAR) ASSEMBLIES

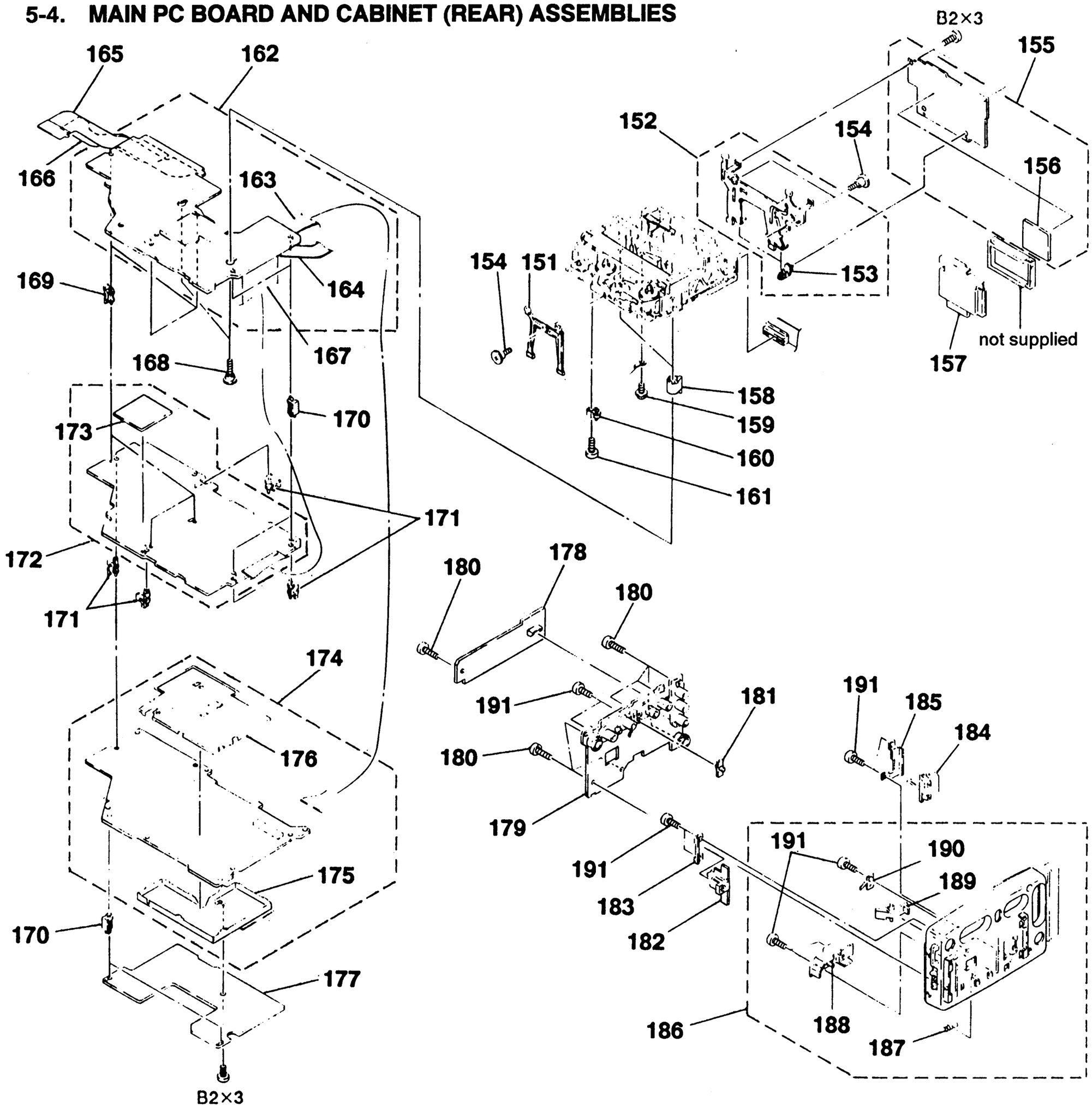

No.	Part No.	Description	Remark
151	X-3742-707-1	FRAME (UPPER) ASSY, MD	
152	X-3742-716-1	FRAME (LOWER) ASSY, MD	153
153	3-742-810-01	HINGE (D), PC BOARD	
154	3-732-791-11	SCREW (M2X3)	
155	*A-7061-981-A	MR-19 BOARD, COMPLETE	156
156	A-7068-142-A	HR-3 BOARD, COMPLETE (HIC)	
157	*3-732-793-01	LID, RP	
158	3-732-767-01	SPACER (B), PC BOARD	
159	3-703-502-01	SCREW	
160	3-732-766-01	SPACER (A), PC BOARD	
161	3-713-790-11	SCREW (M2X5), TAPPING, P3	
162	*A-7061-977-A	SS-95 BOARD, COMPLETE	163, 164
163	1-633-614-11	FP-216 FLEXIBLE BOARD (W002)	
164	1-633-616-11	FP-240 FLEXIBLE BOARD (W004)	
165	1-633-617-11	FP-241 FLEXIBLE BOARD	
166	1-633-618-11	FP-311 FLEXIBLE BOARD	
167	1-629-777-11	FP-203 FLEXIBLE BOARD	
168	3-742-713-01	SCREW (M2X8), TAPPING	
169	3-742-815-01	SUPPORT (S), PC BOARD	
170	3-742-817-01	HINGE (S), PC BOARD	
171	3-742-816-01	SUPPORT (V), PC BOARD	

No.	Part No.	Description	Remark
172	*A-7061-978-A	VI-66 BOARD, COMPLETE	173
173	A-7068-168-A	HD-8 BOARD, COMPLETE (HIC)	
174	*A-7061-979-A	PC-35 BOARD, COMPLETE	175, 176
175	*X-3742-723-1	CASE ASSY, SHIELD, PC	
176	*X-3742-724-1	LID ASSY, PC SHIELD	
177	*A-7061-980-A	AS-22 BOARD, COMPLETE	
178	*1-633-596-11	FU-70 BOARD	
179	*A-7061-982-A	PJ-22 BOARD, COMPLETE	
180	4-356-741-31	SCREW, TAPPING (BIND 2X8)	
181	3-742-714-01	KNOB, AUDIO SELECTION	
182	*1-633-597-11	DC-25 BOARD	
183	*3-742-745-01	BRACKET, DC	
184	1-537-241-61	TERMINAL BOARD (BATTERY)	
185	*3-742-711-01	PLATE, FIXED, TERMINAL	
186	X-3742-713-1	CABINET (REAR) SUB ASSY	187-191
187	4-876-347-01	SPRING, COMPRESSION	
188	3-742-772-01	COVER, BATTERY LOCK	
189	3-742-770-01	LOCK, BATTERY	
190	3-742-712-01	SPRING	
191	4-356-741-11	SCREW, TAPPING (BIND 2X6)	

5-5. MECHANISM CHASSIS ASSEMBLY (1)

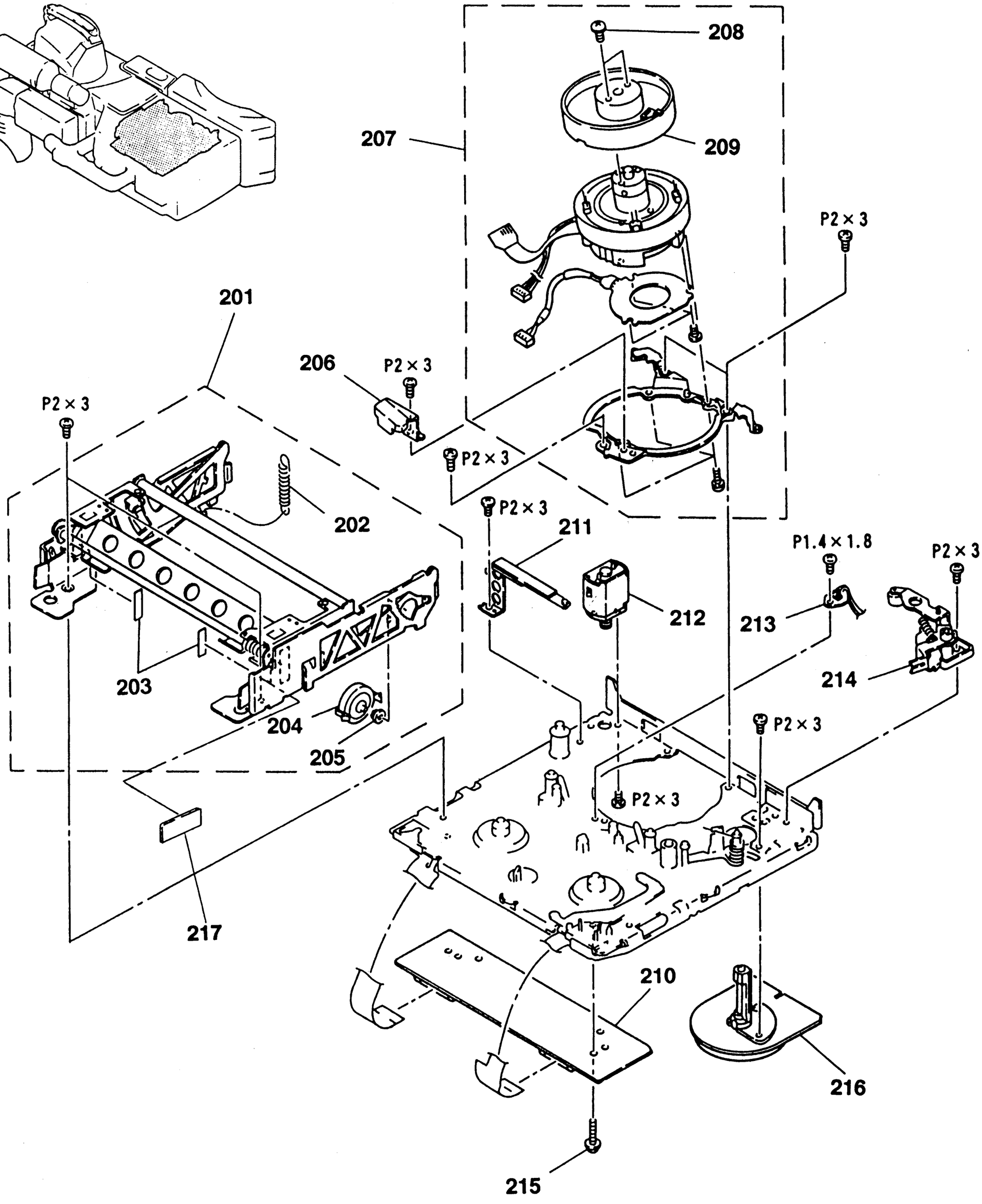

No.	Part No.	Description	Remark
201	X-3728-873-1	CASSETTE COMPARTMENT ASSY	202-205
202	3-728-825-03	SPRING, TENSION	
203	*3-728-829-01	TAPE	
204	3-728-867-02	DAMPER, OIL	
205	3-739-806-02	GEAR (2), DAMPER	
206	3-728-868-01	GUARD, GUIDE	
207	A-7048-335-A	DRUM ASSY (DGU-59A-R)	208, 209
208	3-686-493-01	SCREW (M2X5), P1	
209	A-7049-285-A	DRUM ASSY, UPPER, ROTARY (DGU-59-R)	

No.	Part No.	Description	Remark
210	*1-633-589-11	CC-27 BOARD	
211	X-3728-864-1	GROUND ASSY, SHAFT	
212	A-7040-160-A	MOTOR ASSY, THREADING (LOADING) (M903)	
213	1-808-505-12	SENSOR (DEW)	
214	A-7040-161-B	ROLLER BLOCK ASSY, HC	
215	3-713-790-11	SCREW (M2X5), TAPPING, P3	
216	8-835-331-01	MOTOR, DC U-22A (CAPSTAN) (M902)	
217	*3-730-176-01	SHEET, MD	

5-6. MECHANISM CHASSIS ASSEMBLY (2)

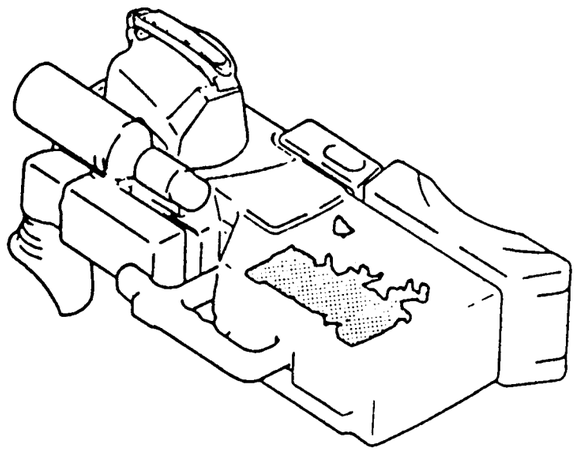

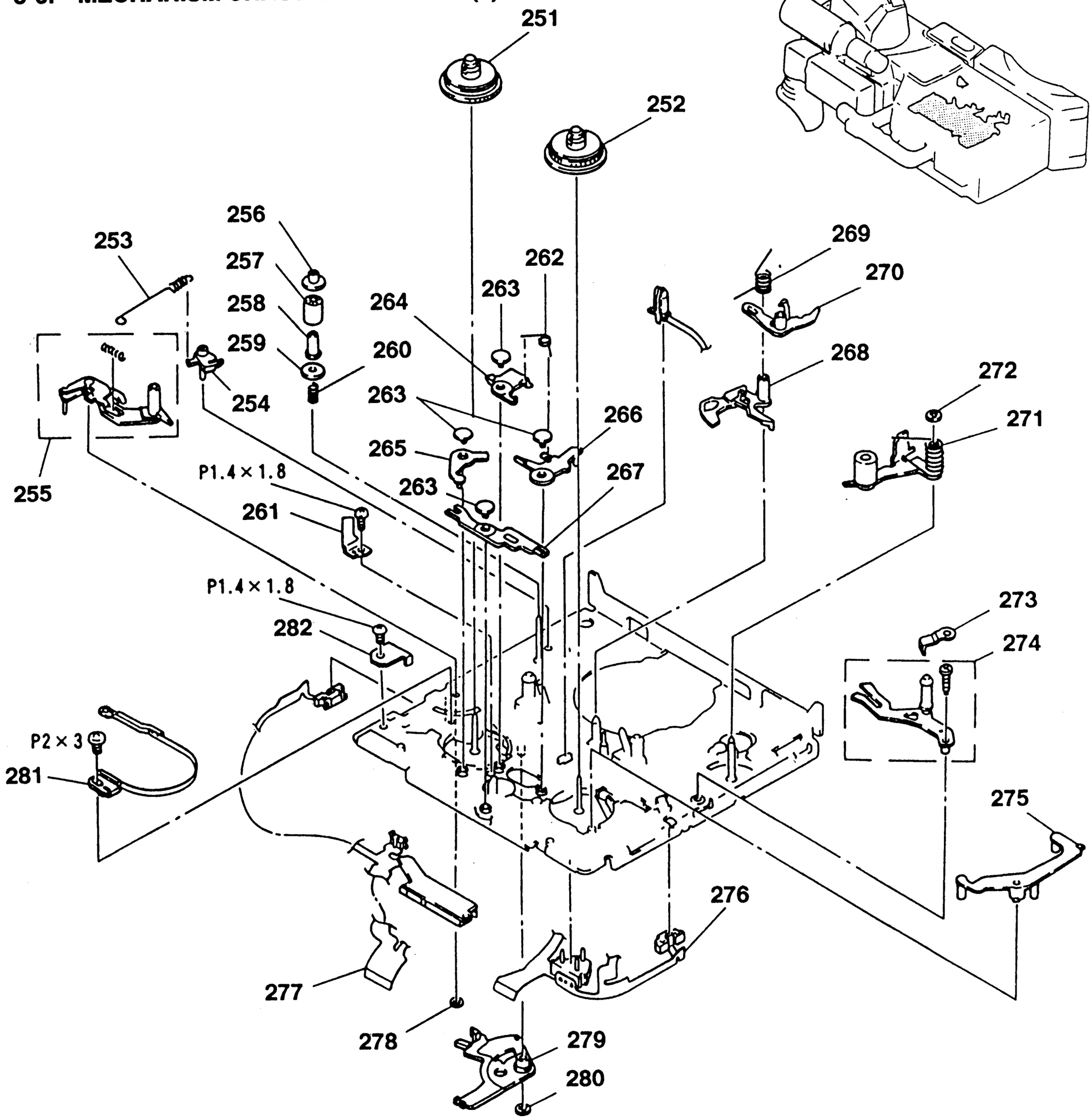

No.	Part No.	Description	Remark
251	X-3728-851-1	TABLE ASSY, REEL, S	
252	X-3728-855-1	TABLE ASSY, REEL, T	
253	3-736-414-01	SPRING, TENSION	
254	3-728-855-03	ARM, ADJUSTMENT	
255	X-3728-867-1	ARM ASSY (S), TENSION REGULATOR	
256	3-726-884-01	FLANGE, UPPER, TG2	
257	3-726-883-01	ROLLER, TG2	
258	3-726-885-01	SLEEVE, TG2	
259	3-726-882-02	FLANGE, LOWER, TG2	
260	3-726-886-01	SPRING, COMPRESSION	
261	3-726-848-01	RETAINER, TL	
262	3-726-866-01	SPRING (ST), TORSION	
263	3-726-858-01	PIN, SHAFT RETAINER	
264	3-728-849-01	BRAKE, S	
265	3-726-852-01	BRAKE, LB	
266	3-728-850-01	BRAKE, T	

No.	Part No.	Description	Remark
267	3-726-853-01	LEVER, LB	
268	3-728-875-01	STOPPER, RK	
269	3-726-864-01	SPRING (RK), TORSION	
270	3-728-852-02	ARM, RK STOPPER	
271	A-7040-219-A	ARM BLOCK ASSY, PINCH	
272	3-669-465-00	WASHER (1.5), STOPPER	
273	3-728-808-01	SPRING, LEAF	
274	X-3728-869-1	ARM ASSY, TG7	
275	3-728-848-01	ARM, LB RELEASE	
276	1-628-061-12	FP-90 FLEXIBLE BOARD	
277	1-628-060-12	FP-89 FLEXIBLE BOARD	
278	3-321-393-11	WASHER, STOPPER	
279	X-3726-806-2	LEVER ASSY, SW	
280	3-726-829-01	WASHER, STOPPER	
281	X-3726-809-2	BAND ASSY, TENSION REGULATOR	
282	3-730-125-01	RETAINER, SW	

5-7. MECHANISM CHASSIS ASSEMBLY (3)

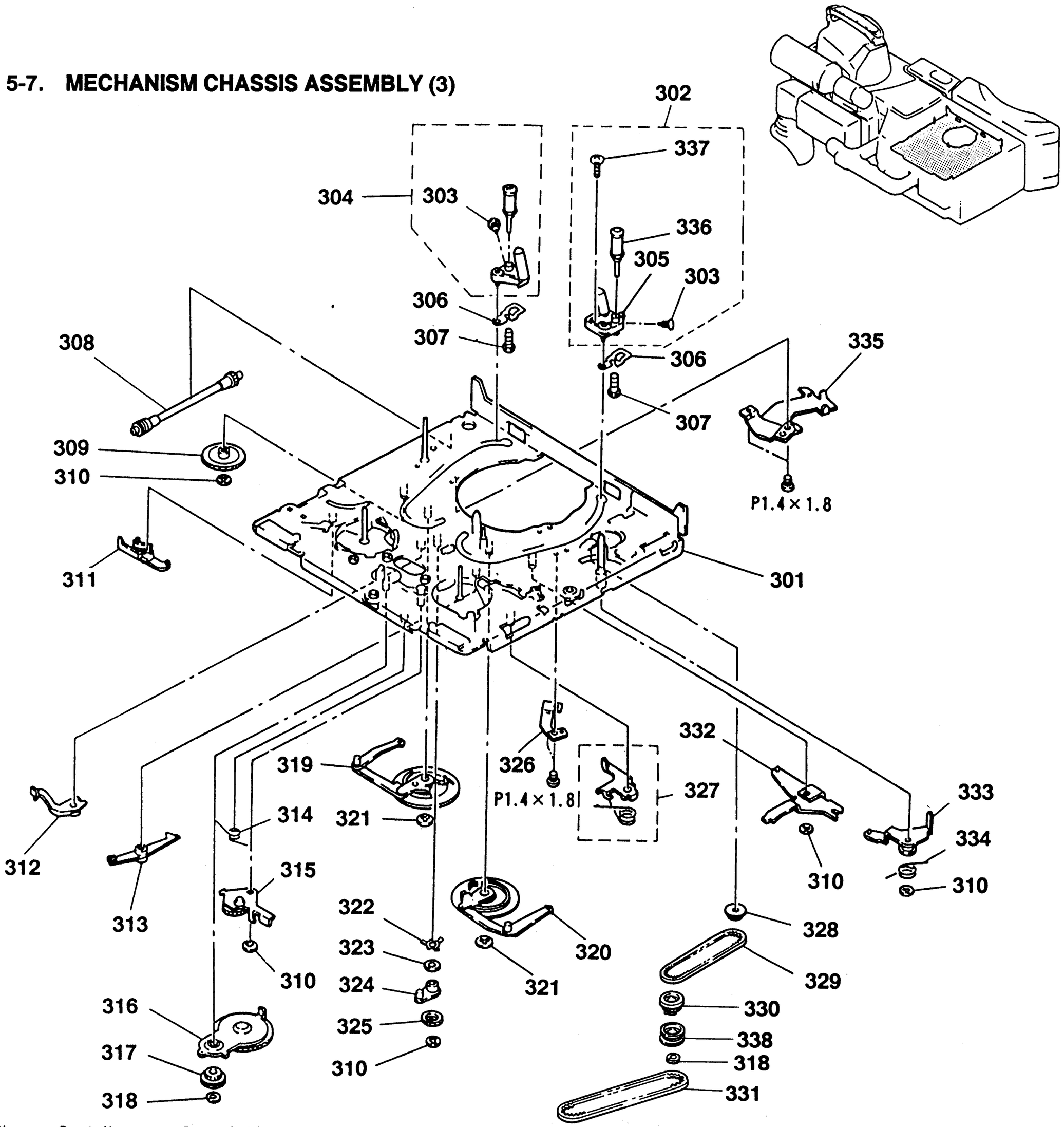

No.	Part No.	Description	Remark
301	*X-3728-801-1	CHASSIS ASSY, MECHANICAL	
302	A-7040-220-A	COASTER (RIGHT) BLOCK ASSY-N1P	303, 305 336, 337
303	3-726-822-01	SCREW (M1.4X2) (STEP), HEAD	
304	A-7040-204-A	COASTER (LEFT) BLOCK ASSY	303
305	X-3728-852-1	COASTER (RIGHT) ASSY	
306	3-736-485-01	SPRING, LEAF, COSTER	
307	3-726-830-01	SCREW (M1.4X4) (THREE LOCK)	
308	X-3728-868-1	WORM ASSY	
309	3-744-109-01	GEAR, WHEEL	
310	3-726-829-01	WASHER, STOPPER	
311	3-728-842-01	LEVER, EJECT	
312	3-728-851-01	BRAKE, UL	
313	3-726-854-01	ARM, BRAKE RELEASE	
314	3-726-865-01	SPRING (LB), TORSION	
315	A-7040-130-A	GEAR BLOCK ASSY, LB	
316	X-3728-866-1	GEAR ASSY, RK	
317	X-3728-858-1	GEAR ASSY, RC	
318	3-321-393-11	WASHER, STOPPER	
319	X-3728-842-1	GEAR (LEFT) ASSY, DRIVE	

No.	Part No.	Description	Remark
320	X-3728-843-1	GEAR (RIGHT) ASSY, DRIVE	
321	3-669-465-00	WASHER (1.5), STOPPER	
322	3-726-867-01	SPRING, LEAF	
323	3-701-436-21	WASHER, POLYEHTHYLENE	
324	3-726-857-02	ARM, UL	
325	3-726-856-02	GEAR, UL	
326	*3-726-805-01	REINFORCEMENT (TT)	
327	X-3726-808-2	BRAKE ASSY, TS	
328	X-3726-805-1	GEAR ASSY, JOINT	
329	3-728-866-11	BELT (S), TIMING	
330	X-3726-838-1	PULLEY (UPPER) ASSY, MIDWAY	
331	3-741-197-01	BELT (L), TIMING	
332	3-744-145-01	LEVER, THREADING	
333	X-3726-824-1	ARM ASSY, PINCH SUB	
334	3-726-895-01	SPRING	
335	X-3726-841-1	REINFORCEMENT (SS) ASSY	
336	X-3728-810-1	ROLLER ASSY (U)(PLATING), GUIDE	
337	3-736-473-01	SCREW (M2XO.25) (THREE LOCK)	
338	3-741-196-01	PULLEY (LOWER), BELT MIDWAY	

5-8. CAMERA ASSEMBLY

Be sure to read "Cautions for Replacement of CCD Imager" on page 100 when changing the CCD imager.

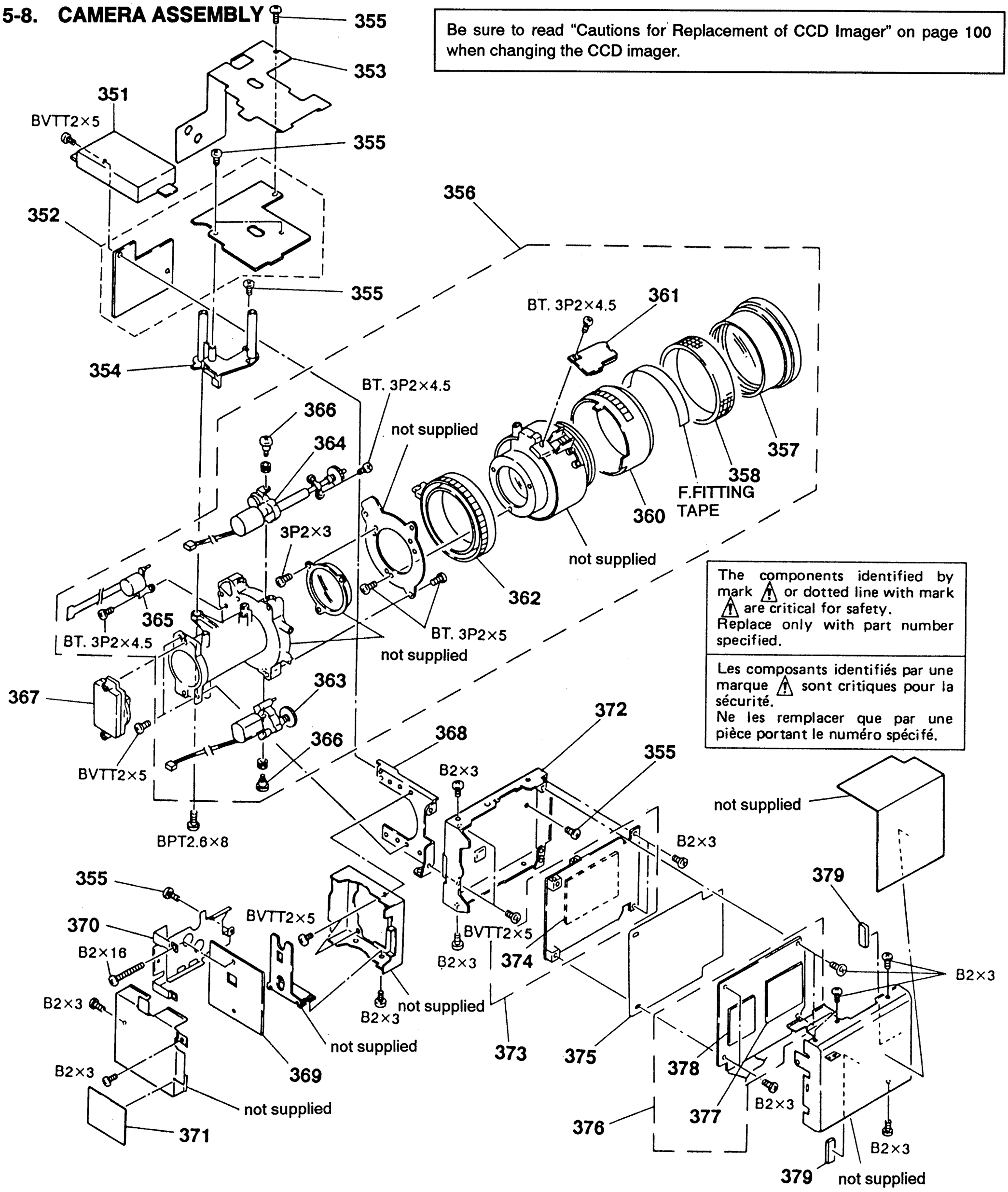

The components identified by mark ⚠ or dotted line with mark ⚠ are critical for safety.
Replace only with part number specified.

Les composants identifiés par une marque ⚠ sont critiques pour la sécurité.
Ne les remplacer que par une pièce portant le numéro spécifé.

No.	Part No.	Description	Remark
351	⚠1-466-063-21	UNIT, DC-DC CONVERTER 1	
352	*A-7030-171-A	AF-DM ASSY	
353	*3-734-482-01	PLATE, SHIELD, FC	
354	3-742-819-01	SUPPORT (S), LENS	
355	3-727-903-01	SCREW (2X5), TAPPING, + B	
356	1-547-334-13	LENS, ZOOM (VCL-1108YB)	357-366
357	3-707-577-01	RING UNIT, F	
358	3-707-575-01	RUBBER, FOCUS	
360	3-707-578-01	SCALE RING, F	
361	3-707-763-01	SENSOR ASSY, F	
362	3-707-582-01	RING ASSY, ZOOM	
363	3-707-580-01	MOTOR ASSY, PZ GEAR (ZOOM)	
364	3-707-576-01	MOTOR ASSY, AF GEAR (FOCUS)	
365	3-707-583-01	METER ASSY, EE (IRIS)	
366	3-707-501-01	SCREW (Z) MOTOR FITTING	
367	8-750-011-83	IU022BN-10C (CCD IMAGER)	
368	*3-732-773-01	BRACKET, CCD	
369	*A-7071-007-A	CD-13 BOARD, COMPLETE	
370	*3-734-421-01	HEAT SINK, CD	
371	*3-734-481-01	PLATE	
372	*X-3732-708-1	CASE ASSY, SHIELD, CAMERA	
373	*A-7062-068-A	VC-54 BOARD, COMPLETE	374
374	A-7068-143-A	DT-73B BOARD, COMPLETE (HIC)	
375	*3-734-467-01	PLATE, SHIELD, VC	
376	*A-7062-069-A	VC-55 BOARD, COMPLETE	377, 378
377	A-7068-144-A	MX-7 BOARD, COMPLETE (HIC)	
378	A-7068-145-A	CP-20 BOARD, COMPLETE (HIC)	
379	*3-734-418-01	PROTECTOR, HIC	

5-9. EVF ASSEMBLY

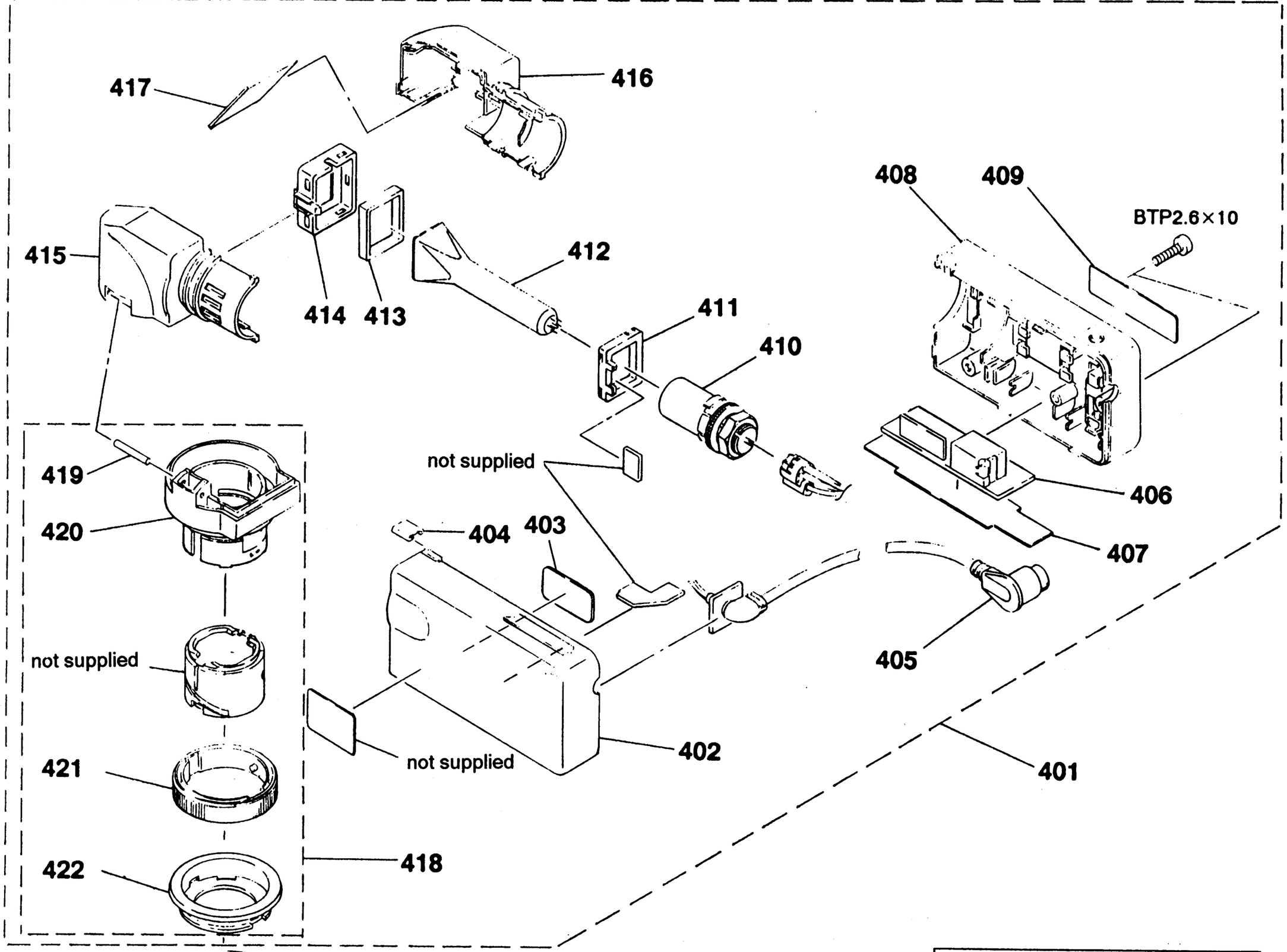

The components identified by mark ⚠ or dotted line with mark ⚠ are critical for safety.
Replace only with part number specified.

Les composants identifiés par une marque ⚠ sont critiques pour la sécurité.
Ne les remplacer que par une pièce portant le numéro spécifié.

No.	Part No.	Description	Remark
401	A-7019-204-A	VF-263 ASSY	402-422
402	X-3742-701-1	CASE (UPPER) ASSY, VF	
403	*3-704-233-01	LABEL, CAUTION, HIGH VOLTAGE (US/Canadian MODEL)	
404	3-742-709-01	PLATE, ORNAMENTAL	
405	1-575-441-11	CORD, CONNECTION (WITH 8P PLUG)	
406	*A-7062-060-A	VF-13 BOARD, COMPLETE	
407	*3-742-752-01	INSULATOR, VF	
408	X-3742-712-1	CASE (LOWER) ASSY, VF	
409	*3-742-885-01	LABEL, MODEL NUMBER, EVF (U/C)	
410	⚠1-451-357-12	DEFLECTION YOKE	
411	3-742-767-01	RETAINER, CRT	
412	⚠1-546-084-11	CATHODE-RAY TUBE, B/W (C1M50P45)	(V901)
413	3-742-705-01	BUSHING, CRT	
414	X-3742-711-1	COVER ASSY, CRT	
415	X-3742-703-1	HOLDER (UPPER) ASSY, CRT	
416	X-3742-704-1	HOLDER (LOWER) ASSY, CRT	
417	3-742-710-01	MIRROR, REFLECTION	
418	A-7091-150-A	TABLE ASSY, LENS	419-422
419	3-742-740-01	SHAFT, ROTARY	
420	3-742-822-01	TABLE, LENS	
421	3-742-766-01	RING, ADJUSTMENT	
422	3-742-769-01	HOLDER, EYE CUP	
423	3-742-804-01	EYE CUP	

SECTION 6
ELECTRICAL PARTS LIST

SS-95

NOTE:

The components identified by mark ⚠ or dotted line with mark ⚠ are critical for safety.
Replace only with part number specified.

Les composants identifiés par une marque ⚠ sont critiques pour la sécurité.
Ne les remplacer que par une pièce portant le numéro spécifé.

- Due to standardization, replacements in the parts list may be different from the parts specified in the diagrams or the components used on the set.
- Items marked "*" are not stocked since they are seldom required for routine service. Some delay should be anticipated when ordering these items.
- RESISTORS
  All resistors are in ohms
  METAL : Metal-film resistor
  METAL OXIDE : Metal Oxide-film resistor
  F : nonflammable
- –XX, –X mean standardized parts, so they may have some difference from the original one.
- SEMICONDUCTORS
  In each case, U : μ, for example:
  UA...: μA..., UPA...: μPA..., UPB...: μPB..., UPC...: μPC..., UPD...: μPD...
- CAPACITORS
  MF : μF, PF : μμF
- COILS
  MMH : mH, UH : μH

When indicating parts by reference number, please include the board name.

Ref.No	Part No.	Description		Remark
	*A-7061-977-A	SS-95 BOARD, COMPLETE (Ref.No 5000 Series) **********		
	1-562-880-11	CONNECTOR, CARD EDGE 15P		
		CAPACITOR		
C001	1-135-157-21	TANTAL. CHIP 10MF	20%	6.3V
C002	1-135-157-21	TANTAL. CHIP 10MF	20%	6.3V
C003	1-164-232-11	CERAMIC CHIP 0.01MF		50V
C004	1-135-155-21	TANTAL. CHIP 4.7MF	20%	16V
C005	1-163-035-00	CERAMIC CHIP 0.047MF		50V
C006	1-164-232-11	CERAMIC CHIP 0.01MF		50V
C007	1-163-095-00	CERAMIC CHIP 12PF	5%	50V
C008	1-163-095-00	CERAMIC CHIP 12PF	5%	50V
C009	1-163-038-00	CERAMIC CHIP 0.1MF		25V
C010	1-135-162-21	TANTAL. CHIP 33MF	20%	6.3V
C011	1-135-155-21	TANTAL. CHIP 4.7MF	20%	16V
C012	1-163-105-00	CERAMIC CHIP 33PF	5%	50V
C013	1-163-035-00	CERAMIC CHIP 0.047MF		50V
C014	1-164-232-11	CERAMIC CHIP 0.01MF		50V
C015	1-164-232-11	CERAMIC CHIP 0.01MF		50V
C016	1-164-232-11	CERAMIC CHIP 0.01MF		50V
C017	1-163-038-00	CERAMIC CHIP 0.1MF		25V
C018	1-135-072-21	TANTAL. CHIP 0.22MF	20%	35V
C019	1-163-009-11	CERAMIC CHIP 0.001MF		50V
C070	1-163-205-00	CERAMIC CHIP 0.001MF	5%	50V
C072	1-164-004-11	CERAMIC CHIP 0.1MF	10%	25V
C073	1-163-038-00	CERAMIC CHIP 0.1MF		25V
C075	1-164-232-11	CERAMIC CHIP 0.01MF		50V
C076	1-164-232-11	CERAMIC CHIP 0.01MF		50V
C077	1-163-059-00	CERAMIC CHIP 0.01MF	10%	50V
C101	1-163-037-11	CERAMIC CHIP 0.022MF	10%	25V
C102	1-124-257-00	ELECT 2.2MF	20%	35V
C103	1-163-038-00	CERAMIC CHIP 0.1MF		25V
C104	1-124-257-00	ELECT 2.2MF	20%	35V
C105	1-126-157-11	ELECT 10MF	20%	16V
C106	1-163-038-00	CERAMIC CHIP 0.1MF		25V
C107	1-163-038-00	CERAMIC CHIP 0.1MF		25V
C108	1-126-157-11	ELECT 10MF	20%	16V
C109	1-163-038-00	CERAMIC CHIP 0.1MF		25V
C110	1-124-257-00	ELECT 2.2MF	20%	35V
C111	1-163-038-00	CERAMIC CHIP 0.1MF		25V
C112	1-163-141-00	CERAMIC CHIP 0.001MF	5%	50V
C113	1-163-097-00	CERAMIC CHIP 15PF	5%	50V
C114	1-163-038-00	CERAMIC CHIP 0.1MF		25V
C115	1-126-151-11	ELECT 4.7MF	20%	16V
C116	1-124-257-00	ELECT 2.2MF	20%	35V
C117	1-163-133-00	CERAMIC CHIP 470PF	5%	50V
C118	1-163-129-00	CERAMIC CHIP 330PF	5%	50V
C119	1-163-038-00	CERAMIC CHIP 0.1MF		25V
C161	1-164-232-11	CERAMIC CHIP 0.01MF	10%	50V
C162	1-164-232-11	CERAMIC CHIP 0.01MF	10%	50V
C163	1-163-141-00	CERAMIC CHIP 0.001MF	5%	50V
C164	1-164-232-11	CERAMIC CHIP 0.01MF	10%	50V
C166	1-163-091-00	CERAMIC CHIP 8PF	0.25PF	50V
C167	1-164-232-11	CERAMIC CHIP 0.01MF	10%	50V
C168	1-163-038-00	CERAMIC CHIP 0.1MF		25V
C169	1-126-157-11	ELECT 10MF	20%	16V
C170	1-124-465-00	ELECT 0.47MF	20%	50V
C171	1-163-038-00	CERAMIC CHIP 0.1MF		25V
C172	1-126-157-11	ELECT 10MF	20%	16V
C173	1-124-465-00	ELECT 0.47MF	20%	50V
C200	1-135-157-21	TANTAL. CHIP 10MF	20%	6.3V
C202	1-135-149-21	TANTAL. CHIP 2.2MF	20%	10V
C203	1-135-157-21	TANTAL. CHIP 10MF	20%	6.3V
C204	1-124-779-00	ELECT CHIP 10MF	20%	16V
C205	1-124-779-00	ELECT CHIP 10MF	20%	16V
C206	1-135-177-21	TANTAL. CHIP 1MF	20%	20V
C207	1-135-177-21	TANTAL. CHIP 1MF	20%	20V
C208	1-124-779-00	ELECT CHIP 10MF	20%	16V
C209	1-135-159-21	TANTAL. CHIP 10MF	20%	16V
C211	1-127-539-11	ELECT(SOLID) 1MF	20%	25V
C212	1-135-177-21	TANTAL. CHIP 1MF	20%	20V
C213	1-135-154-21	TANTAL. CHIP 3.3MF	20%	20V
C214	1-162-638-11	CERAMIC CHIP 1MF		16V
C215	1-124-779-00	ELECT CHIP 10MF	20%	16V
C216	1-163-035-00	CERAMIC CHIP 0.047MF		50V
C217	1-163-038-00	CERAMIC CHIP 0.1MF		25V
C218	1-163-038-00	CERAMIC CHIP 0.1MF		25V
C219	1-163-038-00	CERAMIC CHIP 0.1MF		25V
C220	1-163-035-00	CERAMIC CHIP 0.047MF		50V
C221	1-163-019-00	CERAMIC CHIP 0.0068MF	10%	50V
C222	1-164-004-11	CERAMIC CHIP 0.1MF	10%	25V
C223	1-136-718-11	FILM CHIP 0.1MF	5%	25V
C224	1-124-589-11	ELECT 47MF	20%	16V
C225	1-127-558-11	ELECT(SOLID) 10MF	20%	10V
C226	1-163-023-00	CERAMIC CHIP 0.015MF		50V
C227	1-135-070-00	TANTAL. CHIP 0.1MF	20%	35V
C228	1-163-035-00	CERAMIC CHIP 0.047MF		50V
C229	1-163-123-00	CERAMIC CHIP 180PF	5%	50V
C230	1-135-070-00	TANTAL. CHIP 0.1MF	20%	35V
C231	1-163-095-00	CERAMIC CHIP 12PF	5%	50V
C232	1-163-101-00	CERAMIC CHIP 22PF	5%	50V
C233	1-127-558-11	ELECT(SOLID) 10MF	20%	10V
C234	1-163-097-00	CERAMIC CHIP 15PF	5%	50V
C235	1-163-101-00	CERAMIC CHIP 22PF	5%	50V
C236	1-127-558-11	ELECT(SOLID) 10MF	20%	10V
C237	1-163-009-11	CERAMIC CHIP 0.001MF	10%	50V
C238	1-163-035-00	CERAMIC CHIP 0.047MF		50V
C239	1-163-809-11	CERAMIC CHIP 0.047MF	10%	25V
C240	1-163-035-00	CERAMIC CHIP 0.047MF		50V
C241	1-163-035-00	CERAMIC CHIP 0.047MF		50V
C242	1-163-038-00	CERAMIC CHIP 0.1MF		25V
C244	1-135-154-21	TANTAL. CHIP 3.3MF	20%	20V
C245	1-164-004-11	CERAMIC CHIP 0.1MF	10%	25V
C246	1-163-038-00	CERAMIC CHIP 0.1MF		25V

SS-95

Ref.No	Part No.	Description		Remark
C310	1-163-109-00	CERAMIC CHIP 47PF	5%	50V
C311	1-163-109-00	CERAMIC CHIP 47PF	5%	50V
C312	1-135-157-21	TANTAL. CHIP 10MF	20%	6.3V
C313	1-163-038-00	CERAMIC CHIP 0.1MF		25V
C314	1-135-157-21	TANTAL. CHIP 10MF	20%	6.3V
C315	1-162-638-11	CERAMIC CHIP 1MF		16V
C316	1-163-009-11	CERAMIC CHIP 0.001MF	10%	50V
C317	1-163-037-11	CERAMIC CHIP 0.022MF	10%	25V
C318	1-163-037-11	CERAMIC CHIP 0.022MF	10%	25V
C319	1-163-009-11	CERAMIC CHIP 0.001MF	10%	50V
C320	1-163-125-00	CERAMIC CHIP 220PF	10%	50V
C321	1-163-017-00	CERAMIC CHIP 0.0047MF	10%	50V
C322	1-164-182-11	CERAMIC CHIP 0.0033MF	10%	50V
C323	1-163-009-11	CERAMIC CHIP 0.001MF	10%	50V
C324	1-164-004-11	CERAMIC CHIP 0.1MF	10%	25V
C325	1-163-077-00	CERAMIC CHIP 0.1MF	10%	25V
C326	1-163-075-00	CERAMIC CHIP 0.047MF	10%	25V
C327	1-163-075-00	CERAMIC CHIP 0.047MF	10%	25V
C328	1-163-133-00	CERAMIC CHIP 470PF	5%	50V
C329	1-163-141-00	CERAMIC CHIP 0.001MF	5%	50V
C330	1-163-109-00	CERAMIC CHIP 47PF	5%	50V
C331	1-163-145-00	CERAMIC CHIP 0.0015MF	5%	50V
C332	1-163-101-00	CERAMIC CHIP 22PF	5%	50V
C333	1-163-035-00	CERAMIC CHIP 0.047MF		50V
C334	1-162-638-11	CERAMIC CHIP 1MF		16V
C335	1-162-638-11	CERAMIC CHIP 1MF		16V
C336	1-163-059-00	CERAMIC CHIP 0.01MF	10%	50V

CONNECTOR

CN002	*1-566-195-11	PIN, CONNECTOR (PC BOARD) 2P	
CN003	*1-566-195-21	PIN, CONNECTOR (PC BOARD) 2P	
CN201	*1-566-197-61	PIN, CONNECTOR (PC BOARD) 4P	
CN202	*1-566-197-21	PIN, CONNECTOR (PC BOARD) 4P	
CN220	1-563-585-11	CONNECTOR, FLEXIBLE 8P	
CN221	*1-563-584-11	CONNECTOR, FLEXIBLE 7P	
CN222	1-568-123-11	CONNECTOR, FPC(SMT TYPE ZIF)18P	
CN224	*1-566-765-11	PIN, CONNECTOR (PC BOARD) 10P	
CN225	*1-566-766-11	PIN, CONNECTOR (PC BOARD) 11P	
CN228	*1-566-759-11	PIN, CONNECTOR (PC BOARD) 4P	
CN230	1-566-760-11	PIN, CONNECTOR (PC BOARD) 5P	

TRIMMER

CT101	1-141-404-11	CAP, VAR, TRIMMER (30PF)
CT161	1-141-331-11	CAP, VAR, TRIMMER (CHIP) (30PF)

DIODE

D005	8-719-104-31	DIODE MA152WK
D026	8-719-940-45	DIODE DWA010
D030	8-719-104-34	DIODE 1S2836
D101	8-719-420-36	DIODE MA151A
D102 ⚠	8-719-938-72	DIODE SB01-05CP
D103	8-719-420-36	DIODE MA151A
D105	8-719-940-45	DIODE DWA010
D161	8-713-300-88	DIODE 1T33C-01
D200	8-719-938-75	DIODE SB05-05CP
D201	8-719-938-75	DIODE SB05-05CP
D202	8-719-104-34	DIODE 1S2836

IC

IC001	8-752-809-71	IC CXP80116-646Q
IC002	8-759-804-72	IC LB1631M
IC003	8-759-013-22	IC LM358M
IC005	8-759-009-51	IC MC14538BF
IC101	8-759-145-48	IC UPD75316GF-041-3B9
IC102	8-759-145-63	IC UPD7564G-540
IC103	8-759-937-54	IC S-81250HG-RD-S
IC104	8-759-946-03	IC S-8054ALR-LN-S
IC161	8-759-983-52	IC MB87484
IC162	8-752-326-24	IC CXK58257M-12L
IC200	8-759-107-68	IC CX20115A
IC201	8-759-202-45	IC CX20114
IC202	8-759-805-06	IC CXA1127M
IC203	8-759-100-94	IC UPC358G2
IC204	8-759-945-17	IC MB3775PF
IC310	8-752-050-54	IC CXA1449Q

COIL

L001	1-412-058-11	INDUCTOR CHIP 10UH
L101	1-410-393-11	INDUCTOR CHIP 100UH
L102	1-410-369-11	INDUCTOR CHIP 1UH
L161	1-410-384-31	INDUCTOR CHIP 18UH
L162	1-410-369-11	INDUCTOR CHIP 1UH
L163	1-410-377-31	INDUCTOR CHIP 4.7UH
L200	1-412-058-11	INDUCTOR CHIP 10UH
L201	1-424-104-11	COIL, CHOKE 10UH
L202	1-424-106-11	COIL, CHOKE 47UH
L203	1-424-105-11	COIL, CHOKE 22UH
L310	1-412-058-11	INDUCTOR CHIP 10UH
L311	1-408-795-21	INDUCTOR CHIP 330UH
L312	1-412-058-11	INDUCTOR CHIP 10UH

TRANSISTOR

Q001	8-729-100-66	TRANSISTOR 2SC1623
Q003	8-729-100-66	TRANSISTOR 2SC1623
Q005	8-729-907-00	TRANSISTOR DTC114EU
Q006	8-729-104-95	TRANSISTOR 2SB1040A-5
Q007	8-729-905-35	TRANSISTOR 2SC4081-R
Q008	8-729-905-35	TRANSISTOR 2SC4081-R
Q010	8-729-900-52	TRANSISTOR DTC114YK
Q011	8-729-900-52	TRANSISTOR DTC114YK
Q012	8-729-901-01	TRANSISTOR DTC144EK
Q013	8-729-402-81	TRANSISTOR XN4501
Q014	8-729-905-35	TRANSISTOR 2SC4081-R
Q020	8-729-901-06	TRANSISTOR DTA144EK
Q021	8-729-901-01	TRANSISTOR DTC144EK

The components identified by mark ⚠ or dotted line with mark ⚠ are critical for safety.
Replace only with part number specified.

Les composants identifiés par une marque ⚠ sont critiques pour la sécurité.
Ne les remplacer que par une pièce portant le numéro spécifié.

When indicating parts by reference number, please include the board name.

Ref.No	Part No.	Description	Remark
Q023	8-729-920-39	TRANSISTOR IMT1US	
Q030	8-729-402-42	TRANSISTOR UN5213	
Q101	8-729-402-78	TRANSISTOR XN6401	
Q102	8-729-402-19	TRANSISTOR XN6501	
Q103	8-729-402-78	TRANSISTOR XN6401	
Q104	8-729-216-22	TRANSISTOR 2SA1162	
Q105 ⚠	8-729-109-44	TRANSISTOR 2SK94	
Q106	8-729-901-03	TRANSISTOR DTC144WK	
Q107	8-729-100-66	TRANSISTOR 2SC1623	
Q108	8-729-901-06	TRANSISTOR DTA144EK	
Q109	8-729-904-20	TRANSISTOR FMA2	
Q110	8-729-903-30	TRANSISTOR DTC114TK	
Q111	8-729-901-01	TRANSISTOR DTC144EK	
Q112	8-729-109-44	TRANSISTOR 2SK94	
Q113	8-729-902-96	TRANSISTOR FMS1	
Q114	8-729-903-82	TRANSISTOR FMW2	
Q115	8-729-100-66	TRANSISTOR 2SC1623	
Q116	8-729-901-01	TRANSISTOR DTC144EK	
Q161	8-729-901-01	TRANSISTOR DTC144EK	
Q200	8-729-403-35	TRANSISTOR UN5113	
Q201	8-729-216-22	TRANSISTOR 2SA1162	
Q202	8-729-905-35	TRANSISTOR 2SC4081-R	
Q203	8-729-403-35	TRANSISTOR UN5113	
Q204	8-729-905-61	TRANSISTOR DTC124EU	
Q205	8-729-402-42	TRANSISTOR UN5213	
Q206	8-729-100-66	TRANSISTOR 2SC1623	
Q207	8-729-805-25	TRANSISTOR 2SB1121	
Q208	8-729-119-83	TRANSISTOR 2SC4175-B3	
Q209	8-729-805-25	TRANSISTOR 2SB1121	
Q210	8-729-162-13	TRANSISTOR 2SC1621	
Q211	8-729-901-01	TRANSISTOR DTC144EK	
Q212	8-729-920-39	TRANSISTOR IMT1US	
Q213	8-729-402-42	TRANSISTOR UN5213	
Q214	8-729-901-04	TRANSISTOR DTA114EK	
Q310	8-729-216-22	TRANSISTOR 2SA1162	
Q311	8-729-905-35	TRANSISTOR 2SC4081-R	
Q312	8-729-117-16	TRANSISTOR 2SA1611-M6	
Q313	8-729-905-35	TRANSISTOR 2SC4081-R	
Q314	8-729-100-66	TRANSISTOR 2SC1623	

RESISTOR

Ref.No	Part No.	Description				Remark
R001	1-216-097-00	METAL GLAZE	100K	5%	1/10W	
R005	1-216-097-00	METAL GLAZE	100K	5%	1/10W	
R006	1-216-073-00	METAL GLAZE	10K	5%	1/10W	
R010	1-216-073-00	METAL GLAZE	10K	5%	1/10W	
R011	1-216-073-00	METAL GLAZE	10K	5%	1/10W	
R013	1-216-025-00	METAL GLAZE	100	5%	1/10W	
R014	1-216-073-00	METAL GLAZE	10K	5%	1/10W	
R015	1-216-043-00	METAL GLAZE	560	5%	1/10W	
R019	1-216-073-00	METAL GLAZE	10K	5%	1/10W	
R020	1-216-073-00	METAL GLAZE	10K	5%	1/10W	
R021	1-216-105-00	METAL GLAZE	220K	5%	1/10W	
R022	1-216-105-00	METAL GLAZE	220K	5%	1/10W	
R023	1-216-061-00	METAL GLAZE	3.3K	5%	1/10W	
R024	1-216-061-00	METAL GLAZE	3.3K	5%	1/10W	
R025	1-216-073-00	METAL GLAZE	10K	5%	1/10W	
R026	1-216-073-00	METAL GLAZE	10K	5%	1/10W	
R027	1-216-073-00	METAL GLAZE	10K	5%	1/10W	
R028	1-216-073-00	METAL GLAZE	10K	5%	1/10W	
R029	1-216-097-00	METAL GLAZE	100K	5%	1/10W	
R030	1-216-097-00	METAL GLAZE	100K	5%	1/10W	
R031	1-216-097-00	METAL GLAZE	100K	5%	1/10W	
R032	1-216-097-00	METAL GLAZE	100K	5%	1/10W	
R033	1-216-049-00	METAL GLAZE	1K	5%	1/10W	
R034	1-216-037-00	METAL GLAZE	330	5%	1/10W	
R035	1-216-097-00	METAL GLAZE	100K	5%	1/10W	
R036	1-216-049-00	METAL GLAZE	1K	5%	1/10W	
R037	1-216-097-00	METAL GLAZE	100K	5%	1/10W	
R038	1-216-699-11	METAL CHIP	100K	0.50%	1/10W	
R039	1-216-699-11	METAL CHIP	100K	0.50%	1/10W	
R040	1-216-081-00	METAL GLAZE	22K	5%	1/10W	
R041	1-216-097-00	METAL GLAZE	100K	5%	1/10W	
R042	1-216-097-00	METAL GLAZE	100K	5%	1/10W	
R043	1-216-093-00	METAL GLAZE	68K	5%	1/10W	
R044	1-216-059-00	METAL GLAZE	2.7K	5%	1/10W	
R045	1-216-097-00	METAL GLAZE	100K	5%	1/10W	
R046	1-216-073-00	METAL GLAZE	10K	5%	1/10W	
R047	1-216-065-00	METAL GLAZE	4.7K	5%	1/10W	
R052	1-216-049-00	METAL GLAZE	1K	5%	1/10W	
R053	1-216-049-00	METAL GLAZE	1K	5%	1/10W	
R054	1-216-049-00	METAL GLAZE	1K	5%	1/10W	
R055	1-216-097-00	METAL GLAZE	100K	5%	1/10W	
R056	1-216-097-00	METAL GLAZE	100K	5%	1/10W	
R059	1-216-057-00	METAL GLAZE	2.2K	5%	1/10W	
R070	1-216-699-11	METAL CHIP	100K	0.50%	1/10W	
R071	1-216-700-11	METAL GLAZE	470K	1%	1/10W	
R072	1-216-687-11	METAL CHIP	33K	0.50%	1/10W	
R073	1-216-089-00	METAL GLAZE	47K	5%	1/10W	
R074	1-216-089-00	METAL GLAZE	47K	5%	1/10W	
R075	1-216-295-00	METAL GLAZE	0	5%	1/10W	
R076	1-216-073-00	METAL GLAZE	10K	5%	1/10W	
R077	1-216-295-00	METAL GLAZE	0	5%	1/10W	
R078	1-216-073-00	METAL GLAZE	10K	5%	1/10W	
R080	1-216-089-00	METAL GLAZE	47K	5%	1/10W	
R101	1-218-172-11	METAL GLAZE	680K	1%	1/10W	
R102	1-216-121-00	METAL GLAZE	1M	5%	1/10W	
R103	1-218-172-11	METAL GLAZE	680K	1%	1/10W	
R104	1-216-097-00	METAL GLAZE	100K	1%	1/10W	
R105	1-216-121-00	METAL GLAZE	1M	5%	1/10W	
R106	1-216-111-00	METAL GLAZE	390K	5%	1/10W	
R107	1-216-097-00	METAL GLAZE	100K	5%	1/10W	
R108	1-216-097-00	METAL GLAZE	100K	5%	1/10W	
R109	1-216-097-00	METAL GLAZE	100K	5%	1/10W	
R110	1-216-097-00	METAL GLAZE	100K	5%	1/10W	
R111	1-216-097-00	METAL GLAZE	100K	5%	1/10W	
R112	1-216-073-00	METAL GLAZE	10K	5%	1/10W	

The components identified by mark ⚠ or dotted line with mark ⚠ are critical for safety.
Replace only with part number specified.

Les composants identifiés par une marque ⚠ sont critiques pour la sécurité.
Ne les remplacer que par une pièce portant le numéro spécifié.

When indicating parts by reference number, please include the board name.

SS-95

Ref.No	Part No.	Description				Remark
R113	1-216-109-00	METAL GLAZE	330K	5%	1/10W	
R114 ⚠	1-216-025-00	METAL GLAZE	100	5%	1/10W	
R115	1-216-129-00	METAL GLAZE	2.2M	5%	1/10W	
R116	1-216-097-00	METAL GLAZE	100K	5%	1/10W	
R117	1-216-085-00	METAL GLAZE	33K	5%	1/10W	
R118	1-216-093-00	METAL GLAZE	68K	5%	1/10W	
R119	1-216-089-00	METAL GLAZE	47K	5%	1/10W	
R120	1-216-089-00	METAL GLAZE	47K	5%	1/10W	
R121	1-216-089-00	METAL GLAZE	47K	5%	1/10W	
R122	1-216-041-00	METAL GLAZE	470	5%	1/10W	
R123	1-216-033-00	METAL GLAZE	220	5%	1/10W	
R124	1-216-033-00	METAL GLAZE	220	5%	1/10W	
R125	1-216-033-00	METAL GLAZE	220	5%	1/10W	
R126	1-216-033-00	METAL GLAZE	220	5%	1/10W	
R127	1-216-025-00	METAL GLAZE	100	5%	1/10W	
R128	1-216-025-00	METAL GLAZE	100	5%	1/10W	
R129	1-216-089-00	METAL GLAZE	47K	5%	1/10W	
R130	1-216-025-00	METAL GLAZE	100	5%	1/10W	
R131	1-216-041-00	METAL GLAZE	470	5%	1/10W	
R132	1-216-041-00	METAL GLAZE	470	5%	1/10W	
R133	1-216-041-00	METAL GLAZE	470	5%	1/10W	
R134	1-216-041-00	METAL GLAZE	470	5%	1/10W	
R135	1-216-041-00	METAL GLAZE	470	5%	1/10W	
R136	1-216-081-00	METAL GLAZE	22K	5%	1/10W	
R137	1-216-081-00	METAL GLAZE	22K	5%	1/10W	
R138	1-216-081-00	METAL GLAZE	22K	5%	1/10W	
R139	1-216-081-00	METAL GLAZE	22K	5%	1/10W	
R140	1-216-081-00	METAL GLAZE	22K	5%	1/10W	
R141	1-216-081-00	METAL GLAZE	22K	5%	1/10W	
R142	1-216-081-00	METAL GLAZE	22K	5%	1/10W	
R143	1-216-081-00	METAL GLAZE	22K	5%	1/10W	
R144	1-216-073-00	METAL GLAZE	10K	5%	1/10W	
R145	1-216-073-00	METAL GLAZE	10K	5%	1/10W	
R146	1-216-073-00	METAL GLAZE	10K	5%	1/10W	
R147	1-216-073-00	METAL GLAZE	10K	5%	1/10W	
R148	1-216-073-00	METAL GLAZE	10K	5%	1/10W	
R149	1-216-073-00	METAL GLAZE	10K	5%	1/10W	
R150	1-216-073-00	METAL GLAZE	10K	5%	1/10W	
R151	1-216-073-00	METAL GLAZE	10K	5%	1/10W	
R152	1-216-109-00	METAL GLAZE	330K	5%	1/10W	
R153	1-216-049-00	METAL GLAZE	1K	5%	1/10W	
R154	1-216-089-00	METAL GLAZE	47K	5%	1/10W	
R155	1-216-295-00	METAL GLAZE	0	5%	1/10W	
R156	1-216-033-00	METAL GLAZE	220	5%	1/10W	
R157	1-216-041-00	METAL GLAZE	470	5%	1/10W	
R158	1-216-033-00	METAL GLAZE	220	5%	1/10W	
R159	1-216-033-00	METAL GLAZE	220	5%	1/10W	
R160	1-216-033-00	METAL GLAZE	220	5%	1/10W	
R161	1-216-033-00	METAL GLAZE	220	5%	1/10W	
R162	1-216-073-00	METAL GLAZE	10K	5%	1/10W	
R163	1-216-049-00	METAL GLAZE	1K	5%	1/10W	
R164	1-216-073-00	METAL GLAZE	10K	5%	1/10W	
R165	1-216-057-00	METAL GLAZE	2.2K	5%	1/10W	

Ref.No	Part No.	Description				Remark
R166	1-216-073-00	METAL GLAZE	10K	5%	1/10W	
R167	1-216-073-00	METAL GLAZE	10K	5%	1/10W	
R168	1-216-101-00	METAL GLAZE	150K	5%	1/10W	
R169	1-216-101-00	METAL GLAZE	150K	5%	1/10W	
R170	1-216-065-00	METAL GLAZE	4.7K	5%	1/10W	
R171	1-216-073-00	METAL GLAZE	10K	5%	1/10W	
R172	1-216-073-00	METAL GLAZE	10K	5%	1/10W	
R173	1-216-073-00	METAL GLAZE	10K	5%	1/10W	
R174	1-216-073-00	METAL GLAZE	10K	5%	1/10W	
R175	1-216-039-00	METAL GLAZE	390	5%	1/10W	
R176	1-216-121-00	METAL GLAZE	1M	5%	1/10W	
R177	1-216-083-00	METAL GLAZE	27K	5%	1/10W	
R178	1-216-083-00	METAL GLAZE	27K	5%	1/10W	
R179	1-216-071-00	METAL GLAZE	8.2K	5%	1/10W	
R180	1-216-109-00	METAL GLAZE	330K	5%	1/10W	
R181	1-216-077-00	METAL GLAZE	15K	5%	1/10W	
R182	1-216-121-00	METAL GLAZE	1M	5%	1/10W	
R183	1-216-097-00	METAL GLAZE	100K	5%	1/10W	
R184	1-216-073-00	METAL GLAZE	10K	5%	1/10W	
R185	1-216-073-00	METAL GLAZE	10K	5%	1/10W	
R186	1-216-039-00	METAL GLAZE	390	5%	1/10W	
R187	1-216-295-00	METAL GLAZE	0	5%	1/10W	
R188	1-216-097-00	METAL GLAZE	100K	5%	1/10W	
R200	1-216-113-00	METAL GLAZE	470K	5%	1/10W	
R201	1-216-095-00	METAL GLAZE	82K	5%	1/10W	
R202	1-216-095-00	METAL GLAZE	82K	5%	1/10W	
R203	1-216-081-00	METAL GLAZE	22K	5%	1/10W	
R204	1-216-089-00	METAL GLAZE	47K	5%	1/10W	
R205	1-216-049-00	METAL GLAZE	1K	5%	1/10W	
R206	1-216-073-00	METAL GLAZE	10K	5%	1/10W	
R208	1-216-085-00	METAL GLAZE	33K	5%	1/10W	
R209	1-216-101-00	METAL GLAZE	150K	5%	1/10W	
R210	1-216-085-00	METAL GLAZE	33K	5%	1/10W	
R211	1-216-081-00	METAL GLAZE	22K	5%	1/10W	
R212	1-216-025-00	METAL GLAZE	100	5%	1/10W	
R213	1-216-081-00	METAL GLAZE	22K	5%	1/10W	
R216	1-216-047-00	METAL GLAZE	820	5%	1/10W	
R217	1-216-035-00	METAL GLAZE	270	5%	1/10W	
R218	1-216-067-00	METAL GLAZE	5.6K	5%	1/10W	
R219	1-216-298-00	METAL GLAZE	2.2	5%	1/10W	
R220	1-216-298-00	METAL GLAZE	2.2	5%	1/10W	
R221	1-216-298-00	METAL GLAZE	2.2	5%	1/10W	
R222	1-216-691-11	METAL CHIP	47K	0.50%	1/10W	
R223	1-216-691-11	METAL CHIP	47K	0.50%	1/10W	
R224	1-216-073-00	METAL GLAZE	10K	5%	1/10W	
R225	1-216-073-00	METAL GLAZE	10K	5%	1/10W	
R226	1-216-073-00	METAL GLAZE	10K	5%	1/10W	
R227	1-216-097-00	METAL GLAZE	100K	5%	1/10W	
R228	1-216-097-00	METAL GLAZE	100K	5%	1/10W	
R229	1-216-089-00	METAL GLAZE	47K	5%	1/10W	
R230	1-216-097-00	METAL GLAZE	100K	5%	1/10W	
R231	1-216-069-00	METAL GLAZE	6.8K	5%	1/10W	
R232	1-216-063-00	METAL GLAZE	3.9K	5%	1/10W	

The components identified by mark ⚠ or dotted line with mark ⚠ are critical for safety.
Replace only with part number specified.

Les composants identifiés par une marque ⚠ sont critiques pour la sécurité.
Ne les remplacer que par une pièce portant le numéro spécifé.

When indicating parts by reference number, please include the board name.

Ref.No	Part No.	Description				Remark
R233	1-216-069-00	METAL GLAZE	6.8K	5%	1/10W	
R234	1-216-063-00	METAL GLAZE	3.9K	5%	1/10W	
R235	1-216-069-00	METAL GLAZE	6.8K	5%	1/10W	
R236	1-216-055-00	METAL GLAZE	1.8K	5%	1/10W	
R237	1-216-067-00	METAL GLAZE	5.6K	5%	1/10W	
R238	1-216-055-00	METAL GLAZE	1.8K	5%	1/10W	
R239	1-216-067-00	METAL GLAZE	5.6K	5%	1/10W	
R240	1-216-033-00	METAL GLAZE	220	5%	1/10W	
R241	1-216-057-00	METAL GLAZE	2.2K	5%	1/10W	
R242	1-216-089-00	METAL GLAZE	47K	5%	1/10W	
R243	1-216-045-00	METAL GLAZE	680	5%	1/10W	
R244	1-216-057-00	METAL GLAZE	2.2K	5%	1/10W	
R245	1-216-089-00	METAL GLAZE	47K	5%	1/10W	
R246	1-216-045-00	METAL GLAZE	680	5%	1/10W	
R247	1-216-073-00	METAL GLAZE	10K	5%	1/10W	
R248	1-216-073-00	METAL GLAZE	10K	5%	1/10W	
R249	1-216-079-00	METAL GLAZE	18K	5%	1/10W	
R250	1-216-097-00	METAL GLAZE	100K	5%	1/10W	
R251	1-216-081-00	METAL GLAZE	22K	5%	1/10W	
R252	1-216-065-00	METAL GLAZE	4.7K	5%	1/10W	
R253	1-216-089-00	METAL GLAZE	47K	5%	1/10W	
R254	1-216-073-00	METAL GLAZE	10K	5%	1/10W	
R281	1-216-063-00	METAL GLAZE	3.9K	5%	1/10W	
R282	1-216-055-00	METAL GLAZE	1.8K	5%	1/10W	
R283	1-216-295-00	METAL GLAZE	0	5%	1/10W	
R310	1-216-121-00	METAL GLAZE	1M	5%	1/10W	
R311	1-216-051-00	METAL GLAZE	1.2K	5%	1/10W	
R312	1-216-041-00	METAL GLAZE	470	5%	1/10W	
R313	1-216-041-00	METAL GLAZE	470	5%	1/10W	
R314	1-216-085-00	METAL GLAZE	33K	5%	1/10W	
R315	1-216-043-00	METAL GLAZE	560	5%	1/10W	
R316	1-216-035-00	METAL GLAZE	270	5%	1/10W	
R317	1-216-031-00	METAL GLAZE	180	5%	1/10W	
R318	1-216-748-11	METAL GLAZE	39K	5%	1/10W	
R322	1-216-057-00	METAL GLAZE	2.2K	5%	1/10W	
R323	1-216-081-00	METAL GLAZE	22K	5%	1/10W	
R324	1-216-069-00	METAL GLAZE	6.8K	5%	1/10W	
R325	1-216-071-00	METAL GLAZE	8.2K	5%	1/10W	
R326	1-216-061-00	METAL GLAZE	3.3K	5%	1/10W	
R327	1-216-061-00	METAL GLAZE	3.3K	5%	1/10W	
R328	1-216-065-00	METAL GLAZE	4.7K	5%	1/10W	
R329	1-216-061-00	METAL GLAZE	3.3K	5%	1/10W	
R330	1-216-061-00	METAL GLAZE	3.3K	5%	1/10W	
R331	1-216-065-00	METAL GLAZE	4.7K	5%	1/10W	
R332	1-216-081-00	METAL GLAZE	22K	5%	1/10W	
R333	1-216-081-00	METAL GLAZE	22K	5%	1/10W	
R335	1-216-117-00	METAL GLAZE	680K	5%	1/10W	
R336	1-216-065-00	METAL GLAZE	4.7K	5%	1/10W	
R339	1-216-049-00	METAL GLAZE	1K	5%	1/10W	
R340	1-216-065-00	METAL GLAZE	4.7K	5%	1/10W	
R370	1-216-057-00	METAL GLAZE	2.2K	5%	1/10W	
R371	1-216-049-00	METAL GLAZE	1K	5%	1/10W	
R372	1-216-057-00	METAL GLAZE	2.2K	5%	1/10W	
R373	1-216-073-00	METAL GLAZE	10K	5%	1/10W	
R374	1-216-073-00	METAL GLAZE	10K	5%	1/10W	
R376	1-216-073-00	METAL GLAZE	10K	5%	1/10W	
R377	1-216-073-00	METAL GLAZE	10K	5%	1/10W	
R378	1-216-073-00	METAL GLAZE	10K	5%	1/10W	
R379	1-216-073-00	METAL GLAZE	10K	5%	1/10W	
R381	1-216-073-00	METAL GLAZE	10K	5%	1/10W	
R383	1-216-073-00	METAL GLAZE	10K	5%	1/10W	
R384	1-216-073-00	METAL GLAZE	10K	5%	1/10W	
R386	1-216-065-00	METAL GLAZE	4.7K	5%	1/10W	
R387	1-216-073-00	METAL GLAZE	10K	5%	1/10W	
R388	1-216-073-00	METAL GLAZE	10K	5%	1/10W	
R389	1-216-065-00	METAL GLAZE	4.7K	5%	1/10W	
R390	1-216-097-00	METAL GLAZE	100K	5%	1/10W	
R391	1-216-097-00	METAL GLAZE	100K	5%	1/10W	
R392	1-216-073-00	METAL GLAZE	10K	5%	1/10W	
R393	1-216-073-00	METAL GLAZE	10K	5%	1/10W	
R394	1-216-041-00	METAL GLAZE	470	5%	1/10W	
R395	1-216-041-00	METAL GLAZE	470	5%	1/10W	

VARIABLE RESISTOR

RV001	1-238-225-11	RES, ADJ, METAL GLAZE 47K
RV002	1-238-226-11	RES, ADJ, METAL GLAZE 100K
RV200	1-238-228-11	RES, ADJ, METAL GLAZE 470K
RV201	1-230-869-11	RES, ADJ, METAL GLAZE 4.7K
RV310	1-238-223-11	RES, ADJ, METAL GLAZE 10K

THERMISTOR

TH001	1-800-200-00	THERMISTOR

TERMINAL

TP003	*1-535-622-11	PIN, TERMINAL
TP004	*1-535-622-11	PIN, TERMINAL

FLEXIBLE BOARD

W002	1-633-614-11	FP-216 FLEXIBLE BOARD
W004	1-633-616-11	FP-240 FLEXIBLE BOARD
W006	1-574-880-11	WIRE, FLAT TYPE PVC (14 CORE)

CRYSTAL

X001	1-577-116-21	VIBRATOR, CRYSTAL (16MHz)
X101	1-577-291-11	VIBRATOR, CERAMIC (WITH (C))
X102	1-527-997-21	VIBRATOR, CRYSTAL (32.768KHz)
X103	1-567-884-11	OSCILLATOR, CERAMIC (700KHz)
X310	1-567-735-11	VIBRATOR, CRYSTAL (5.94755MHz)

****

When indicating parts by reference number, please include the board name.

VI-66

Ref.No	Part No.	Description		Remark
	*A-7061-978-A	VI-66 BOARD, COMPLETE (Ref.No 4,000 Series) **********		
	A-7068-168-A	HD-8 (HIC) BOARD, COMPLETE		
		CAPACITOR		
C251	1-162-974-11	CERAMIC CHIP 0.01MF		50V
C252	1-124-778-00	ELECT CHIP 22MF	20%	6.3V
C253	1-163-035-00	CERAMIC CHIP 0.047MF		50V
C254	1-162-955-11	CERAMIC CHIP 150PF	5%	50V
C255	1-162-951-11	CERAMIC CHIP 68PF	5%	50V
C259	1-162-938-11	CERAMIC CHIP 7PF	0.5PF	50V
C260	1-162-952-11	CERAMIC CHIP 82PF	5%	50V
C262	1-162-950-11	CERAMIC CHIP 56PF	5%	50V
C264	1-162-974-11	CERAMIC CHIP 0.01MF		50V
C265	1-162-974-11	CERAMIC CHIP 0.01MF		50V
C266	1-162-974-11	CERAMIC CHIP 0.01MF		50V
C267	1-162-974-11	CERAMIC CHIP 0.01MF		50V
C268	1-162-974-11	CERAMIC CHIP 0.01MF		50V
C269	1-162-974-11	CERAMIC CHIP 0.01MF		50V
C270	1-162-974-11	CERAMIC CHIP 0.01MF		50V
C271	1-135-157-21	TANTAL. CHIP 10MF	20%	6.3V
C272	1-162-974-11	CERAMIC CHIP 0.01MF		50V
C273	1-162-974-11	CERAMIC CHIP 0.01MF		50V
C274	1-162-974-11	CERAMIC CHIP 0.01MF		50V
C275	1-162-954-11	CERAMIC CHIP 120PF	5%	50V
C276	1-162-951-11	CERAMIC CHIP 68PF	5%	50V
C277	1-163-035-00	CERAMIC CHIP 0.047MF		50V
C278	1-162-974-11	CERAMIC CHIP 0.01MF		50V
C279	1-162-974-11	CERAMIC CHIP 0.01MF		50V
C402	1-162-974-11	CERAMIC CHIP 0.01MF		50V
C403	1-163-809-11	CERAMIC CHIP 0.047MF	10%	25V
C405	1-162-974-11	CERAMIC CHIP 0.01MF		50V
C406	1-135-149-21	TANTAL. CHIP 2.2MF	20%	6.3V
C407	1-163-038-00	CERAMIC CHIP 0.1MF		25V
C408	1-135-149-21	TANTAL. CHIP 2.2MF	20%	6.3V
C409	1-163-038-00	CERAMIC CHIP 0.1MF		25V
C411	1-162-974-11	CERAMIC CHIP 0.01MF		50V
C412	1-163-038-00	CERAMIC CHIP 0.1MF		25V
C413	1-135-155-21	TANTAL. CHIP 4.7MF	20%	10V
C414	1-162-974-11	CERAMIC CHIP 0.01MF		50V
C415	1-162-970-11	CERAMIC CHIP 0.01MF	10%	25V
C416	1-163-009-11	CERAMIC CHIP 0.001MF	10%	50V
C417	1-162-997-11	CERAMIC CHIP 10PF	0.5PF	50V
C418	1-163-123-00	CERAMIC CHIP 180PF	5%	50V
C419	1-162-962-11	CERAMIC CHIP 470PF	10%	50V
C420	1-162-974-11	CERAMIC CHIP 0.01MF		50V
C421	1-162-974-11	CERAMIC CHIP 0.01MF		50V
C422	1-135-159-21	TANTAL. CHIP 10MF	20%	16V
C426	1-163-141-00	CERAMIC CHIP 0.001MF	5%	50V
C427	1-135-180-21	TANTAL. CHIP 3.3MF	20%	6.3V
C428	1-135-157-21	TANTAL. CHIP 10MF	20%	4V
C429	1-162-974-11	CERAMIC CHIP 0.01MF		50V
C430	1-135-155-21	TANTAL. CHIP 4.7MF	20%	10V
C431	1-163-035-00	CERAMIC CHIP 0.047MF		50V

Ref.No	Part No.	Description		Remark
C432	1-162-910-11	CERAMIC CHIP 5PF	0.25PF	50V
C433	1-162-923-11	CERAMIC CHIP 47PF	5%	50V
C434	1-135-149-21	TANTAL. CHIP 2.2MF	20%	6.3V
C435	1-163-131-00	CERAMIC CHIP 390PF	5%	50V
C436	1-163-129-00	CERAMIC CHIP 330PF	5%	50V
C437	1-163-121-00	CERAMIC CHIP 150PF	5%	50V
C438	1-163-121-00	CERAMIC CHIP 150PF	5%	50V
C439	1-162-964-11	CERAMIC CHIP 0.001MF	10%	50V
C440	1-163-038-00	CERAMIC CHIP 0.1MF		25V
C441	1-163-010-11	CERAMIC CHIP 0.0012MF	10%	50V
C442	1-135-180-21	TANTAL. CHIP 3.3MF	20%	6.3V
C443	1-163-035-00	CERAMIC CHIP 0.047MF		50V
C444	1-135-155-21	TANTAL. CHIP 4.7MF	20%	10V
C445	1-163-809-11	CERAMIC CHIP 0.047MF	10%	25V
C447	1-135-155-21	TANTAL. CHIP 4.7MF	20%	10V
C448	1-135-162-21	TANTAL. CHIP 33MF	20%	4V
C449	1-163-035-00	CERAMIC CHIP 0.047MF		50V
C450	1-162-951-11	CERAMIC CHIP 68PF	5%	50V
C452	1-126-603-11	ELECT CHIP 4.7MF	20%	35V
C453	1-163-035-00	CERAMIC CHIP 0.047MF		50V
C454	1-126-603-11	ELECT CHIP 4.7MF	20%	35V
C456	1-135-155-21	TANTAL. CHIP 4.7MF	20%	10V
C457	1-163-035-00	CERAMIC CHIP 0.047MF		50V
C458	1-163-035-00	CERAMIC CHIP 0.047MF		50V
C459	1-131-388-00	TANTALUM 68MF	10%	6.3V
C460	1-135-155-21	TANTAL. CHIP 4.7MF	20%	10V
C461	1-163-035-00	CERAMIC CHIP 0.047MF		50V
C462	1-162-974-11	CERAMIC CHIP 0.01MF		50V
C463	1-162-964-11	CERAMIC CHIP 0.001MF	10%	50V
C464	1-163-038-00	CERAMIC CHIP 0.1MF		25V
C465	1-163-035-00	CERAMIC CHIP 0.047MF		50V
C466	1-163-005-11	CERAMIC CHIP 470PF	10%	50V
C467	1-163-038-00	CERAMIC CHIP 0.1MF		25V
C468	1-163-035-00	CERAMIC CHIP 0.047MF		50V
C469	1-135-157-21	TANTAL. CHIP 10MF	20%	4V
C470	1-135-157-21	TANTAL. CHIP 10MF	20%	4V
C471	1-135-072-21	TANTAL. CHIP 0.22MF	20%	35V
C472	1-163-129-00	CERAMIC CHIP 330PF	5%	50V
C473	1-162-953-11	CERAMIC CHIP 100PF	5%	50V
C475	1-126-207-11	ELECT CHIP 33MF	20%	4V
C476	1-162-944-11	CERAMIC CHIP 18PF	5%	50V
C478	1-163-135-00	CERAMIC CHIP 560PF	5%	50V
C479	1-163-038-00	CERAMIC CHIP 0.1MF		25V
C480	1-163-038-00	CERAMIC CHIP 0.1MF		25V
C481	1-162-951-11	CERAMIC CHIP 68PF	5%	50V
C482	1-162-948-11	CERAMIC CHIP 39PF	5%	50V
C483	1-163-129-00	CERAMIC CHIP 330PF	5%	50V
C486	1-135-155-21	TANTAL. CHIP 4.7MF	20%	10V
C487	1-163-035-00	CERAMIC CHIP 0.047MF		50V
C488	1-135-155-21	TANTAL. CHIP 4.7MF	20%	10V
C489	1-163-035-00	CERAMIC CHIP 0.047MF		50V
C493	1-163-035-00	CERAMIC CHIP 0.047MF		50V
C494	1-163-035-00	CERAMIC CHIP 0.047MF		50V

When indicating parts by reference number, please include the board name.

Ref.No	Part No.	Description		Remark
C495	1-162-917-11	CERAMIC CHIP 15PF	5%	50V
C496	1-162-944-11	CERAMIC CHIP 18PF	5%	50V
C497	1-162-946-11	CERAMIC CHIP 27PF	5%	50V
C498	1-163-035-00	CERAMIC CHIP 0.047MF		50V
C499	1-162-974-11	CERAMIC CHIP 0.01MF		50V
C500	1-162-974-11	CERAMIC CHIP 0.01MF		50V
C501	1-162-974-11	CERAMIC CHIP 0.01MF		50V
C502	1-162-974-11	CERAMIC CHIP 0.01MF		50V
C505	1-164-232-11	CERAMIC CHIP 0.01MF	10%	50V
C506	1-163-009-11	CERAMIC CHIP 0.001MF	10%	50V
C507	1-162-921-11	CERAMIC CHIP 33PF	5%	50V
C512	1-162-941-11	CERAMIC CHIP 10PF	0.5PF	50V
C513	1-163-035-00	CERAMIC CHIP 0.047MF		50V
C515	1-162-974-11	CERAMIC CHIP 0.01MF		50V
C516	1-162-955-11	CERAMIC CHIP 150PF	5%	50V
C517	1-162-956-11	CERAMIC CHIP 180PF	5%	50V
C518	1-162-974-11	CERAMIC CHIP 0.01MF		50V
C519	1-163-035-00	CERAMIC CHIP 0.047MF		50V
C520	1-163-035-00	CERAMIC CHIP 0.047MF		50V
C522	1-162-945-11	CERAMIC CHIP 22PF	5%	50V
C524	1-162-944-11	CERAMIC CHIP 18PF	5%	50V
C525	1-163-133-00	CERAMIC CHIP 470PF	5%	50V
C526	1-135-181-21	TANTAL. CHIP 4.7MF	20%	6.3V
C527	1-163-038-00	CERAMIC CHIP 0.1MF		25V
C528	1-163-038-00	CERAMIC CHIP 0.1MF		25V
C529	1-163-131-00	CERAMIC CHIP 390PF	5%	50V
C532	1-162-944-11	CERAMIC CHIP 18PF	5%	50V
C533	1-163-809-11	CERAMIC CHIP 0.047MF	10%	25V
C534	1-162-974-11	CERAMIC CHIP 0.01MF		50V
C535	1-162-970-11	CERAMIC CHIP 0.01MF	10%	25V
C536	1-162-970-11	CERAMIC CHIP 0.01MF	10%	25V
C537	1-163-038-00	CERAMIC CHIP 0.1MF		25V
C538	1-162-954-11	CERAMIC CHIP 120PF	5%	50V
C540	1-162-950-11	CERAMIC CHIP 56PF	5%	50V
C541	1-164-232-11	CERAMIC CHIP 0.01MF	10%	50V
C542	1-163-038-00	CERAMIC CHIP 0.1MF		25V
C543	1-162-956-11	CERAMIC CHIP 180PF	5%	50V
C545	1-162-964-11	CERAMIC CHIP 0.001MF	10%	50V
C601	1-162-949-11	CERAMIC CHIP 47PF	5%	50V
C602	1-164-182-11	CERAMIC CHIP 0.0033MF	10%	50V
C603	1-126-603-11	ELECT CHIP 4.7MF	20%	35V
C604	1-162-974-11	CERAMIC CHIP 0.01MF		50V
C605	1-163-003-11	CERAMIC CHIP 330PF	10%	50V
C607	1-163-009-11	CERAMIC CHIP 0.001MF	10%	50V
C608	1-163-035-00	CERAMIC CHIP 0.047MF		50V
C609	1-163-117-00	CERAMIC CHIP 100PF	5%	50V
C610	1-163-115-00	CERAMIC CHIP 82PF	5%	50V
C611	1-135-091-00	TANTAL. CHIP 1MF	20%	16V
C612	1-162-974-11	CERAMIC CHIP 0.01MF		50V
C613	1-163-037-11	CERAMIC CHIP 0.022MF	10%	25V
C614	1-135-072-21	TANTAL. CHIP 0.22MF	20%	35V
C615	1-135-149-21	TANTAL. CHIP 2.2MF	20%	6.3V
C616	1-163-009-11	CERAMIC CHIP 0.001MF	10%	50V
C617	1-163-035-00	CERAMIC CHIP 0.047MF		50V
C620	1-162-964-11	CERAMIC CHIP 0.001MF	10%	50V
C621	1-163-037-11	CERAMIC CHIP 0.022MF	10%	25V
C622	1-135-170-21	TANTAL. CHIP 6.8MF	20%	4V
C623	1-162-974-11	CERAMIC CHIP 0.01MF		50V
C624	1-135-149-21	TANTAL. CHIP 2.2MF	20%	6.3V
C625	1-162-961-11	CERAMIC CHIP 330PF	10%	50V
C626	1-162-961-11	CERAMIC CHIP 330PF	10%	50V
C627	1-163-009-11	CERAMIC CHIP 0.001MF	10%	50V
C628	1-162-917-11	CERAMIC CHIP 15PF	5%	50V
C629	1-163-109-00	CERAMIC CHIP 47PF	5%	50V
C630	1-135-073-00	TANTAL. CHIP 0.33MF	20%	35V
C631	1-163-038-00	CERAMIC CHIP 0.1MF		25V
C632	1-162-950-11	CERAMIC CHIP 56PF	5%	50V
C633	1-163-117-00	CERAMIC CHIP 100PF	5%	50V
C634	1-162-957-11	CERAMIC CHIP 220PF	5%	50V
C635	1-162-951-11	CERAMIC CHIP 68PF	5%	50V
C637	1-164-232-11	CERAMIC CHIP 0.01MF		50V
C638	1-163-009-11	CERAMIC CHIP 0.001MF	10%	50V
C639	1-135-149-21	TANTAL. CHIP 2.2MF	20%	6.3V
C640	1-163-009-11	CERAMIC CHIP 0.001MF	10%	50V
C641	1-135-149-21	TANTAL. CHIP 2.2MF	20%	6.3V
C642	1-164-232-11	CERAMIC CHIP 0.01MF		50V
C643	1-135-181-21	TANTAL. CHIP 4.7MF	20%	6.3V
C644	1-162-951-11	CERAMIC CHIP 68PF	5%	50V
C645	1-164-232-11	CERAMIC CHIP 0.01MF		50V
C647	1-163-003-11	CERAMIC CHIP 330PF	10%	50V
C648	1-162-947-11	CERAMIC CHIP 33PF	5%	50V
C649	1-162-974-11	CERAMIC CHIP 0.01MF		50V
C650	1-162-974-11	CERAMIC CHIP 0.01MF		50V
C666	1-162-961-11	CERAMIC CHIP 330PF	10%	50V
C667	1-162-953-11	CERAMIC CHIP 100PF	5%	50V
C668	1-162-961-11	CERAMIC CHIP 330PF	10%	50V
C671	1-162-974-11	CERAMIC CHIP 0.01MF		50V
C672	1-162-963-11	CERAMIC CHIP 680PF	10%	50V
C676	1-164-232-11	CERAMIC CHIP 0.01MF		50V
C677	1-164-232-11	CERAMIC CHIP 0.01MF		50V
C678	1-164-232-11	CERAMIC CHIP 0.01MF		50V
C679	1-162-974-11	CERAMIC CHIP 0.01MF		50V
C680	1-162-953-11	CERAMIC CHIP 100PF	5%	50V
C682	1-124-778-00	ELECT CHIP 22MF	20%	6.3V
C683	1-124-778-00	ELECT CHIP 22MF	20%	6.3V
C684	1-126-603-11	ELECT CHIP 4.7MF	20%	35V
C685	1-163-093-00	CERAMIC CHIP 10PF	5%	50V
C686	1-163-101-00	CERAMIC CHIP 22PF	5%	50V
C687	1-135-170-21	TANTAL. CHIP 6.8MF	20%	4V
C688	1-126-603-11	ELECT CHIP 4.7MF	20%	35V
C690	1-135-181-21	TANTAL. CHIP 4.7MF	20%	6.3V
C691	1-163-091-00	CERAMIC CHIP 8PF	0.25PF	50V
C692	1-162-917-11	CERAMIC CHIP 15PF	5%	50V
C702	1-162-950-11	CERAMIC CHIP 56PF	5%	50V
C703	1-163-035-00	CERAMIC CHIP 0.047MF		50V
C704	1-163-035-00	CERAMIC CHIP 0.047MF		50V

When indicating parts by reference number, please include the board name.

Ref.No	Part No.	Description		Remark
C705	1-163-035-00	CERAMIC CHIP 0.047MF		50V
C706	1-163-035-00	CERAMIC CHIP 0.047MF		50V
C707	1-163-035-00	CERAMIC CHIP 0.047MF		50V
C708	1-135-091-00	TANTAL. CHIP 1MF	20%	16V
C709	1-162-964-11	CERAMIC CHIP 0.001MF	10%	50V
C710	1-162-962-11	CERAMIC CHIP 470PF	10%	50V
C711	1-163-035-00	CERAMIC CHIP 0.047MF		50V
C712	1-163-038-00	CERAMIC CHIP 0.1MF		25V
C713	1-163-110-00	CERAMIC CHIP 51PF	5%	50V
C714	1-162-921-11	CERAMIC CHIP 33PF	5%	50V
C719	1-162-949-11	CERAMIC CHIP 47PF	5%	50V
C720	1-162-942-11	CERAMIC CHIP 12PF	5%	50V
C722	1-135-158-21	TANTAL. CHIP 15MF	20%	4V
C725	1-135-091-00	TANTAL. CHIP 1MF	20%	16V
C727	1-163-095-00	CERAMIC CHIP 12PF	5%	50V
C729	1-163-035-00	CERAMIC CHIP 0.047MF		50V
C730	1-162-974-11	CERAMIC CHIP 0.01MF		50V
C734	1-163-038-00	CERAMIC CHIP 0.1MF		25V

CONNECTOR

CN401	*1-565-882-11	PIN, CONNECTOR (PC BOARD) 10P
CN402	*1-566-761-11	PIN, CONNECTOR (PC BOARD) 6P
CN404	*1-566-765-11	PIN, CONNECTOR (PC BOARD) 10P
CN405	*1-566-766-11	PIN, CONNECTOR (PC BOARD) 11P
CN406	*1-565-543-31	PIN, CONNECTOR (PC BOARD) 4P
CN407	*1-565-543-11	PIN, CONNECTOR (PC BOARD) 4P
CN408	*1-565-541-11	PIN, CONNECTOR (PC BOARD) 2P
CN409	*1-566-184-11	PIN, CONNECTOR (PC BOARD) 5P
CN410	*1-565-542-11	PIN, CONNECTOR (PC BOARD) 3P
CN413	*1-565-541-11	PIN, CONNECTOR (PC BOARD) 2P
CN414	*1-565-541-11	PIN, CONNECTOR (PC BOARD) 2P

TRIMMER

CV401	1-141-331-11	CAP, VAR, TRIMMER (CHIP) (30PF)
CV402	1-141-331-11	CAP, VAR, TRIMMER (CHIP) (30PF)
CV601	1-141-311-11	CAP, VAR, TRIMMER (CHIP) (20PF)

DIODE

D251	8-719-941-86	DIODE DAN202U
D252	8-719-941-86	DIODE DAN202U
D253	8-719-941-86	DIODE DAN202U
D254	8-719-941-09	DIODE DAP202U
D256	8-719-941-86	DIODE DAN202U
D257	8-719-941-86	DIODE DAN202U
D258	8-719-941-86	DIODE DAN202U
D259	8-719-941-86	DIODE DAN202U
D260	8-719-941-86	DIODE DAN202U
D261	8-719-941-86	DIODE DAN202U
D263	8-719-941-86	DIODE DAN202U
D264	8-719-941-86	DIODE DAN202U
D266	8-719-941-86	DIODE DAN202U
D267	8-719-106-43	DIODE RD9.1M-B1
D401	8-719-941-86	DIODE DAN202U

Ref.No	Part No.	Description	Remark
D402	8-719-941-86	DIODE DAN202U	
D404	8-719-941-86	DIODE DAN202U	
D405	8-719-941-86	DIODE DAN202U	
D407	8-719-941-86	DIODE DAN202U	
D409	8-719-941-86	DIODE DAN202U	
D411	8-713-949-48	DIODE 1T32-2	
D413	8-719-941-86	DIODE DAN202U	
D414	8-719-941-86	DIODE DAN202U	
D418	8-719-800-76	DIODE 1SS226	
D419	8-719-941-86	DIODE DAN202U	
D420	8-719-941-86	DIODE DAN202U	
D421	8-719-941-86	DIODE DAN202U	
D422	8-719-941-86	DIODE DAN202U	
D423	8-719-941-86	DIODE DAN202U	
D424	8-719-941-86	DIODE DAN202U	
D425	8-719-941-86	DIODE DAN202U	
D609	8-719-941-86	DIODE DAN202U	
D614	8-719-800-76	DIODE 1SS226	
D616	8-719-404-40	DIODE MA121	
D620	8-719-941-86	DIODE DAN202U	

DELAY LINE

DL601	1-415-612-11	DELAY LINE, GLASS
DL603	1-415-652-11	DC (LC)

FILTER

FL401	1-236-370-11	LPF, DEMOD (Y)
FL402	1-236-371-11	LPF, REC (Y)
FL601	1-567-306-11	FILTER, CERAMIC
FL602	1-236-372-11	BPF (PB.C)
FL603	1-409-386-11	C E TRAP
FL604	1-236-373-11	BPF (REC.C)

IC

IC251	8-759-012-00	IC MC10H116M
IC401	8-759-710-09	IC NJM2233AM
IC403	8-759-710-29	IC NJM2235M
IC404	8-759-710-29	IC NJM2235M
IC405	8-759-009-22	IC MC14094BF
IC406	8-759-970-80	IC MB673198U
IC407	8-759-148-77	IC UPD6451GT-615
IC408	8-759-710-12	IC NJM2230M
IC409	8-752-031-01	IC CXA1047M
IC410	8-752-032-97	IC CXA1230AR
IC601	8-752-924-94	IC CX22021
IC602	8-752-003-22	IC CX20032
IC604	8-759-914-56	IC CX23054
IC605	8-759-710-07	IC NJM2234M
IC606	8-759-710-07	IC NJM2234M
IC609	8-759-925-60	IC BA401

When indicating parts by reference number, please include the board name.

Ref.No	Part No.	Description	Remark
		COIL	
L251	1-410-393-11	INDUCTOR CHIP 100UH	
L252	1-412-067-21	INDUCTOR CHIP 330UH	
L253	1-410-656-11	INDUCTOR CHIP 150UH	
L255	1-410-380-31	INDUCTOR CHIP 8.2UH	
L401	1-412-058-11	INDUCTOR CHIP 10UH	
L402	1-408-797-11	INDUCTOR CHIP 470UH	
L403	1-410-390-11	INDUCTOR CHIP 56UH	
L404	1-410-375-11	INDUCTOR CHIP 3.3UH	
L405	1-410-384-31	INDUCTOR CHIP 18UH	
L406	1-410-390-11	INDUCTOR CHIP 56UH	
L407	1-410-378-11	INDUCTOR CHIP 5.6UH	
L408	1-412-058-11	INDUCTOR CHIP 10UH	
L411	1-410-386-11	INDUCTOR CHIP 27UH	
L412	1-410-380-31	INDUCTOR CHIP 8.2UH	
L413	1-412-058-11	INDUCTOR CHIP 10UH	
L414	1-412-058-11	INDUCTOR CHIP 10UH	
L416	1-410-393-11	INDUCTOR CHIP 100UH	
L417	1-410-393-11	INDUCTOR CHIP 100UH	
L419	1-410-377-31	INDUCTOR CHIP 4.7UH	
L421	1-410-382-31	INDUCTOR CHIP 12UH	
L601	1-410-657-21	INDUCTOR CHIP 180UH	
L602	1-410-387-11	INDUCTOR CHIP 33UH	
L603	1-410-393-11	INDUCTOR CHIP 100UH	
L604	1-410-656-11	INDUCTOR CHIP 150UH	
L605	1-410-655-31	INDUCTOR CHIP 120UH	
L606	1-410-393-11	INDUCTOR CHIP 100UH	
L607	1-412-058-11	INDUCTOR CHIP 10UH	
L609	1-410-391-11	INDUCTOR CHIP 68UH	
L610	1-410-371-21	INDUCTOR CHIP 1.5UH	
L611	1-410-371-21	INDUCTOR CHIP 1.5UH	
L612	1-412-058-11	INDUCTOR CHIP 10UH	
L613	1-412-058-11	INDUCTOR CHIP 10UH	
L614	1-408-779-31	INDUCTOR CHIP 15UH	
L616	1-410-393-11	INDUCTOR CHIP 100UH	
L617	1-410-386-11	INDUCTOR CHIP 27UH	
L620	1-412-058-11	INDUCTOR CHIP 10UH	
L621	1-410-388-21	INDUCTOR CHIP 39UH	
L624	1-410-376-21	INDUCTOR CHIP 3.9UH	
L625	1-410-383-31	INDUCTOR CHIP 15UH	
		VARIABLE COIL	
LV601	1-459-547-11	COIL, VARIABLE 15UH	
		TRANSISTOR	
Q251	8-729-117-32	TRANSISTOR 2SC4177	
Q252	8-729-402-42	TRANSISTOR UN5213	
Q253	8-729-402-42	TRANSISTOR UN5213	
Q254	8-729-402-42	TRANSISTOR UN5213	
Q256	8-729-402-42	TRANSISTOR UN5213	
Q257	8-729-117-32	TRANSISTOR 2SC4177	
Q258	8-729-402-42	TRANSISTOR UN5213	
Q259	8-729-140-63	TRANSISTOR 2SA1611	
Q261	8-729-117-32	TRANSISTOR 2SC4177	
Q262	8-729-402-42	TRANSISTOR UN5213	
Q263	8-729-140-63	TRANSISTOR 2SA1611	
Q264	8-729-117-32	TRANSISTOR 2SC4177	
Q265	8-729-403-07	TRANSISTOR XN1213	
Q266	8-729-403-35	TRANSISTOR UN5113	
Q267	8-729-402-42	TRANSISTOR UN5213	
Q268	8-729-402-42	TRANSISTOR UN5213	
Q269	8-729-402-42	TRANSISTOR UN5213	
Q270	8-729-403-35	TRANSISTOR UN5113	
Q271	8-729-117-32	TRANSISTOR 2SC4177	
Q272	8-729-117-32	TRANSISTOR 2SC4177	
Q273	8-729-402-42	TRANSISTOR UN5213	
Q274	8-729-402-42	TRANSISTOR UN5213	
Q275	8-729-162-44	TRANSISTOR 2SB624-BV4	
Q276	8-729-402-42	TRANSISTOR UN5213	
Q277	8-729-117-32	TRANSISTOR 2SC4177	
Q278	8-729-140-63	TRANSISTOR 2SA1611	
Q279	8-729-403-35	TRANSISTOR UN5113	
Q280	8-729-921-58	TRANSISTOR DTA144TU	
Q281	8-729-403-07	TRANSISTOR XN1213	
Q282	8-729-402-42	TRANSISTOR UN5213	
Q402	8-729-905-57	TRANSISTOR DTA124EU	
Q403	8-729-905-57	TRANSISTOR DTA124EU	
Q404	8-729-402-42	TRANSISTOR UN5213	
Q406	8-729-402-42	TRANSISTOR UN5213	
Q407	8-729-117-32	TRANSISTOR 2SC4177	
Q408	8-729-402-42	TRANSISTOR UN5213	
Q409	8-729-402-42	TRANSISTOR UN5213	
Q410	8-729-117-32	TRANSISTOR 2SC4177	
Q411	8-729-403-35	TRANSISTOR UN5113	
Q412	8-729-202-38	TRANSISTOR 2SC3326N	
Q415	8-729-402-42	TRANSISTOR UN5213	
Q416	8-729-402-42	TRANSISTOR UN5213	
Q417	8-729-402-42	TRANSISTOR UN5213	
Q418	8-729-402-42	TRANSISTOR UN5213	
Q419	8-729-402-42	TRANSISTOR UN5213	
Q420	8-729-403-35	TRANSISTOR UN5113	
Q422	8-729-140-63	TRANSISTOR 2SA1611	
Q424	8-729-202-38	TRANSISTOR 2SC3326N	
Q426	8-729-202-38	TRANSISTOR 2SC3326N	
Q427	8-729-117-32	TRANSISTOR 2SC4177	
Q428	8-729-420-20	TRANSISTOR XN4312	
Q429	8-729-117-32	TRANSISTOR 2SC4177	
Q430	8-729-216-22	TRANSISTOR 2SA1162	
Q431	8-729-402-42	TRANSISTOR UN5213	
Q432	8-729-402-42	TRANSISTOR UN5213	
Q433	8-729-403-35	TRANSISTOR UN5113	
Q434	8-729-117-32	TRANSISTOR 2SC4177	
Q437	8-729-905-09	TRANSISTOR DTA144WU	
Q438	8-729-117-32	TRANSISTOR 2SC4177	
Q439	8-729-117-32	TRANSISTOR 2SC4177	

When indicating parts by reference number, please include the board name.

Ref.No	Part No.	Description	Remark
Q440	8-729-117-32	TRANSISTOR 2SC4177	
Q441	8-729-117-32	TRANSISTOR 2SC4177	
Q442	8-729-117-32	TRANSISTOR 2SC4177	
Q443	8-729-905-45	TRANSISTOR DTA143EU	
Q444	8-729-140-63	TRANSISTOR 2SA1611	
Q445	8-729-117-32	TRANSISTOR 2SC4177	
Q446	8-729-117-32	TRANSISTOR 2SC4177	
Q447	8-729-117-32	TRANSISTOR 2SC4177	
Q448	8-729-162-44	TRANSISTOR 2SB624-BV4	
Q449	8-729-402-42	TRANSISTOR UN5213	
Q452	8-729-117-32	TRANSISTOR 2SC4177	
Q453	8-729-903-10	TRANSISTOR FMW1	
Q454	8-729-402-42	TRANSISTOR UN5213	
Q455	8-729-403-35	TRANSISTOR UN5113	
Q456	8-729-117-32	TRANSISTOR 2SC4177	
Q460	8-729-117-32	TRANSISTOR 2SC4177	
Q461	8-729-403-07	TRANSISTOR XN1213	
Q462	8-729-402-42	TRANSISTOR UN5213	
Q469	8-729-216-22	TRANSISTOR 2SA1162	
Q470	8-729-117-32	TRANSISTOR 2SC4177	
Q471	8-729-402-42	TRANSISTOR UN5213	
Q472	8-729-216-22	TRANSISTOR 2SA1162	
Q473	8-729-142-03	TRANSISTOR 2SC2223-F13	
Q474	8-729-102-07	TRANSISTOR 2SC2223-F13	
Q475	8-729-140-63	TRANSISTOR 2SA1611	
Q476	8-729-117-32	TRANSISTOR 2SC4177	
Q477	8-729-117-32	TRANSISTOR 2SC4177	
Q478	8-729-140-63	TRANSISTOR 2SA1611	
Q479	8-729-403-35	TRANSISTOR UN5113	
Q480	8-729-402-42	TRANSISTOR UN5213	
Q481	8-729-403-35	TRANSISTOR UN5113	
Q482	8-729-402-42	TRANSISTOR UN5213	
Q483	8-729-402-42	TRANSISTOR UN5213	
Q485	8-729-140-63	TRANSISTOR 2SA1611	
Q486	8-729-140-63	TRANSISTOR 2SA1611	
Q487	8-729-402-42	TRANSISTOR UN5213	
Q488	8-729-905-57	TRANSISTOR DTA124EU	
Q489	8-729-905-57	TRANSISTOR DTA124EU	
Q490	8-729-402-42	TRANSISTOR UN5213	
Q491	8-729-140-63	TRANSISTOR 2SA1611	
Q492	8-729-402-42	TRANSISTOR UN5213	
Q493	8-729-402-42	TRANSISTOR UN5213	
Q497	8-729-402-42	TRANSISTOR UN5213	
Q498	8-729-403-35	TRANSISTOR UN5113	
Q499	8-729-403-35	TRANSISTOR UN5113	
Q500	8-729-117-32	TRANSISTOR 2SC4177	
Q501	8-729-140-63	TRANSISTOR 2SA1611	
Q502	8-729-140-63	TRANSISTOR 2SA1611	
Q503	8-729-117-32	TRANSISTOR 2SC4177	
Q504	8-729-140-63	TRANSISTOR 2SA1611	
Q505	8-729-117-32	TRANSISTOR 2SC4177	
Q506	8-729-402-42	TRANSISTOR UN5213	
Q507	8-729-140-63	TRANSISTOR 2SA1611	
Q509	8-729-117-32	TRANSISTOR 2SC4177	
Q510	8-729-117-32	TRANSISTOR 2SC4177	
Q513	8-729-403-35	TRANSISTOR UN5113	
Q514	8-729-905-45	TRANSISTOR DTA143EU	
Q601	8-729-216-22	TRANSISTOR 2SA1162	
Q602	8-729-140-63	TRANSISTOR 2SA1611	
Q604	8-729-117-32	TRANSISTOR 2SC4177	
Q606	8-729-117-32	TRANSISTOR 2SC4177	
Q608	8-729-403-07	TRANSISTOR XN1213	
Q609	8-729-901-01	TRANSISTOR DTC144EK	
Q610	8-729-403-07	TRANSISTOR XN1213	
Q612	8-729-901-01	TRANSISTOR DTC144EK	
Q613	8-729-162-44	TRANSISTOR 2SB624-BV4	
Q614	8-729-403-35	TRANSISTOR UN5113	
Q615	8-729-905-45	TRANSISTOR DTA143EU	
Q616	8-729-140-63	TRANSISTOR 2SA1611	
Q617	8-729-117-32	TRANSISTOR 2SC4177	
Q618	8-729-117-32	TRANSISTOR 2SC4177	
Q630	8-729-901-01	TRANSISTOR DTC144EK	
Q631	8-729-271-22	TRANSISTOR 2SC2712-G	
Q632	8-729-271-22	TRANSISTOR 2SC2712-G	
Q633	8-729-901-06	TRANSISTOR DTA144EK	
Q634	8-729-403-07	TRANSISTOR XN1213	
Q636	8-729-403-06	TRANSISTOR XN1113	
Q638	8-729-901-06	TRANSISTOR DTA144EK	
Q639	8-729-901-01	TRANSISTOR DTC144EK	
Q640	8-729-901-06	TRANSISTOR DTA144EK	
Q642	8-729-901-01	TRANSISTOR DTC144EK	
Q645	8-729-117-32	TRANSISTOR 2SC4177	
Q646	8-729-903-10	TRANSISTOR FMW1	
Q647	8-729-216-22	TRANSISTOR 2SA1162	
Q649	8-729-117-32	TRANSISTOR 2SC4177	
Q650	8-729-271-22	TRANSISTOR 2SC2712-G	
Q651	8-729-901-06	TRANSISTOR DTA144EK	
Q652	8-729-271-22	TRANSISTOR 2SC2712-G	
Q654	8-729-117-32	TRANSISTOR 2SC4177	

RESISTOR

R052	1-216-810-11	METAL GLAZE	120	5%	1/16W
R053	1-216-864-11	METAL GLAZE	0	5%	1/16W
R054	1-216-813-11	METAL GLAZE	220	5%	1/16W
R055	1-216-821-11	METAL GLAZE	1K	5%	1/16W
R056	1-216-817-11	METAL GLAZE	470	5%	1/16W
R057	1-216-809-11	METAL GLAZE	100	5%	1/16W
R058	1-216-809-11	METAL GLAZE	100	5%	1/16W
R059	1-216-809-11	METAL GLAZE	100	5%	1/16W
R060	1-216-821-11	METAL GLAZE	1K	5%	1/16W
R061	1-216-825-11	METAL GLAZE	2.2K	5%	1/16W
R062	1-216-816-11	METAL GLAZE	390	5%	1/16W
R063	1-216-809-11	METAL GLAZE	100	5%	1/16W
R064	1-216-804-11	METAL GLAZE	39	5%	1/16W
R065	1-216-801-11	METAL GLAZE	22	5%	1/16W
R066	1-216-819-11	METAL GLAZE	680	5%	1/16W

When indicating parts by reference number, please include the board name.

Ref.No	Part No.	Description				Remark
R067	1-216-833-11	METAL GLAZE	10K	5%	1/16W	
R068	1-216-841-11	METAL GLAZE	47K	5%	1/16W	
R069	1-216-829-11	METAL GLAZE	4.7K	5%	1/16W	
R070	1-216-833-11	METAL GLAZE	10K	5%	1/16W	
R071	1-216-833-11	METAL GLAZE	10K	5%	1/16W	
R072	1-216-825-11	METAL GLAZE	2.2K	5%	1/16W	
R073	1-216-826-11	METAL GLAZE	2.7K	5%	1/16W	
R074	1-216-833-11	METAL GLAZE	10K	5%	1/16W	
R077	1-216-864-11	METAL GLAZE	0	5%	1/16W	
R101	1-216-835-11	METAL GLAZE	15K	5%	1/16W	
R103	1-216-864-11	METAL GLAZE	0	5%	1/16W	
R108	1-216-295-00	METAL GLAZE	0	5%	1/10W	
R110	1-216-295-00	METAL GLAZE	0	5%	1/10W	
R113	1-216-821-11	METAL GLAZE	1K	5%	1/16W	
R114	1-216-845-11	METAL GLAZE	100K	5%	1/16W	
R115	1-216-839-11	METAL GLAZE	33K	5%	1/16W	
R116	1-216-041-00	METAL GLAZE	470	5%	1/10W	
R117	1-216-073-00	METAL GLAZE	10K	5%	1/10W	
R118	1-216-073-00	METAL GLAZE	10K	5%	1/10W	
R122	1-216-835-11	METAL GLAZE	15K	5%	1/16W	
R123	1-216-841-11	METAL GLAZE	47K	5%	1/16W	
R124	1-216-826-11	METAL GLAZE	2.7K	5%	1/16W	
R125	1-216-833-11	METAL GLAZE	10K	5%	1/16W	
R126	1-216-833-11	METAL GLAZE	10K	5%	1/16W	
R127	1-216-833-11	METAL GLAZE	10K	5%	1/16W	
R129	1-216-864-11	METAL GLAZE	0	5%	1/16W	
R221	1-216-864-11	METAL GLAZE	0	5%	1/16W	
R251	1-216-821-11	METAL GLAZE	1K	5%	1/16W	
R252	1-216-821-11	METAL GLAZE	1K	5%	1/16W	
R253	1-216-821-11	METAL GLAZE	1K	5%	1/16W	
R258	1-216-864-11	METAL GLAZE	0	5%	1/16W	
R259	1-216-864-11	METAL GLAZE	0	5%	1/16W	
R260	1-216-833-11	METAL GLAZE	10K	5%	1/16W	
R261	1-216-833-11	METAL GLAZE	10K	5%	1/16W	
R262	1-216-833-11	METAL GLAZE	10K	5%	1/16W	
R263	1-216-864-11	METAL GLAZE	0	5%	1/16W	
R264	1-216-837-11	METAL GLAZE	22K	5%	1/16W	
R265	1-216-837-11	METAL GLAZE	22K	5%	1/16W	
R266	1-216-817-11	METAL GLAZE	470	5%	1/16W	
R267	1-216-845-11	METAL GLAZE	100K	5%	1/16W	
R268	1-216-833-11	METAL GLAZE	10K	5%	1/16W	
R269	1-216-833-11	METAL GLAZE	10K	5%	1/16W	
R270	1-216-831-11	METAL GLAZE	6.8K	5%	1/16W	
R271	1-216-821-11	METAL GLAZE	1K	5%	1/16W	
R272	1-216-818-11	METAL GLAZE	560	5%	1/16W	
R273	1-216-817-11	METAL GLAZE	470	5%	1/16W	
R274	1-216-808-11	METAL GLAZE	82	5%	1/16W	
R275	1-216-833-11	METAL GLAZE	10K	5%	1/16W	
R276	1-216-833-11	METAL GLAZE	10K	5%	1/16W	
R277	1-216-817-11	METAL GLAZE	470	5%	1/16W	
R278	1-216-817-11	METAL GLAZE	470	5%	1/16W	
R279	1-216-821-11	METAL GLAZE	1K	5%	1/16W	
R280	1-216-818-11	METAL GLAZE	560	5%	1/16W	

Ref.No	Part No.	Description				Remark
R282	1-216-817-11	METAL GLAZE	470	5%	1/16W	
R283	1-216-821-11	METAL GLAZE	1K	5%	1/16W	
R284	1-216-821-11	METAL GLAZE	1K	5%	1/16W	
R285	1-216-821-11	METAL GLAZE	1K	5%	1/16W	
R286	1-216-821-11	METAL GLAZE	1K	5%	1/16W	
R287	1-216-821-11	METAL GLAZE	1K	5%	1/16W	
R288	1-216-821-11	METAL GLAZE	1K	5%	1/16W	
R289	1-216-821-11	METAL GLAZE	1K	5%	1/16W	
R290	1-216-821-11	METAL GLAZE	1K	5%	1/16W	
R291	1-216-821-11	METAL GLAZE	1K	5%	1/16W	
R292	1-216-817-11	METAL GLAZE	470	5%	1/16W	
R293	1-216-817-11	METAL GLAZE	470	5%	1/16W	
R294	1-216-864-11	METAL GLAZE	0	5%	1/16W	
R295	1-216-845-11	METAL GLAZE	100K	5%	1/16W	
R296	1-216-841-11	METAL GLAZE	47K	5%	1/16W	
R297	1-216-845-11	METAL GLAZE	100K	5%	1/16W	
R298	1-216-841-11	METAL GLAZE	47K	5%	1/16W	
R299	1-216-841-11	METAL GLAZE	47K	5%	1/16W	
R301	1-216-821-11	METAL GLAZE	1K	5%	1/16W	
R302	1-216-821-11	METAL GLAZE	1K	5%	1/16W	
R303	1-216-821-11	METAL GLAZE	1K	5%	1/16W	
R304	1-216-821-11	METAL GLAZE	1K	5%	1/16W	
R305	1-216-821-11	METAL GLAZE	1K	5%	1/16W	
R306	1-216-828-11	METAL GLAZE	3.9K	5%	1/16W	
R307	1-216-825-11	METAL GLAZE	2.2K	5%	1/16W	
R308	1-216-809-11	METAL GLAZE	100	5%	1/16W	
R310	1-216-827-11	METAL GLAZE	3.3K	5%	1/16W	
R311	1-216-821-11	METAL GLAZE	1K	5%	1/16W	
R312	1-216-812-11	METAL GLAZE	180	5%	1/16W	
R313	1-216-813-11	METAL GLAZE	220	5%	1/16W	
R314	1-216-813-11	METAL GLAZE	220	5%	1/16W	
R316	1-216-821-11	METAL GLAZE	1K	5%	1/16W	
R317	1-216-809-11	METAL GLAZE	100	5%	1/16W	
R318	1-216-833-11	METAL GLAZE	10K	5%	1/16W	
R319	1-216-829-11	METAL GLAZE	4.7K	5%	1/16W	
R320	1-216-841-11	METAL GLAZE	47K	5%	1/16W	
R321	1-216-814-11	METAL GLAZE	270	5%	1/16W	
R322	1-216-828-11	METAL GLAZE	3.9K	5%	1/16W	
R323	1-216-857-11	METAL GLAZE	1M	5%	1/16W	
R324	1-216-841-11	METAL GLAZE	47K	5%	1/16W	
R326	1-216-839-11	METAL GLAZE	33K	5%	1/16W	
R327	1-216-835-11	METAL GLAZE	15K	5%	1/16W	
R328	1-216-818-11	METAL GLAZE	560	5%	1/16W	
R329	1-216-817-11	METAL GLAZE	470	5%	1/16W	
R330	1-216-817-11	METAL GLAZE	470	5%	1/16W	
R331	1-216-826-11	METAL GLAZE	2.7K	5%	1/16W	
R332	1-216-823-11	METAL GLAZE	1.5K	5%	1/16W	
R333	1-216-864-11	METAL GLAZE	0	5%	1/16W	
R334	1-216-809-11	METAL GLAZE	100	5%	1/16W	
R335	1-216-833-11	METAL GLAZE	10K	5%	1/16W	
R336	1-216-829-11	METAL GLAZE	4.7K	5%	1/16W	
R337	1-216-864-11	METAL GLAZE	0	5%	1/16W	
R338	1-216-848-11	METAL GLAZE	180K	5%	1/16W	

When indicating parts by reference number, please include the board name.

VI-66

Ref.No	Part No.	Description				Remark
R343	1-216-818-11	METAL GLAZE	560	5%	1/16W	
R357	1-216-817-11	METAL GLAZE	470	5%	1/16W	
R358	1-216-817-11	METAL GLAZE	470	5%	1/16W	
R359	1-216-837-11	METAL GLAZE	22K	5%	1/16W	
R360	1-216-821-11	METAL GLAZE	1K	5%	1/16W	
R361	1-216-039-00	METAL GLAZE	390	5%	1/10W	
R362	1-216-051-00	METAL GLAZE	1.2K	5%	1/10W	
R363	1-216-845-11	METAL GLAZE	100K	5%	1/16W	
R364	1-216-833-11	METAL GLAZE	10K	5%	1/16W	
R365	1-216-821-11	METAL GLAZE	1K	5%	1/16W	
R366	1-216-820-11	METAL GLAZE	820	5%	1/16W	
R367	1-216-816-11	METAL GLAZE	390	5%	1/16W	
R368	1-216-829-11	METAL GLAZE	4.7K	5%	1/16W	
R369	1-216-838-11	METAL GLAZE	27K	5%	1/16W	
R370	1-216-837-11	METAL GLAZE	22K	5%	1/16W	
R371	1-216-041-00	METAL GLAZE	470	5%	1/10W	
R372	1-216-043-00	METAL GLAZE	560	5%	1/10W	
R373	1-216-061-00	METAL GLAZE	3.3K	5%	1/10W	
R374	1-216-055-00	METAL GLAZE	1.8K	5%	1/10W	
R375	1-216-840-11	METAL GLAZE	39K	5%	1/16W	
R376	1-216-834-11	METAL GLAZE	12K	5%	1/16W	
R377	1-216-837-11	METAL GLAZE	22K	5%	1/16W	
R378	1-216-849-11	METAL GLAZE	220K	5%	1/16W	
R379	1-216-829-11	METAL GLAZE	4.7K	5%	1/16W	
R380	1-216-849-11	METAL GLAZE	220K	5%	1/16W	
R381	1-216-837-11	METAL GLAZE	22K	5%	1/16W	
R382	1-216-835-11	METAL GLAZE	15K	5%	1/16W	
R386	1-216-833-11	METAL GLAZE	10K	5%	1/16W	
R388	1-216-864-11	METAL GLAZE	0	5%	1/16W	
R390	1-216-809-11	METAL GLAZE	100	5%	1/16W	
R391	1-216-826-11	METAL GLAZE	2.7K	5%	1/16W	
R392	1-216-813-11	METAL GLAZE	220	5%	1/16W	
R393	1-216-819-11	METAL GLAZE	680	5%	1/16W	
R394	1-216-823-11	METAL GLAZE	1.5K	5%	1/16W	
R395	1-216-826-11	METAL GLAZE	2.7K	5%	1/16W	
R396	1-216-821-11	METAL GLAZE	1K	5%	1/16W	
R397	1-216-822-11	METAL GLAZE	1.2K	5%	1/16W	
R398	1-216-821-11	METAL GLAZE	1K	5%	1/16W	
R400	1-216-833-11	METAL GLAZE	10K	5%	1/16W	
R401	1-216-833-11	METAL GLAZE	10K	5%	1/16W	
R402	1-216-833-11	METAL GLAZE	10K	5%	1/16W	
R403	1-216-821-11	METAL GLAZE	1K	5%	1/16W	
R404	1-216-827-11	METAL GLAZE	3.3K	5%	1/16W	
R405	1-216-841-11	METAL GLAZE	47K	5%	1/16W	
R406	1-216-837-11	METAL GLAZE	22K	5%	1/16W	
R407	1-216-837-11	METAL GLAZE	22K	5%	1/16W	
R408	1-216-828-11	METAL GLAZE	3.9K	5%	1/16W	
R409	1-216-827-11	METAL GLAZE	3.3K	5%	1/16W	
R410	1-216-838-11	METAL GLAZE	27K	5%	1/16W	
R411	1-216-837-11	METAL GLAZE	22K	5%	1/16W	
R412	1-216-838-11	METAL GLAZE	27K	5%	1/16W	
R413	1-216-837-11	METAL GLAZE	22K	5%	1/16W	
R414	1-216-821-11	METAL GLAZE	1K	5%	1/16W	
R415	1-216-837-11	METAL GLAZE	22K	5%	1/16W	
R416	1-216-838-11	METAL GLAZE	27K	5%	1/16W	
R417	1-216-845-11	METAL GLAZE	100K	5%	1/16W	
R418	1-216-833-11	METAL GLAZE	10K	5%	1/16W	
R419	1-216-824-11	METAL GLAZE	1.8K	5%	1/16W	
R420	1-216-842-11	METAL GLAZE	56K	5%	1/16W	
R421	1-216-833-11	METAL GLAZE	10K	5%	1/16W	
R422	1-216-833-11	METAL GLAZE	10K	5%	1/16W	
R423	1-216-830-11	METAL GLAZE	5.6K	5%	1/16W	
R424	1-216-829-11	METAL GLAZE	4.7K	5%	1/16W	
R425	1-216-838-11	METAL GLAZE	27K	5%	1/16W	
R426	1-216-845-11	METAL GLAZE	100K	5%	1/16W	
R427	1-216-833-11	METAL GLAZE	10K	5%	1/16W	
R428	1-216-839-11	METAL GLAZE	33K	5%	1/16W	
R429	1-216-845-11	METAL GLAZE	100K	5%	1/16W	
R430	1-216-845-11	METAL GLAZE	100K	5%	1/16W	
R431	1-216-833-11	METAL GLAZE	10K	5%	1/16W	
R432	1-216-833-11	METAL GLAZE	10K	5%	1/16W	
R433	1-216-833-11	METAL GLAZE	10K	5%	1/16W	
R434	1-216-833-11	METAL GLAZE	10K	5%	1/16W	
R435	1-216-825-11	METAL GLAZE	2.2K	5%	1/16W	
R436	1-216-839-11	METAL GLAZE	33K	5%	1/16W	
R437	1-216-851-11	METAL GLAZE	330K	5%	1/16W	
R438	1-216-841-11	METAL GLAZE	47K	5%	1/16W	
R439	1-216-841-11	METAL GLAZE	47K	5%	1/16W	
R440	1-216-845-11	METAL GLAZE	100K	5%	1/16W	
R441	1-216-833-11	METAL GLAZE	10K	5%	1/16W	
R442	1-216-818-11	METAL GLAZE	560	5%	1/16W	
R444	1-216-821-11	METAL GLAZE	1K	5%	1/16W	
R445	1-216-821-11	METAL GLAZE	1K	5%	1/16W	
R446	1-216-821-11	METAL GLAZE	1K	5%	1/16W	
R447	1-216-077-00	METAL GLAZE	15K	5%	1/10W	
R448	1-216-069-00	METAL GLAZE	6.8K	5%	1/10W	
R449	1-216-834-11	METAL GLAZE	12K	5%	1/16W	
R450	1-216-832-11	METAL GLAZE	8.2K	5%	1/16W	
R451	1-216-829-11	METAL GLAZE	4.7K	5%	1/16W	
R452	1-216-061-00	METAL GLAZE	3.3K	5%	1/10W	
R453	1-216-063-00	METAL GLAZE	3.9K	5%	1/10W	
R454	1-216-039-00	METAL GLAZE	390	5%	1/10W	
R455	1-216-848-11	METAL GLAZE	180K	5%	1/16W	
R456	1-216-061-00	METAL GLAZE	3.3K	5%	1/10W	
R457	1-216-065-00	METAL GLAZE	4.7K	5%	1/10W	
R458	1-216-847-11	METAL GLAZE	150K	5%	1/16W	
R459	1-216-833-11	METAL GLAZE	10K	5%	1/16W	
R460	1-216-848-11	METAL GLAZE	180K	5%	1/16W	
R461	1-216-817-11	METAL GLAZE	470	5%	1/16W	
R462	1-216-832-11	METAL GLAZE	8.2K	5%	1/16W	
R463	1-216-837-11	METAL GLAZE	22K	5%	1/16W	
R464	1-216-826-11	METAL GLAZE	2.7K	5%	1/16W	
R465	1-216-826-11	METAL GLAZE	2.7K	5%	1/16W	
R466	1-216-847-11	METAL GLAZE	150K	5%	1/16W	
R468	1-216-857-11	METAL GLAZE	1M	5%	1/16W	
R469	1-216-851-11	METAL GLAZE	330K	5%	1/16W	

When indicating parts by reference number, please include the board name.

Ref.No	Part No.	Description				Remark
R471	1-216-833-11	METAL GLAZE	10K	5%	1/16W	
R472	1-216-825-11	METAL GLAZE	2.2K	5%	1/16W	
R473	1-216-061-00	METAL GLAZE	3.3K	5%	1/10W	
R475	1-216-051-00	METAL GLAZE	1.2K	5%	1/10W	
R476	1-216-023-00	METAL GLAZE	82	5%	1/10W	
R477	1-216-039-00	METAL GLAZE	390	5%	1/10W	
R478	1-216-039-00	METAL GLAZE	390	5%	1/10W	
R479	1-216-836-11	METAL GLAZE	18K	5%	1/16W	
R480	1-216-855-11	METAL GLAZE	680K	5%	1/16W	
R481	1-216-857-11	METAL GLAZE	1M	5%	1/16W	
R482	1-216-821-11	METAL GLAZE	1K	5%	1/16W	
R483	1-216-821-11	METAL GLAZE	1K	5%	1/16W	
R484	1-216-816-11	METAL GLAZE	390	5%	1/16W	
R485	1-216-834-11	METAL GLAZE	12K	5%	1/16W	
R486	1-216-837-11	METAL GLAZE	22K	5%	1/16W	
R487	1-216-827-11	METAL GLAZE	3.3K	5%	1/16W	
R488	1-216-837-11	METAL GLAZE	22K	5%	1/16W	
R489	1-216-841-11	METAL GLAZE	47K	5%	1/16W	
R490	1-216-842-11	METAL GLAZE	56K	5%	1/16W	
R491	1-216-829-11	METAL GLAZE	4.7K	5%	1/16W	
R492	1-216-843-11	METAL GLAZE	68K	5%	1/16W	
R493	1-216-845-11	METAL GLAZE	100K	5%	1/16W	
R494	1-216-821-11	METAL GLAZE	1K	5%	1/16W	
R495	1-216-837-11	METAL GLAZE	22K	5%	1/16W	
R496	1-216-837-11	METAL GLAZE	22K	5%	1/16W	
R498	1-216-821-11	METAL GLAZE	1K	5%	1/16W	
R499	1-216-839-11	METAL GLAZE	33K	5%	1/16W	
R500	1-216-827-11	METAL GLAZE	3.3K	5%	1/16W	
R501	1-216-824-11	METAL GLAZE	1.8K	5%	1/16W	
R502	1-216-835-11	METAL GLAZE	15K	5%	1/16W	
R503	1-216-837-11	METAL GLAZE	22K	5%	1/16W	
R504	1-216-834-11	METAL GLAZE	12K	5%	1/16W	
R505	1-216-853-11	METAL GLAZE	470K	5%	1/16W	
R506	1-216-846-11	METAL GLAZE	120K	5%	1/16W	
R507	1-216-847-11	METAL GLAZE	150K	5%	1/16W	
R510	1-216-833-11	METAL GLAZE	10K	5%	1/16W	
R512	1-216-825-11	METAL GLAZE	2.2K	5%	1/16W	
R513	1-216-821-11	METAL GLAZE	1K	5%	1/16W	
R514	1-216-821-11	METAL GLAZE	1K	5%	1/16W	
R515	1-216-825-11	METAL GLAZE	2.2K	5%	1/16W	
R516	1-216-832-11	METAL GLAZE	8.2K	5%	1/16W	
R517	1-216-834-11	METAL GLAZE	12K	5%	1/16W	
R518	1-216-821-11	METAL GLAZE	1K	5%	1/16W	
R519	1-216-821-11	METAL GLAZE	1K	5%	1/16W	
R520	1-216-864-11	METAL GLAZE	0	5%	1/16W	
R521	1-216-813-11	METAL GLAZE	220	5%	1/16W	
R522	1-216-813-11	METAL GLAZE	220	5%	1/16W	
R523	1-216-813-11	METAL GLAZE	220	5%	1/16W	
R525	1-216-818-11	METAL GLAZE	560	5%	1/16W	
R526	1-216-825-11	METAL GLAZE	2.2K	5%	1/16W	
R527	1-216-832-11	METAL GLAZE	8.2K	5%	1/16W	
R528	1-216-834-11	METAL GLAZE	12K	5%	1/16W	
R529	1-216-817-11	METAL GLAZE	470	5%	1/16W	

Ref.No	Part No.	Description				Remark
R530	1-216-832-11	METAL GLAZE	8.2K	5%	1/16W	
R531	1-216-834-11	METAL GLAZE	12K	5%	1/16W	
R532	1-216-825-11	METAL GLAZE	2.2K	5%	1/16W	
R533	1-216-833-11	METAL GLAZE	10K	5%	1/16W	
R534	1-216-833-11	METAL GLAZE	10K	5%	1/16W	
R535	1-216-816-11	METAL GLAZE	390	5%	1/16W	
R536	1-216-811-11	METAL GLAZE	150	5%	1/16W	
R537	1-216-819-11	METAL GLAZE	680	5%	1/16W	
R538	1-216-818-11	METAL GLAZE	560	5%	1/16W	
R539	1-216-813-11	METAL GLAZE	220	5%	1/16W	
R540	1-216-817-11	METAL GLAZE	470	5%	1/16W	
R541	1-216-817-11	METAL GLAZE	470	5%	1/16W	
R542	1-216-827-11	METAL GLAZE	3.3K	5%	1/16W	
R543	1-216-841-11	METAL GLAZE	47K	5%	1/16W	
R544	1-216-824-11	METAL GLAZE	1.8K	5%	1/16W	
R554	1-216-837-11	METAL GLAZE	22K	5%	1/16W	
R555	1-216-837-11	METAL GLAZE	22K	5%	1/16W	
R556	1-216-817-11	METAL GLAZE	470	5%	1/16W	
R557	1-216-821-11	METAL GLAZE	1K	5%	1/16W	
R558	1-216-817-11	METAL GLAZE	470	5%	1/16W	
R559	1-216-817-11	METAL GLAZE	470	5%	1/16W	
R560	1-216-864-11	METAL GLAZE	0	5%	1/16W	
R561	1-216-817-11	METAL GLAZE	470	5%	1/16W	
R562	1-216-819-11	METAL GLAZE	680	5%	1/16W	
R563	1-216-817-11	METAL GLAZE	470	5%	1/16W	
R564	1-216-829-11	METAL GLAZE	4.7K	5%	1/16W	
R565	1-216-837-11	METAL GLAZE	22K	5%	1/16W	
R566	1-216-838-11	METAL GLAZE	27K	5%	1/16W	
R567	1-216-830-11	METAL GLAZE	5.6K	5%	1/16W	
R568	1-216-829-11	METAL GLAZE	4.7K	5%	1/16W	
R569	1-216-821-11	METAL GLAZE	1K	5%	1/16W	
R570	1-216-821-11	METAL GLAZE	1K	5%	1/16W	
R571	1-216-821-11	METAL GLAZE	1K	5%	1/16W	
R572	1-216-820-11	METAL GLAZE	820	5%	1/16W	
R579	1-216-835-11	METAL GLAZE	15K	5%	1/16W	
R581	1-216-833-11	METAL GLAZE	10K	5%	1/16W	
R582	1-216-825-11	METAL GLAZE	2.2K	5%	1/16W	
R583	1-216-829-11	METAL GLAZE	4.7K	5%	1/16W	
R584	1-216-825-11	METAL GLAZE	2.2K	5%	1/16W	
R585	1-216-837-11	METAL GLAZE	22K	5%	1/16W	
R586	1-216-837-11	METAL GLAZE	22K	5%	1/16W	
R587	1-216-839-11	METAL GLAZE	33K	5%	1/16W	
R588	1-216-864-11	METAL GLAZE	0	5%	1/16W	
R590	1-216-864-11	METAL GLAZE	0	5%	1/16W	
R592	1-216-841-11	METAL GLAZE	47K	5%	1/16W	
R593	1-216-841-11	METAL GLAZE	47K	5%	1/16W	
R594	1-216-841-11	METAL GLAZE	47K	5%	1/16W	
R595	1-216-841-11	METAL GLAZE	47K	5%	1/16W	
R596	1-216-841-11	METAL GLAZE	47K	5%	1/16W	
R597	1-216-841-11	METAL GLAZE	47K	5%	1/16W	
R601	1-216-063-00	METAL GLAZE	3.9K	5%	1/10W	
R602	1-216-825-11	METAL GLAZE	2.2K	5%	1/16W	
R603	1-216-818-11	METAL GLAZE	560	5%	1/16W	

When indicating parts by reference number, please include the board name.

Ref.No	Part No.	Description				Remark
R604	1-216-829-11	METAL GLAZE	4.7K	5%	1/16W	
R606	1-216-829-11	METAL GLAZE	4.7K	5%	1/16W	
R607	1-216-833-11	METAL GLAZE	10K	5%	1/16W	
R608	1-216-833-11	METAL GLAZE	10K	5%	1/16W	
R609	1-216-817-11	METAL GLAZE	470	5%	1/16W	
R610	1-216-830-11	METAL GLAZE	5.6K	5%	1/16W	
R611	1-216-837-11	METAL GLAZE	22K	5%	1/16W	
R612	1-216-041-00	METAL GLAZE	470	5%	1/10W	
R613	1-216-833-11	METAL GLAZE	10K	5%	1/16W	
R614	1-216-826-11	METAL GLAZE	2.7K	5%	1/16W	
R615	1-216-822-11	METAL GLAZE	1.2K	5%	1/16W	
R616	1-216-828-11	METAL GLAZE	3.9K	5%	1/16W	
R617	1-216-826-11	METAL GLAZE	2.7K	5%	1/16W	
R618	1-216-841-11	METAL GLAZE	47K	5%	1/16W	
R619	1-216-841-11	METAL GLAZE	47K	5%	1/16W	
R620	1-216-833-11	METAL GLAZE	10K	5%	1/16W	
R621	1-216-828-11	METAL GLAZE	3.9K	5%	1/16W	
R622	1-216-097-00	METAL GLAZE	100K	5%	1/10W	
R623	1-216-837-11	METAL GLAZE	22K	5%	1/16W	
R624	1-216-829-11	METAL GLAZE	4.7K	5%	1/16W	
R625	1-216-823-11	METAL GLAZE	1.5K	5%	1/16W	
R626	1-216-827-11	METAL GLAZE	3.3K	5%	1/16W	
R627	1-216-864-11	METAL GLAZE	0	5%	1/16W	
R628	1-216-834-11	METAL GLAZE	12K	5%	1/16W	
R629	1-216-829-11	METAL GLAZE	4.7K	5%	1/16W	
R630	1-216-823-11	METAL GLAZE	1.5K	5%	1/16W	
R632	1-216-848-11	METAL GLAZE	180K	5%	1/16W	
R633	1-216-049-00	METAL GLAZE	1K	5%	1/10W	
R634	1-216-822-11	METAL GLAZE	1.2K	5%	1/16W	
R635	1-216-295-00	METAL GLAZE	0	5%	1/10W	
R637	1-216-841-11	METAL GLAZE	47K	5%	1/16W	
R638	1-216-039-00	METAL GLAZE	390	5%	1/10W	
R639	1-216-857-11	METAL GLAZE	1M	5%	1/16W	
R640	1-216-115-00	METAL GLAZE	560K	5%	1/10W	
R641	1-216-841-11	METAL GLAZE	47K	5%	1/16W	
R643	1-216-295-00	METAL GLAZE	0	5%	1/10W	
R644	1-216-833-11	METAL GLAZE	10K	5%	1/16W	
R645	1-216-295-00	METAL GLAZE	0	5%	1/10W	
R647	1-216-833-11	METAL GLAZE	10K	5%	1/16W	
R666	1-216-833-11	METAL GLAZE	10K	5%	1/16W	
R667	1-216-821-11	METAL GLAZE	1K	5%	1/16W	
R670	1-216-295-00	METAL GLAZE	0	5%	1/10W	
R671	1-216-295-00	METAL GLAZE	0	5%	1/10W	
R672	1-216-864-11	METAL GLAZE	0	5%	1/16W	
R673	1-216-829-11	METAL GLAZE	4.7K	5%	1/16W	
R675	1-216-818-11	METAL GLAZE	560	5%	1/16W	
R676	1-216-819-11	METAL GLAZE	680	5%	1/16W	
R677	1-216-831-11	METAL GLAZE	6.8K	5%	1/16W	
R678	1-216-831-11	METAL GLAZE	6.8K	5%	1/16W	
R679	1-216-055-00	METAL GLAZE	1.8K	5%	1/10W	
R680	1-216-840-11	METAL GLAZE	39K	5%	1/16W	
R681	1-216-840-11	METAL GLAZE	39K	5%	1/16W	
R682	1-216-055-00	METAL GLAZE	1.8K	5%	1/10W	

Ref.No	Part No.	Description				Remark
R686	1-216-833-11	METAL GLAZE	10K	5%	1/16W	
R688	1-216-833-11	METAL GLAZE	10K	5%	1/16W	
R691	1-216-809-11	METAL GLAZE	100	5%	1/16W	
R692	1-216-019-00	METAL GLAZE	56	5%	1/10W	
R693	1-216-029-00	METAL GLAZE	150	5%	1/10W	
R694	1-216-097-00	METAL GLAZE	100K	5%	1/10W	
R695	1-216-834-11	METAL GLAZE	12K	5%	1/16W	
R696	1-216-833-11	METAL GLAZE	10K	5%	1/16W	
R697	1-216-821-11	METAL GLAZE	1K	5%	1/16W	
R698	1-216-814-11	METAL GLAZE	270	5%	1/16W	
R699	1-216-035-00	METAL GLAZE	270	5%	1/10W	
R700	1-216-043-00	METAL GLAZE	560	5%	1/10W	
R701	1-216-043-00	METAL GLAZE	560	5%	1/10W	
R702	1-216-059-00	METAL GLAZE	2.7K	5%	1/10W	
R705	1-216-055-00	METAL GLAZE	1.8K	5%	1/10W	
R706	1-216-089-00	METAL GLAZE	47K	5%	1/10W	
R707	1-216-837-11	METAL GLAZE	22K	5%	1/16W	
R708	1-216-833-11	METAL GLAZE	10K	5%	1/16W	
R709	1-216-834-11	METAL GLAZE	12K	5%	1/16W	
R710	1-216-833-11	METAL GLAZE	10K	5%	1/16W	
R711	1-216-864-11	METAL GLAZE	0	5%	1/16W	
R712	1-216-826-11	METAL GLAZE	2.7K	5%	1/16W	
R713	1-216-815-11	METAL GLAZE	330	5%	1/16W	
R714	1-216-815-11	METAL GLAZE	330	5%	1/16W	
R715	1-216-051-00	METAL GLAZE	1.2K	5%	1/10W	
R716	1-216-051-00	METAL GLAZE	1.2K	5%	1/10W	
R717	1-216-041-00	METAL GLAZE	470	5%	1/10W	
R744	1-216-063-00	METAL GLAZE	3.9K	5%	1/10W	
R745	1-216-071-00	METAL GLAZE	8.2K	5%	1/10W	
R746	1-216-838-11	METAL GLAZE	27K	5%	1/16W	
R747	1-216-817-11	METAL GLAZE	470	5%	1/16W	
R748	1-216-837-11	METAL GLAZE	22K	5%	1/16W	
R749	1-216-815-11	METAL GLAZE	330	5%	1/16W	
R750	1-216-821-11	METAL GLAZE	1K	5%	1/16W	
R751	1-216-039-00	METAL GLAZE	390	5%	1/10W	
R752	1-216-821-11	METAL GLAZE	1K	5%	1/16W	
R753	1-216-041-00	METAL GLAZE	470	5%	1/10W	
R754	1-216-031-00	METAL GLAZE	180	5%	1/10W	
R755	1-216-825-11	METAL GLAZE	2.2K	5%	1/16W	
R756	1-216-822-11	METAL GLAZE	1.2K	5%	1/16W	
R757	1-216-843-11	METAL GLAZE	68K	5%	1/16W	
R758	1-216-826-11	METAL GLAZE	2.7K	5%	1/16W	
R759	1-216-823-11	METAL GLAZE	1.5K	5%	1/16W	
R760	1-216-824-11	METAL GLAZE	1.8K	5%	1/16W	
R761	1-216-833-11	METAL GLAZE	10K	5%	1/16W	
R762	1-216-821-11	METAL GLAZE	1K	5%	1/16W	
R763	1-216-041-00	METAL GLAZE	470	5%	1/10W	
R765	1-216-821-11	METAL GLAZE	1K	5%	1/16W	
R770	1-216-864-11	METAL GLAZE	0	5%	1/16W	
R771	1-216-821-11	METAL GLAZE	1K	5%	1/16W	
R772	1-216-821-11	METAL GLAZE	1K	5%	1/16W	
R774	1-216-864-11	METAL GLAZE	0	5%	1/16W	
R776	1-216-821-11	METAL GLAZE	1K	5%	1/16W	

When indicating parts by reference number, please include the board name.

Ref.No	Part No.	Description				Remark
R777	1-216-071-00	METAL GLAZE	8.2K	5%	1/10W	
R778	1-216-295-00	METAL GLAZE	0	5%	1/10W	
R780	1-216-864-11	METAL GLAZE	0	5%	1/16W	
R781	1-216-864-11	METAL GLAZE	0	5%	1/16W	
R782	1-216-295-00	METAL GLAZE	0	5%	1/10W	
R783	1-216-295-00	METAL GLAZE	0	5%	1/10W	
R787	1-216-051-00	METAL GLAZE	1.2K	5%	1/10W	
R789	1-216-819-11	METAL GLAZE	680	5%	1/16W	
R790	1-216-819-11	METAL GLAZE	680	5%	1/16W	
R791	1-216-049-00	METAL GLAZE	1K	5%	1/10W	
R795	1-216-053-00	METAL GLAZE	1.5K	5%	1/10W	
R796	1-216-832-11	METAL GLAZE	8.2K	5%	1/16W	
R797	1-216-049-00	METAL GLAZE	1K	5%	1/10W	
R798	1-216-051-00	METAL GLAZE	1.2K	5%	1/10W	
R799	1-216-837-11	METAL GLAZE	22K	5%	1/16W	

VARIABLE RESISTOR

RV401	1-230-867-11	RES, ADJ, METAL GLAZE 1K
RV404	1-230-868-11	RES, ADJ, METAL GLAZE 2.2K
RV405	1-230-867-11	RES, ADJ, METAL GLAZE 1K
RV406	1-230-868-11	RES, ADJ, METAL GLAZE 2.2K
RV407	1-230-870-11	RES, ADJ, METAL GLAZE 10K
RV408	1-230-870-11	RES, ADJ, METAL GLAZE 10K
RV409	1-230-870-11	RES, ADJ, METAL GLAZE 10K
RV410	1-230-869-11	RES, ADJ, METAL GLAZE 4.7K
RV416	1-230-870-11	RES, ADJ, METAL GLAZE 10K
RV417	1-230-874-11	RES, ADJ, METAL GLAZE 100K
RV601	1-230-871-11	RES, ADJ, METAL GLAZE 22K
RV602	1-230-871-11	RES, ADJ, METAL GLAZE 22K

TERMINAL PIN

TP401	*1-535-622-11	PIN, TERMINAL
TP402	*1-535-622-11	PIN, TERMINAL

BOARD

W403	1-629-777-11	FP-203 BOARD

CRYSTAL

X601	1-567-505-61	OSCILLATOR, CRYSTAL (3.58MHz)

****

	*A-7061-979-A	PC-35 BOARD, COMPLETE (Ref.No 6,000 Series)
		**********
	*3-742-708-01	COVER, LPF SHIELD
	*3-742-754-01	COVER (B), LPF SHIELD
	*3-742-760-01	PLATE (A), SHIELD, LPF
	*3-742-818-01	PLATE, SHIELD, PC

CAPACITOR

Ref.No	Part No.	Description				Remark
C301	1-163-038-00	CERAMIC CHIP	0.1MF			25V
C302	1-163-038-00	CERAMIC CHIP	0.1MF			25V
C303	1-163-038-00	CERAMIC CHIP	0.1MF			25V
C304	1-163-038-00	CERAMIC CHIP	0.1MF			25V
C311	1-124-967-11	ELECT	10MF	20%		10V
C312	1-126-100-11	ELECT	10MF	20%		6.3V
C313	1-164-005-11	CERAMIC CHIP	0.47MF			25V
C314	1-164-005-11	CERAMIC CHIP	0.47MF			25V
C315	1-163-809-11	CERAMIC CHIP	0.047MF	10%		25V
C316	1-163-038-00	CERAMIC CHIP	0.1MF			25V
C317	1-126-094-11	ELECT	4.7MF	20%		16V
C318	1-126-094-11	ELECT	4.7MF	20%		16V
C319	1-163-038-00	CERAMIC CHIP	0.1MF			25V
C320	1-124-566-11	ELECT	120MF	20%		6.3V
C321	1-163-989-11	CERAMIC CHIP	0.033MF	10%		25V
C322	1-163-038-00	CERAMIC CHIP	0.1MF			25V
C323	1-163-989-11	CERAMIC CHIP	0.033MF	10%		25V
C325	1-163-235-91	CERAMIC CHIP	22PF	5%		50V
C326	1-163-235-91	CERAMIC CHIP	22PF	5%		50V
C327	1-163-009-11	CERAMIC CHIP	0.001MF	10%		50V
C328	1-163-009-11	CERAMIC CHIP	0.001MF	10%		50V
C329	1-124-225-00	ELECT	100MF	20%		6.3V
C330	1-126-157-11	ELECT	10MF	20%		6.3V
C331	1-126-153-11	ELECT	22MF	20%		6.3V
C332	1-162-587-11	CERAMIC CHIP	0.039MF	10%		25V
C333	1-163-125-00	CERAMIC CHIP	220PF	5%		50V
C334	1-163-017-00	CERAMIC CHIP	0.0047MF	10%		50V
C335	1-163-088-00	CERAMIC CHIP	5PF	0.25PF		50V
C336	1-126-157-11	ELECT	10MF	20%		6.3V
C337	1-124-464-11	ELECT	0.22MF	20%		50V
C338	1-163-137-00	CERAMIC CHIP	680PF	5%		50V
C339	1-163-020-00	CERAMIC CHIP	0.0082MF	10%		50V
C341	1-126-153-11	ELECT	22MF	20%		6.3V
C342	1-124-257-00	ELECT	2.2MF	20%		35V
C343	1-124-225-00	ELECT	100MF	20%		6.3V
C345	1-126-157-11	ELECT	10MF	20%		6.3V
C346	1-126-153-11	ELECT	22MF	20%		6.3V
C347	1-162-587-11	CERAMIC CHIP	0.039MF	10%		25V
C348	1-163-125-00	CERAMIC CHIP	220PF	5%		50V
C349	1-163-088-00	CERAMIC CHIP	5PF	0.25PF		50V
C350	1-124-225-00	ELECT	100MF	20%		6.3V
C351	1-163-137-00	CERAMIC CHIP	680PF	5%		50V
C352	1-126-157-11	ELECT	10MF	20%		6.3V
C353	1-124-464-11	ELECT	0.22MF	20%		50V
C354	1-124-257-00	ELECT	2.2MF	20%		35V
C355	1-124-225-00	ELECT	100MF	20%		6.3V
C356	1-163-809-11	CERAMIC CHIP	0.047MF	10%		25V
C357	1-126-153-11	ELECT	22MF	20%		6.3V
C358	1-126-153-11	ELECT	22MF	20%		6.3V
C359	1-163-117-00	CERAMIC CHIP	100PF	5%		50V
C360	1-124-257-00	ELECT	2.2MF	20%		35V
C361	1-124-257-00	ELECT	2.2MF	20%		35V
C362	1-163-117-00	CERAMIC CHIP	100PF	5%		50V
C363	1-163-809-11	CERAMIC CHIP	0.047MF	10%		25V
C364	1-126-153-11	ELECT	22MF	20%		6.3V
C365	1-126-478-11	ELECT	33MF	20%		10V

When indicating parts by reference number, please include the board name.

PC-35

Ref.No	Part No.	Description			Remark
C366	1-126-478-11	ELECT	33MF	20%	10V
C367	1-126-153-11	ELECT	22MF	20%	6.3V
C368	1-126-157-11	ELECT	10MF	20%	6.3V
C369	1-164-232-11	CERAMIC CHIP	0.01MF		50V
C370	1-164-232-11	CERAMIC CHIP	0.01MF		50V
C371	1-126-094-11	ELECT	4.7MF	20%	16V
C372	1-126-094-11	ELECT	4.7MF	20%	16V
C373	1-163-009-11	CERAMIC CHIP	0.001MF	10%	50V
C374	1-163-009-11	CERAMIC CHIP	0.001MF	10%	50V
C375	1-124-967-11	ELECT	10MF	20%	10V
C376	1-124-967-11	ELECT	10MF	20%	10V
C377	1-126-094-11	ELECT	4.7MF	20%	16V
C378	1-126-162-11	ELECT	3.3MF	20%	25V
C379	1-124-229-00	ELECT	33MF	20%	10V
C380	1-124-229-00	ELECT	33MF	20%	10V
C381	1-126-157-11	ELECT	10MF	20%	16V
C382	1-126-157-11	ELECT	10MF	20%	16V
C383	1-126-094-11	ELECT	4.7MF	20%	16V
C384	1-126-094-11	ELECT	4.7MF	20%	16V
C385	1-126-153-11	ELECT	22MF	20%	6.3V
C386	1-164-232-11	CERAMIC CHIP	0.01MF		50V
C387	1-124-584-00	ELECT	100MF	20%	10V
C388	1-124-229-00	ELECT	33MF	20%	10V
C389	1-124-584-00	ELECT	100MF	20%	10V
C390	1-126-153-11	ELECT	22MF	20%	6.3V
C391	1-163-038-00	CERAMIC CHIP	0.1MF		25V
C392	1-163-038-00	CERAMIC CHIP	0.1MF		25V
C393	1-126-153-11	ELECT	22MF	20%	6.3V
C394	1-126-157-11	ELECT	10MF	20%	10V
C395	1-126-157-11	ELECT	10MF	20%	10V
C396	1-163-038-00	CERAMIC CHIP	0.1MF		25V
C397	1-163-038-00	CERAMIC CHIP	0.1MF		25V
C398	1-163-038-00	CERAMIC CHIP	0.1MF		25V
C399	1-163-038-00	CERAMIC CHIP	0.1MF		25V
C400	1-126-157-11	ELECT	10MF	20%	10V
C401	1-126-157-11	ELECT	10MF	20%	10V
C402	1-126-094-11	ELECT	4.7MF	20%	16V
C403	1-124-254-00	ELECT	0.68MF	20%	50V
C404	1-126-094-11	ELECT	4.7MF	20%	16V
C405	1-124-254-00	ELECT	0.68MF	20%	50V
C406	1-163-133-00	CERAMIC CHIP	470PF	5%	50V
C407	1-164-330-21	CERAMIC CHIP	0.22MF	10%	16V
C408	1-164-330-21	CERAMIC CHIP	0.22MF	10%	16V
C409	1-163-009-11	CERAMIC CHIP	0.001MF		50V
C410	1-124-257-00	ELECT	2.2MF	20%	35V
C411	1-164-232-11	CERAMIC CHIP	0.01MF		50V
C412	1-124-225-00	ELECT	100MF	20%	6.3V
C413	1-126-153-11	ELECT	22MF	20%	6.3V
C416	1-126-157-11	ELECT	10MF	20%	6.3V
C417	1-163-809-11	CERAMIC CHIP	0.047MF	10%	25V
C421	1-163-104-00	CERAMIC CHIP	30PF	5%	50V
C422	1-163-091-00	CERAMIC CHIP	8PF	0.25PF	50V
C424	1-164-004-11	CERAMIC CHIP	0.1MF	10%	25V

Ref.No	Part No.	Description			Remark
C425	1-163-809-11	CERAMIC CHIP	0.047MF	10%	25V
C426	1-124-499-11	ELECT	1MF	20%	35V
C427	1-164-004-11	CERAMIC CHIP	0.1MF	10%	25V
C428	1-164-232-11	CERAMIC CHIP	0.01MF		50V
C430	1-163-809-11	CERAMIC CHIP	0.047MF	10%	25V
C431	1-163-809-11	CERAMIC CHIP	0.047MF	10%	25V
C432	1-163-809-11	CERAMIC CHIP	0.047MF	10%	25V
C433	1-163-809-11	CERAMIC CHIP	0.047MF	10%	25V
C434	1-163-093-00	CERAMIC CHIP	10PF	5%	50V
C435	1-163-109-00	CERAMIC CHIP	47PF	5%	50V
C436	1-163-115-00	CERAMIC CHIP	82PF	5%	50V
C437	1-163-809-11	CERAMIC CHIP	0.047MF	10%	25V
C438	1-126-157-11	ELECT	10MF	20%	6.3V
C440	1-163-809-11	CERAMIC CHIP	0.047MF	10%	25V
C441	1-126-157-11	ELECT	10MF	20%	6.3V
C442	1-163-017-00	CERAMIC CHIP	0.0047MF	10%	50V
C443	1-163-809-11	CERAMIC CHIP	0.047MF	10%	25V
C444	1-126-157-11	ELECT	10MF	20%	6.3V
C445	1-126-157-11	ELECT	10MF	20%	6.3V
C446	1-163-809-11	CERAMIC CHIP	0.047MF	10%	25V
C447	1-163-011-11	CERAMIC CHIP	0.0015MF	10%	50V
C448	1-124-604-00	ELECT	330MF	20%	10V
C449	1-163-125-00	CERAMIC CHIP	220PF	5%	50V
C450	1-163-809-11	CERAMIC CHIP	0.047MF	10%	25V
C451	1-163-809-11	CERAMIC CHIP	0.047MF	10%	25V
C543	1-163-038-00	CERAMIC CHIP	0.1MF		25V
C545	1-124-584-00	ELECT	100MF	20%	10V
C546	1-163-009-11	CERAMIC CHIP	0.001MF	10%	50V
C547	1-163-017-00	CERAMIC CHIP	0.0047MF	10%	50V
C548	1-163-020-00	CERAMIC CHIP	0.0082MF	10%	50V
C549	1-164-232-11	CERAMIC CHIP	0.01MF		50V
C550	1-164-232-11	CERAMIC CHIP	0.01MF		50V
C600	1-126-160-11	ELECT	1MF	20%	50V
C601	1-126-157-11	ELECT	10MF	20%	6.3V
C602	1-124-584-00	ELECT	100MF	20%	10V
C603	1-126-157-11	ELECT	10MF	20%	6.3V
C604	1-126-157-11	ELECT	10MF	20%	6.3V
C605	1-164-161-11	CERAMIC CHIP	0.0022MF	10%	50V
C606	1-163-038-00	CERAMIC CHIP	0.1MF		25V
C607	1-124-584-00	ELECT	100MF	20%	10V
C608	1-126-157-11	ELECT	10MF	20%	6.3V
C609	1-126-100-11	ELECT	10MF	20%	6.3V
C610	1-164-161-11	CERAMIC CHIP	0.0022MF	10%	50V
C611	1-126-157-11	ELECT	10MF	20%	6.3V
C612	1-126-100-11	ELECT	10MF	20%	6.3V
C613	1-124-584-00	ELECT	100MF	20%	10V
C614	1-163-038-00	CERAMIC CHIP	0.1MF		25V
C615	1-163-125-00	CERAMIC CHIP	220PF	5%	50V
C616	1-163-117-00	CERAMIC CHIP	100PF	5%	50V
C617	1-163-117-00	CERAMIC CHIP	100PF	5%	50V
C618	1-126-160-11	ELECT	1MF	20%	50V
C619	1-163-125-00	CERAMIC CHIP	220PF	5%	50V
C620	1-163-038-00	CERAMIC CHIP	0.1MF		25V

When indicating parts by reference number, please include the board name.

Ref.No	Part No.	Description			Remark
C621	1-124-566-11	ELECT	120MF	20%	6.3V
C622	1-126-160-11	ELECT	1MF	20%	50V
C623	1-124-270-61	ELECT	0.47MF	20%	50V
C624	1-124-270-61	ELECT	0.47MF	20%	50V
C625	1-126-157-11	ELECT	10MF	20%	6.3V
C626	1-163-125-00	CERAMIC CHIP	220PF	5%	50V
C627	1-163-125-00	CERAMIC CHIP	220PF	5%	50V
C628	1-163-038-00	CERAMIC CHIP	0.1MF		25V
C629	1-126-153-11	ELECT	22MF	20%	6.3V
C630	1-124-967-11	ELECT	10MF	20%	10V
C631	1-126-100-11	ELECT	10MF	20%	6.3V
C632	1-126-100-11	ELECT	10MF	20%	6.3V
C635	1-163-009-11	CERAMIC CHIP	0.001MF	10%	50V
C636	1-163-009-11	CERAMIC CHIP	0.001MF	10%	50V
C637	1-126-100-11	ELECT	10MF	20%	6.3V
C638	1-126-157-11	ELECT	10MF	20%	6.3V
C639	1-126-157-11	ELECT	10MF	20%	6.3V
C640	1-163-038-00	CERAMIC CHIP	0.1MF		25V
C641	1-163-101-00	CERAMIC CHIP	22PF	5%	50V
C642	1-163-101-00	CERAMIC CHIP	22PF	5%	50V
C643	1-163-989-11	CERAMIC CHIP	0.033MF	10%	25V
C644	1-163-989-11	CERAMIC CHIP	0.033MF	10%	25V
C645	1-163-101-00	CERAMIC CHIP	22PF	5%	50V
C646	1-163-101-00	CERAMIC CHIP	22PF	5%	50V
C647	1-124-967-11	ELECT	10MF	20%	10V
C648	1-124-967-11	ELECT	10MF	20%	10V
C649	1-163-038-00	CERAMIC CHIP	0.1MF		25V
C650	1-163-038-00	CERAMIC CHIP	0.1MF		25V
C651	1-163-009-11	CERAMIC CHIP	0.001MF	10%	50V
C652	1-163-009-11	CERAMIC CHIP	0.001MF	10%	50V
C655	1-163-038-00	CERAMIC CHIP	0.1MF		25V
C656	1-163-038-00	CERAMIC CHIP	0.1MF		25V
C668	1-163-038-00	CERAMIC CHIP	0.1MF		25V
C670	1-163-038-00	CERAMIC CHIP	0.1MF		25V
C672	1-163-137-00	CERAMIC CHIP	680PF	5%	50V
C674	1-163-009-11	CERAMIC CHIP	0.001MF	10%	50V
C675	1-126-529-11	ELECT	0.47MF	20%	50V
C676	1-126-529-11	ELECT	0.47MF	20%	50V
C677	1-124-504-00	ELECT	330MF	20%	10V
C678	1-163-038-00	CERAMIC CHIP	0.1MF		25V
C679	1-124-566-11	ELECT	120MF	20%	6.3V
C680	1-124-566-11	ELECT	120MF	20%	6.3V
C681	1-163-038-00	CERAMIC CHIP	0.1MF		25V
C682	1-126-157-11	ELECT	10MF	20%	10V
C683	1-163-038-00	CERAMIC CHIP	0.1MF		25V
C684	1-124-967-11	ELECT	10MF	20%	10V
C685	1-124-967-11	ELECT	10MF	20%	10V
C686	1-124-225-00	ELECT	100MF	20%	6.3V
C687	1-124-225-00	ELECT	100MF	20%	6.3V
C689	1-163-038-00	CERAMIC CHIP	0.1MF		25V
C690	1-163-038-00	CERAMIC CHIP	0.1MF		25V
C691	1-163-038-00	CERAMIC CHIP	0.1MF		25V
C692	1-163-038-00	CERAMIC CHIP	0.1MF		25V

Ref.No	Part No.	Description			Remark
C693	1-163-038-00	CERAMIC CHIP	0.1MF		25V
C694	1-163-038-00	CERAMIC CHIP	0.1MF		25V
C695	1-163-038-00	CERAMIC CHIP	0.1MF		25V
C698	1-126-153-11	ELECT	22MF	20%	6.3V

CONNECTOR

CN301	*1-566-185-21	PIN, CONNECTOR (PC BOARD) 6P
CN302	*1-566-185-11	PIN, CONNECTOR (PC BOARD) 6P
CN303	*1-566-201-11	PIN, CONNECTOR (PC BOARD) 8P
CN305	*1-565-883-11	PIN, CONNECTOR (PC BOARD) 11P
CN306	*1-566-765-11	PIN, CONNECTOR (PC BOARD) 10P
CN307	*1-565-211-11	CONNECTOR, FPC (ZIF) 22P
CN308	*1-566-184-11	PIN, CONNECTOR (PC BOARD) 5P
CN309	*1-566-197-11	PIN, CONNECTOR (PC BOARD) 4P
CN310	*1-566-198-11	PIN, CONNECTOR (PC BOARD) 5P
CN311	*1-566-196-11	PIN, CONNECTOR (PC BOARD) 3P
CN312	*1-566-185-11	PIN, CONNECTOR (PC BOARD) 6P
CN313	1-565-880-11	PIN, CONNECTOR (PC BOARD) 8P
CN316	*1-566-761-11	PIN, CONNECTOR (PC BOARD) 6P
CN317	*1-566-765-11	PIN, CONNECTOR (PC BOARD) 10P

TRIMMER

CV422	1-141-311-11	CAP, VAR, TRIMMER (CHIP)

DIODE

D301	8-719-108-24	DIODE 1SS223
D315	8-719-108-24	DIODE 1SS223
D316	8-719-400-18	DIODE MA152WK
D317	8-719-400-18	DIODE MA152WK
D318	8-719-400-18	DIODE MA152WK
D319	8-719-400-18	DIODE MA152WK
D320	8-713-300-88	DIODE 1T33C-01
D322	8-719-108-24	DIODE 1SS223
D333	8-719-108-24	DIODE 1SS223
D334	8-719-108-24	DIODE 1SS223
D335	8-719-104-34	DIODE 1S2836
D336	8-719-108-24	DIODE 1SS223
D337	8-719-104-34	DIODE 1S2836
D338	8-719-104-34	DIODE 1S2836
D339	8-719-400-18	DIODE MA152WK
D341	8-719-108-24	DIODE 1SS223
D342	8-719-400-18	DIODE MA152WK
D353	8-719-108-24	DIODE 1SS223
D600	8-719-104-34	DIODE 1S2836
D601	8-719-108-24	DIODE 1SS223
D602	8-719-108-24	DIODE 1SS223
D603	8-719-104-34	DIODE 1S2836
D604	8-719-104-34	DIODE 1S2836
D605	8-719-108-24	DIODE 1SS223
D606	8-719-104-34	DIODE 1S2836
D607	8-719-104-34	DIODE 1S2836
D608	8-719-104-34	DIODE 1S2836
D610	8-719-108-24	DIODE 1SS223

When indicating parts by reference number, please include the board name.

PC-35

Ref.No	Part No.	Description	Remark
D611	8-719-104-34	DIODE 1S2836	
D612	8-719-108-24	DIODE 1SS223	
D613	8-719-108-24	DIODE 1SS223	
D614	8-719-800-76	DIODE 1SS226	
D615	8-719-800-76	DIODE 1SS226	
D616	8-719-108-24	DIODE 1SS223	
D617	8-719-108-24	DIODE 1SS223	
D618	8-719-800-76	DIODE 1SS226	
D619	8-719-108-24	DIODE 1SS223	
D620	8-719-940-45	DIODE DWA010	
D621	8-719-108-24	DIODE 1SS223	
D622	8-719-800-76	DIODE 1SS226	
D623	8-719-108-24	DIODE 1SS223	
D624	8-719-400-18	DIODE MA152WK	
D625	8-719-800-76	DIODE 1SS226	
D626	8-719-800-76	DIODE 1SS226	
		FILTER	
FL301	1-236-109-11	FILTER, LOW PASS	
FL302	1-236-109-11	FILTER, LOW PASS	
FL303	1-236-043-11	FILTER, LOW PASS	
FL304	1-236-043-11	FILTER, LOW PASS	
		IC	
IC301	8-759-111-56	IC UPC4572G2	
IC302	8-759-145-75	IC UPC1313HA	
IC303	8-759-603-27	IC M5201FP	
IC304	8-759-603-27	IC M5201FP	
IC305	8-759-009-07	IC MC14053BF	
IC306	8-759-111-56	IC UPC4572G2	
IC307	8-759-633-01	IC M5222FP	
IC308	8-759-603-27	IC M5201FP	
IC309	8-759-603-27	IC M5201FP	
IC310	8-759-603-27	IC M5201FP	
IC311	8-759-603-27	IC M5201FP	
IC312	8-759-111-56	IC UPC4572G2	
IC313	8-752-009-90	IC CX20099	
IC314	8-752-332-57	IC CXD1077M	
IC315	8-759-929-26	IC TL431CPS	
IC316	8-759-111-56	IC UPC4572G2	
IC317	8-752-017-60	IC CX20176	
IC318	8-759-981-82	IC RC3414M	
IC319	8-757-991-00	IC CX-7991	
IC320	8-759-979-96	IC MB8464A-15LLPF	
IC321	8-752-332-46	IC CXD1208Q	
IC322	8-759-990-94	IC MB606199	
IC323	8-759-111-56	IC UPC4572G2	
IC324	8-752-010-20	IC CX20102	
IC325	8-759-961-38	IC BA6138	
IC327	8-759-981-69	IC LM2904M	
IC328	8-759-009-51	IC MC14538BF	
IC329	8-759-009-07	IC MC14053BF	
IC330	8-759-981-69	IC LM2904M	

Ref.No	Part No.	Description		Remark
IC331	8-759-981-69	IC LM2904M		
IC332	8-759-603-27	IC M5201FP		
IC333	8-759-603-27	IC M5201FP		
		COIL		
L301	1-408-978-21	INDUCTOR	47UH	
L302	1-408-978-21	INDUCTOR	47UH	
L303	1-408-978-21	INDUCTOR	47UH	
L305	1-410-144-11	INDUCTOR	15UH	
L306	1-408-978-21	INDUCTOR	47UH	
L307	1-410-389-31	INDUCTOR CHIP	47UH	
L308	1-410-658-31	INDUCTOR CHIP	220UH	
L309	1-408-978-21	INDUCTOR	47UH	
L310	1-408-978-21	INDUCTOR	47UH	
L311	1-408-970-21	INDUCTOR	10UH	
L315	1-408-970-21	INDUCTOR	10UH	
L600	1-410-144-11	INDUCTOR	15UH	
L601	1-408-982-11	INDUCTOR	100UH	
L602	1-408-970-21	INDUCTOR	10UH	
		TRANSISTOR		
Q307	8-729-902-93	TRANSISTOR FMG4		
Q310	8-729-100-66	TRANSISTOR 2SC1623		
Q311	8-729-100-66	TRANSISTOR 2SC1623		
Q312	8-729-901-01	TRANSISTOR DTC144EK		
Q313	8-729-901-06	TRANSISTOR DTA144EK		
Q314	8-729-216-22	TRANSISTOR 2SA1162		
Q316	8-729-901-06	TRANSISTOR DTA144EK		
Q319	8-729-901-06	TRANSISTOR DTA144EK		
Q323	8-729-901-06	TRANSISTOR DTA144EK		
Q324	8-729-100-66	TRANSISTOR 2SC1623		
Q325	8-729-100-66	TRANSISTOR 2SC1623		
Q326	8-729-100-66	TRANSISTOR 2SC1623		
Q327	8-729-100-66	TRANSISTOR 2SC1623		
Q330	8-729-901-01	TRANSISTOR DTC144EK		
Q331	8-729-901-06	TRANSISTOR DTA144EK		
Q332	8-729-900-53	TRANSISTOR DTC114EK		
Q333	8-729-901-01	TRANSISTOR DTC144EK		
Q334	8-729-100-66	TRANSISTOR 2SC1623		
Q335	8-729-216-22	TRANSISTOR 2SA1162		
Q336	8-729-901-01	TRANSISTOR DTC144EK		
Q337	8-729-100-66	TRANSISTOR 2SC1623		
Q338	8-729-100-66	TRANSISTOR 2SC1623		
Q339	8-729-100-66	TRANSISTOR 2SC1623		
Q340	8-729-100-66	TRANSISTOR 2SC1623		
Q341	8-729-100-66	TRANSISTOR 2SC1623		
Q342	8-729-100-66	TRANSISTOR 2SC1623		
Q345	8-729-902-90	TRANSISTOR FMA4		
Q347	8-729-901-06	TRANSISTOR DTA144EK		
Q348	8-729-901-01	TRANSISTOR DTC144EK		
Q349	8-729-904-20	TRANSISTOR FMA2		
Q350	8-729-901-06	TRANSISTOR DTA144EK		
Q351	8-729-901-01	TRANSISTOR DTC144EK		

When indicating parts by reference number, please include the board name.

Ref.No	Part No.	Description	Remark
Q352	8-729-901-01	TRANSISTOR DTC144EK	
Q600	8-729-901-01	TRANSISTOR DTC144EK	
Q601	8-729-904-09	TRANSISTOR FMG2	
Q602	8-729-904-09	TRANSISTOR FMG2	
Q603	8-729-904-09	TRANSISTOR FMG2	
Q604	8-729-901-03	TRANSISTOR DTC144WK	
Q605	8-729-901-01	TRANSISTOR DTC144EK	
Q606	8-729-100-66	TRANSISTOR 2SC1623	
Q607	8-729-100-66	TRANSISTOR 2SC1623	
Q610	8-729-902-99	TRANSISTOR DTC114TK	
Q611	8-729-902-99	TRANSISTOR DTC114TK	
Q612	8-729-100-66	TRANSISTOR 2SC1623	
Q613	8-729-901-06	TRANSISTOR DTA144EK	
Q614	8-729-901-06	TRANSISTOR DTA144EK	
Q615	8-729-100-66	TRANSISTOR 2SC1623	
Q616	8-729-900-99	TRANSISTOR DTA144WK	
Q617	8-729-900-99	TRANSISTOR DTA144WK	
Q618	8-729-100-66	TRANSISTOR 2SC1623	
Q619	8-729-901-01	TRANSISTOR DTC144EK	
Q620	8-729-901-01	TRANSISTOR DTC144EK	
Q623	8-729-901-01	TRANSISTOR DTC144EK	
Q624	8-729-900-51	TRANSISTOR DTA114TK	

RESISTOR

Ref.No	Part No.	Description				Remark
R301	1-216-097-00	METAL GLAZE	100K	5%	1/10W	
R302	1-216-097-00	METAL GLAZE	100K	5%	1/10W	
R303	1-216-097-00	METAL GLAZE	100K	5%	1/10W	
R304	1-216-097-00	METAL GLAZE	100K	5%	1/10W	
R305	1-216-089-00	METAL GLAZE	47K	5%	1/10W	
R306	1-216-097-00	METAL GLAZE	100K	5%	1/10W	
R307	1-216-097-00	METAL GLAZE	100K	5%	1/10W	
R308	1-216-097-00	METAL GLAZE	100K	5%	1/10W	
R309	1-216-097-00	METAL GLAZE	100K	5%	1/10W	
R310	1-216-097-00	METAL GLAZE	100K	5%	1/10W	
R311	1-216-097-00	METAL GLAZE	100K	5%	1/10W	
R312	1-216-097-00	METAL GLAZE	100K	5%	1/10W	
R313	1-216-097-00	METAL GLAZE	100K	5%	1/10W	
R314	1-216-097-00	METAL GLAZE	100K	5%	1/10W	
R315	1-216-097-00	METAL GLAZE	100K	5%	1/10W	
R316	1-216-097-00	METAL GLAZE	100K	5%	1/10W	
R318	1-216-097-00	METAL GLAZE	100K	5%	1/10W	
R319	1-216-097-00	METAL GLAZE	100K	5%	1/10W	
R322	1-216-097-00	METAL GLAZE	100K	5%	1/10W	
R323	1-216-097-00	METAL GLAZE	100K	5%	1/10W	
R324	1-216-073-00	METAL GLAZE	10K	5%	1/10W	
R325	1-216-073-00	METAL GLAZE	10K	5%	1/10W	
R326	1-216-049-00	METAL GLAZE	1K	5%	1/10W	
R327	1-216-097-00	METAL GLAZE	100K	5%	1/10W	
R328	1-216-097-00	METAL GLAZE	100K	5%	1/10W	
R329	1-216-073-00	METAL GLAZE	10K	5%	1/10W	
R330	1-216-097-00	METAL GLAZE	100K	5%	1/10W	
R333	1-216-097-00	METAL GLAZE	100K	5%	1/10W	
R334	1-216-073-00	METAL GLAZE	10K	5%	1/10W	
R336	1-216-097-00	METAL GLAZE	100K	5%	1/10W	
R337	1-216-073-00	METAL GLAZE	10K	5%	1/10W	
R338	1-216-025-00	METAL GLAZE	100	5%	1/10W	
R339	1-216-067-00	METAL GLAZE	5.6K	5%	1/10W	
R340	1-216-067-00	METAL GLAZE	5.6K	5%	1/10W	
R342	1-216-027-00	METAL GLAZE	120	5%	1/10W	
R344	1-216-097-00	METAL GLAZE	100K	5%	1/10W	
R345	1-216-097-00	METAL GLAZE	100K	5%	1/10W	
R346	1-216-097-00	METAL GLAZE	100K	5%	1/10W	
R347	1-216-295-00	METAL GLAZE	0	5%	1/10W	
R353	1-216-295-00	METAL GLAZE	0	5%	1/10W	
R359	1-216-061-00	METAL GLAZE	3.3K	5%	1/10W	
R360	1-216-061-00	METAL GLAZE	3.3K	5%	1/10W	
R361	1-216-075-00	METAL GLAZE	12K	5%	1/10W	
R362	1-216-075-00	METAL GLAZE	12K	5%	1/10W	
R363	1-216-049-00	METAL GLAZE	1K	5%	1/10W	
R364	1-216-049-00	METAL GLAZE	1K	5%	1/10W	
R365	1-216-039-00	METAL GLAZE	390	5%	1/10W	
R366	1-216-055-00	METAL GLAZE	1.8K	5%	1/10W	
R367	1-216-057-00	METAL GLAZE	2.2K	5%	1/10W	
R368	1-216-073-00	METAL GLAZE	10K	5%	1/10W	
R369	1-216-073-00	METAL GLAZE	10K	5%	1/10W	
R370	1-216-059-00	METAL GLAZE	2.7K	5%	1/10W	
R371	1-216-045-00	METAL GLAZE	680	5%	1/10W	
R372	1-216-057-00	METAL GLAZE	2.2K	5%	1/10W	
R373	1-216-063-00	METAL GLAZE	3.9K	5%	1/10W	
R374	1-216-017-00	METAL GLAZE	47	5%	1/10W	
R375	1-216-075-00	METAL GLAZE	12K	5%	1/10W	
R376	1-216-061-00	METAL GLAZE	3.3K	5%	1/10W	
R377	1-216-059-00	METAL GLAZE	2.7K	5%	1/10W	
R378	1-216-061-00	METAL GLAZE	3.3K	5%	1/10W	
R385	1-216-073-00	METAL GLAZE	10K	5%	1/10W	
R386	1-216-039-00	METAL GLAZE	390	5%	1/10W	
R387	1-216-055-00	METAL GLAZE	1.8K	5%	1/10W	
R388	1-216-057-00	METAL GLAZE	2.2K	5%	1/10W	
R389	1-216-073-00	METAL GLAZE	10K	5%	1/10W	
R390	1-216-059-00	METAL GLAZE	2.7K	5%	1/10W	
R391	1-216-057-00	METAL GLAZE	2.2K	5%	1/10W	
R393	1-216-017-00	METAL GLAZE	47	5%	1/10W	
R394	1-216-063-00	METAL GLAZE	3.9K	5%	1/10W	
R395	1-216-075-00	METAL GLAZE	12K	5%	1/10W	
R396	1-216-065-00	METAL GLAZE	4.7K	5%	1/10W	
R397	1-216-061-00	METAL GLAZE	3.3K	5%	1/10W	
R398	1-216-061-00	METAL GLAZE	3.3K	5%	1/10W	
R399	1-216-059-00	METAL GLAZE	2.7K	5%	1/10W	
R400	1-216-748-11	METAL GLAZE	39K	5%	1/10W	
R401	1-216-077-00	METAL GLAZE	15K	5%	1/10W	
R402	1-216-057-00	METAL GLAZE	2.2K	5%	1/10W	
R403	1-216-053-00	METAL GLAZE	1.5K	5%	1/10W	
R404	1-216-077-00	METAL GLAZE	15K	5%	1/10W	
R405	1-216-748-11	METAL GLAZE	39K	5%	1/10W	
R406	1-216-053-00	METAL GLAZE	1.5K	5%	1/10W	

When indicating parts by reference number, please include the board name.

PC-35

Ref.No	Part No.	Description				Remark
R407	1-216-057-00	METAL GLAZE	2.2K	5%	1/10W	
R408	1-216-119-00	METAL GLAZE	820K	5%	1/10W	
R409	1-216-700-11	METAL GLAZE	470K	1%	1/10W	
R410	1-216-039-00	METAL GLAZE	390	5%	1/10W	
R411	1-216-049-00	METAL GLAZE	1K	5%	1/10W	
R412	1-216-653-11	METAL CHIP	1.2K	0.50%	1/10W	
R413	1-216-022-00	METAL GLAZE	75	5%	1/10W	
R414	1-216-661-11	METAL CHIP	2.7K	0.50%	1/10W	
R415	1-216-045-00	METAL GLAZE	680	5%	1/10W	
R418	1-216-045-00	METAL GLAZE	680	5%	1/10W	
R419	1-216-029-00	METAL GLAZE	150	5%	1/10W	
R420	1-216-071-00	METAL GLAZE	8.2K	5%	1/10W	
R421	1-216-071-00	METAL GLAZE	8.2K	5%	1/10W	
R422	1-216-073-00	METAL GLAZE	10K	5%	1/10W	
R423	1-216-061-00	METAL GLAZE	3.3K	5%	1/10W	
R424	1-216-049-00	METAL GLAZE	1K	5%	1/10W	
R425	1-216-089-00	METAL GLAZE	47K	5%	1/10W	
R426	1-216-073-00	METAL GLAZE	10K	5%	1/10W	
R427	1-216-073-00	METAL GLAZE	10K	5%	1/10W	
R428	1-216-061-00	METAL GLAZE	3.3K	5%	1/10W	
R429	1-216-049-00	METAL GLAZE	1K	5%	1/10W	
R430	1-216-089-00	METAL GLAZE	47K	5%	1/10W	
R431	1-216-073-00	METAL GLAZE	10K	5%	1/10W	
R432	1-216-073-00	METAL GLAZE	10K	5%	1/10W	
R433	1-216-073-00	METAL GLAZE	10K	5%	1/10W	
R434	1-216-085-00	METAL GLAZE	33K	5%	1/10W	
R435	1-216-085-00	METAL GLAZE	33K	5%	1/10W	
R436	1-216-019-00	METAL GLAZE	56	5%	1/10W	
R437	1-216-019-00	METAL GLAZE	56	5%	1/10W	
R438	1-216-061-00	METAL GLAZE	3.3K	5%	1/10W	
R439	1-216-061-00	METAL GLAZE	3.3K	5%	1/10W	
R440	1-216-065-00	METAL GLAZE	4.7K	5%	1/10W	
R441	1-216-089-00	METAL GLAZE	47K	5%	1/10W	
R442	1-216-049-00	METAL GLAZE	1K	5%	1/10W	
R443	1-216-073-00	METAL GLAZE	10K	5%	1/10W	
R444	1-216-049-00	METAL GLAZE	1K	5%	1/10W	
R445	1-216-073-00	METAL GLAZE	10K	5%	1/10W	
R446	1-216-073-00	METAL GLAZE	10K	5%	1/10W	
R447	1-216-073-00	METAL GLAZE	10K	5%	1/10W	
R448	1-216-073-00	METAL GLAZE	10K	5%	1/10W	
R449	1-216-065-00	METAL GLAZE	4.7K	5%	1/10W	
R450	1-216-035-00	METAL GLAZE	270	5%	1/10W	
R451	1-216-073-00	METAL GLAZE	10K	5%	1/10W	
R452	1-216-073-00	METAL GLAZE	10K	5%	1/10W	
R453	1-216-073-00	METAL GLAZE	10K	5%	1/10W	
R454	1-216-073-00	METAL GLAZE	10K	5%	1/10W	
R455	1-216-089-00	METAL GLAZE	47K	5%	1/10W	
R456	1-216-113-00	METAL GLAZE	470K	5%	1/10W	
R457	1-216-113-00	METAL GLAZE	470K	5%	1/10W	
R458	1-216-057-00	METAL GLAZE	2.2K	5%	1/10W	
R459	1-216-069-00	METAL GLAZE	6.8K	5%	1/10W	
R460	1-216-079-00	METAL GLAZE	18K	5%	1/10W	
R461	1-216-051-00	METAL GLAZE	1.2K	5%	1/10W	

Ref.No	Part No.	Description				Remark
R462	1-216-051-00	METAL GLAZE	1.2K	5%	1/10W	
R463	1-216-079-00	METAL GLAZE	18K	5%	1/10W	
R464	1-216-069-00	METAL GLAZE	6.8K	5%	1/10W	
R465	1-216-057-00	METAL GLAZE	2.2K	5%	1/10W	
R466	1-216-025-00	METAL GLAZE	100	5%	1/10W	
R467	1-216-061-00	METAL GLAZE	3.3K	5%	1/10W	
R468	1-216-089-00	METAL GLAZE	47K	5%	1/10W	
R469	1-216-067-00	METAL GLAZE	5.6K	5%	1/10W	
R470	1-216-069-00	METAL GLAZE	6.8K	5%	1/10W	
R471	1-216-091-00	METAL GLAZE	56K	5%	1/10W	
R472	1-216-051-00	METAL GLAZE	1.2K	5%	1/10W	
R473	1-216-103-00	METAL GLAZE	180K	5%	1/10W	
R474	1-216-093-00	METAL GLAZE	68K	5%	1/10W	
R475	1-216-089-00	METAL GLAZE	47K	5%	1/10W	
R476	1-216-085-00	METAL GLAZE	33K	5%	1/10W	
R477	1-216-085-00	METAL GLAZE	33K	5%	1/10W	
R478	1-216-085-00	METAL GLAZE	33K	5%	1/10W	
R479	1-216-085-00	METAL GLAZE	33K	5%	1/10W	
R482	1-216-069-00	METAL GLAZE	6.8K	5%	1/10W	
R483	1-216-061-00	METAL GLAZE	3.3K	5%	1/10W	
R485	1-216-097-00	METAL GLAZE	100K	5%	1/10W	
R486	1-216-097-00	METAL GLAZE	100K	5%	1/10W	
R489	1-216-073-00	METAL GLAZE	10K	5%	1/10W	
R490	1-216-085-00	METAL GLAZE	33K	5%	1/10W	
R493	1-216-097-00	METAL GLAZE	100K	5%	1/10W	
R494	1-216-099-00	METAL GLAZE	120K	5%	1/10W	
R499	1-216-295-00	METAL GLAZE	0	5%	1/10W	
R504	1-216-045-00	METAL GLAZE	680	5%	1/10W	
R505	1-216-053-00	METAL GLAZE	1.5K	5%	1/10W	
R506	1-216-047-00	METAL GLAZE	820	5%	1/10W	
R507	1-216-073-00	METAL GLAZE	10K	5%	1/10W	
R508	1-216-073-00	METAL GLAZE	10K	5%	1/10W	
R509	1-216-025-00	METAL GLAZE	100	5%	1/10W	
R510	1-216-045-00	METAL GLAZE	680	5%	1/10W	
R511	1-216-045-00	METAL GLAZE	680	5%	1/10W	
R512	1-216-081-00	METAL GLAZE	22K	5%	1/10W	
R513	1-216-073-00	METAL GLAZE	10K	5%	1/10W	
R514	1-216-053-00	METAL GLAZE	1.5K	5%	1/10W	
R515	1-216-045-00	METAL GLAZE	680	5%	1/10W	
R516	1-216-049-00	METAL GLAZE	1K	5%	1/10W	
R517	1-216-045-00	METAL GLAZE	680	5%	1/10W	
R518	1-216-051-00	METAL GLAZE	1.2K	5%	1/10W	
R519	1-216-051-00	METAL GLAZE	1.2K	5%	1/10W	
R520	1-216-071-00	METAL GLAZE	8.2K	5%	1/10W	
R522	1-216-049-00	METAL GLAZE	1K	5%	1/10W	
R523	1-216-045-00	METAL GLAZE	680	5%	1/10W	
R524	1-216-061-00	METAL GLAZE	3.3K	5%	1/10W	
R525	1-216-045-00	METAL GLAZE	680	5%	1/10W	
R526	1-216-085-00	METAL GLAZE	33K	5%	1/10W	
R528	1-216-049-00	METAL GLAZE	1K	5%	1/10W	
R534	1-216-645-11	METAL CHIP	560	0.50%	1/10W	
R536	1-216-077-00	METAL GLAZE	15K	5%	1/10W	
R537	1-216-091-00	METAL GLAZE	56K	5%	1/10W	

When indicating parts by reference number, please include the board name.

Ref.No	Part No.	Description				Remark
R538	1-216-093-00	METAL GLAZE	68K	5%	1/10W	
R539	1-216-077-00	METAL GLAZE	15K	5%	1/10W	
R540	1-216-063-00	METAL GLAZE	3.9K	5%	1/10W	
R541	1-216-061-00	METAL GLAZE	3.3K	5%	1/10W	
R546	1-216-053-00	METAL GLAZE	1.5K	5%	1/10W	
R547	1-216-053-00	METAL GLAZE	1.5K	5%	1/10W	
R550	1-216-101-00	METAL GLAZE	150K	5%	1/10W	
R551	1-216-073-00	METAL GLAZE	10K	5%	1/10W	
R552	1-216-073-00	METAL GLAZE	10K	5%	1/10W	
R553	1-216-049-00	METAL GLAZE	1K	5%	1/10W	
R555	1-216-097-00	METAL GLAZE	100K	5%	1/10W	
R556	1-216-089-00	METAL GLAZE	47K	5%	1/10W	
R557	1-216-089-00	METAL GLAZE	47K	5%	1/10W	
R562	1-216-295-00	METAL GLAZE	0	5%	1/10W	
R566	1-216-049-00	METAL GLAZE	1K	5%	1/10W	
R567	1-216-049-00	METAL GLAZE	1K	5%	1/10W	
R569	1-216-097-00	METAL GLAZE	100K	5%	1/10W	
R570	1-216-029-00	METAL GLAZE	150	5%	1/10W	
R572	1-216-109-00	METAL GLAZE	330K	5%	1/10W	
R573	1-216-097-00	METAL GLAZE	100K	5%	1/10W	
R574	1-216-097-00	METAL GLAZE	100K	5%	1/10W	
R575	1-216-049-00	METAL GLAZE	1K	5%	1/10W	
R576	1-216-049-00	METAL GLAZE	1K	5%	1/10W	
R577	1-216-049-00	METAL GLAZE	1K	5%	1/10W	
R578	1-216-057-00	METAL GLAZE	2.2K	5%	1/10W	
R579	1-216-065-00	METAL GLAZE	4.7K	5%	1/10W	
R580	1-216-097-00	METAL GLAZE	100K	5%	1/10W	
R581	1-216-295-00	METAL GLAZE	0	5%	1/10W	
R583	1-216-059-00	METAL GLAZE	2.7K	5%	1/10W	
R584	1-216-073-00	METAL GLAZE	10K	5%	1/10W	
R585	1-216-073-00	METAL GLAZE	10K	5%	1/10W	
R586	1-216-049-00	METAL GLAZE	1K	5%	1/10W	
R587	1-216-295-00	METAL GLAZE	0	5%	1/10W	
R590	1-216-295-00	METAL GLAZE	0	5%	1/10W	
R592	1-216-295-00	METAL GLAZE	0	5%	1/10W	
R593	1-216-089-00	METAL GLAZE	47K	5%	1/10W	
R594	1-216-089-00	METAL GLAZE	47K	5%	1/10W	
R595	1-216-295-00	METAL GLAZE	0	5%	1/10W	
R598	1-216-295-00	METAL GLAZE	0	5%	1/10W	
R600	1-216-065-00	METAL GLAZE	4.7K	5%	1/10W	
R601	1-216-045-00	METAL GLAZE	680	5%	1/10W	
R602	1-216-045-00	METAL GLAZE	680	5%	1/10W	
R603	1-216-049-00	METAL GLAZE	1K	5%	1/10W	
R604	1-216-073-00	METAL GLAZE	10K	5%	1/10W	
R605	1-216-097-00	METAL GLAZE	100K	5%	1/10W	
R606	1-216-097-00	METAL GLAZE	100K	5%	1/10W	
R607	1-216-049-00	METAL GLAZE	1K	5%	1/10W	
R608	1-216-073-00	METAL GLAZE	10K	5%	1/10W	
R609	1-216-045-00	METAL GLAZE	680	5%	1/10W	
R610	1-216-063-00	METAL GLAZE	3.9K	5%	1/10W	
R611	1-216-045-00	METAL GLAZE	680	5%	1/10W	
R612	1-216-059-00	METAL GLAZE	2.7K	5%	1/10W	
R613	1-216-109-00	METAL GLAZE	330K	5%	1/10W	
R614	1-216-063-00	METAL GLAZE	3.9K	5%	1/10W	
R615	1-216-127-11	METAL GLAZE	1.8M	5%	1/10W	
R616	1-216-109-00	METAL GLAZE	330K	5%	1/10W	
R617	1-216-089-00	METAL GLAZE	47K	5%	1/10W	
R618	1-216-057-00	METAL GLAZE	2.2K	5%	1/10W	
R619	1-216-057-00	METAL GLAZE	2.2K	5%	1/10W	
R620	1-216-057-00	METAL GLAZE	2.2K	5%	1/10W	
R621	1-216-059-00	METAL GLAZE	2.7K	5%	1/10W	
R622	1-216-109-00	METAL GLAZE	330K	5%	1/10W	
R623	1-216-065-00	METAL GLAZE	4.7K	5%	1/10W	
R624	1-216-065-00	METAL GLAZE	4.7K	5%	1/10W	
R625	1-216-065-00	METAL GLAZE	4.7K	5%	1/10W	
R626	1-216-073-00	METAL GLAZE	10K	5%	1/10W	
R627	1-216-065-00	METAL GLAZE	4.7K	5%	1/10W	
R628	1-216-073-00	METAL GLAZE	10K	5%	1/10W	
R629	1-216-065-00	METAL GLAZE	4.7K	5%	1/10W	
R630	1-216-065-00	METAL GLAZE	4.7K	5%	1/10W	
R631	1-216-097-00	METAL GLAZE	100K	5%	1/10W	
R632	1-216-061-00	METAL GLAZE	3.3K	5%	1/10W	
R633	1-216-061-00	METAL GLAZE	3.3K	5%	1/10W	
R634	1-216-081-00	METAL GLAZE	22K	5%	1/10W	
R635	1-216-081-00	METAL GLAZE	22K	5%	1/10W	
R636	1-216-105-00	METAL GLAZE	220K	5%	1/10W	
R637	1-216-085-00	METAL GLAZE	33K	5%	1/10W	
R638	1-216-085-00	METAL GLAZE	33K	5%	1/10W	
R639	1-216-097-00	METAL GLAZE	100K	5%	1/10W	
R640	1-216-097-00	METAL GLAZE	100K	5%	1/10W	
R641	1-216-065-00	METAL GLAZE	4.7K	5%	1/10W	
R642	1-216-065-00	METAL GLAZE	4.7K	5%	1/10W	
R643	1-216-097-00	METAL GLAZE	100K	5%	1/10W	
R644	1-216-097-00	METAL GLAZE	100K	5%	1/10W	
R645	1-216-097-00	METAL GLAZE	100K	5%	1/10W	
R646	1-216-097-00	METAL GLAZE	100K	5%	1/10W	
R647	1-216-085-00	METAL GLAZE	33K	5%	1/10W	
R648	1-216-089-00	METAL GLAZE	47K	5%	1/10W	
R649	1-216-085-00	METAL GLAZE	33K	5%	1/10W	
R650	1-216-089-00	METAL GLAZE	47K	5%	1/10W	
R652	1-216-097-00	METAL GLAZE	100K	5%	1/10W	
R653	1-216-089-00	METAL GLAZE	47K	5%	1/10W	
R654	1-216-085-00	METAL GLAZE	33K	5%	1/10W	
R655	1-216-295-00	METAL GLAZE	0	5%	1/10W	
R656	1-216-085-00	METAL GLAZE	33K	5%	1/10W	
R657	1-216-089-00	METAL GLAZE	47K	5%	1/10W	
R659	1-216-097-00	METAL GLAZE	100K	5%	1/10W	
R660	1-216-069-00	METAL GLAZE	6.8K	5%	1/10W	
R661	1-216-061-00	METAL GLAZE	3.3K	5%	1/10W	
R662	1-216-073-00	METAL GLAZE	10K	5%	1/10W	
R663	1-216-107-00	METAL GLAZE	270K	5%	1/10W	
R666	1-216-097-00	METAL GLAZE	100K	5%	1/10W	
R668	1-216-057-00	METAL GLAZE	2.2K	5%	1/10W	
R669	1-216-061-00	METAL GLAZE	3.3K	5%	1/10W	
R670	1-216-073-00	METAL GLAZE	10K	5%	1/10W	

When indicating parts by reference number, please include the board name.

PC-35 AS-22

Ref.No	Part No.	Description				Remark
R671	1-216-073-00	METAL GLAZE	10K	5%	1/10W	
R672	1-216-057-00	METAL GLAZE	2.2K	5%	1/10W	
R674	1-216-073-00	METAL GLAZE	10K	5%	1/10W	
R675	1-216-057-00	METAL GLAZE	2.2K	5%	1/10W	
R677	1-216-295-00	METAL GLAZE	0	5%	1/10W	
R679	1-216-097-00	METAL GLAZE	100K	5%	1/10W	
R680	1-216-079-00	METAL GLAZE	18K	5%	1/10W	
R681	1-216-097-00	METAL GLAZE	100K	5%	1/10W	
R682	1-216-097-00	METAL GLAZE	100K	5%	1/10W	
R684	1-216-049-00	METAL GLAZE	1K	5%	1/10W	
R685	1-216-065-00	METAL GLAZE	4.7K	5%	1/10W	
R686	1-216-065-00	METAL GLAZE	4.7K	5%	1/10W	
R688	1-216-097-00	METAL GLAZE	100K	5%	1/10W	
R689	1-216-097-00	METAL GLAZE	100K	5%	1/10W	
R690	1-216-097-00	METAL GLAZE	100K	5%	1/10W	
R691	1-216-085-00	METAL GLAZE	33K	5%	1/10W	
R692	1-216-085-00	METAL GLAZE	33K	5%	1/10W	
R693	1-216-073-00	METAL GLAZE	10K	5%	1/10W	
R694	1-216-089-00	METAL GLAZE	47K	5%	1/10W	
R695	1-216-089-00	METAL GLAZE	47K	5%	1/10W	
R698	1-216-091-00	METAL GLAZE	56K	5%	1/10W	
R699	1-216-089-00	METAL GLAZE	47K	5%	1/10W	
R700	1-216-295-00	METAL GLAZE	0	5%	1/10W	
R701	1-216-097-00	METAL GLAZE	100K	5%	1/10W	
R704	1-216-097-00	METAL GLAZE	100K	5%	1/10W	
R705	1-216-097-00	METAL GLAZE	100K	5%	1/10W	
R708	1-216-049-00	METAL GLAZE	1K	5%	1/10W	
R710	1-216-121-00	METAL GLAZE	1M	5%	1/10W	
R711	1-216-121-00	METAL GLAZE	1M	5%	1/10W	
R713	1-216-057-00	METAL GLAZE	2.2K	5%	1/10W	
R714	1-216-045-00	METAL GLAZE	680	5%	1/10W	
R715	1-216-057-00	METAL GLAZE	2.2K	5%	1/10W	
R716	1-216-295-00	METAL GLAZE	0	5%	1/10W	
R717	1-216-295-00	METAL GLAZE	0	5%	1/10W	

VARIABLE RESISTOR

RV301	1-230-868-11	RES, ADJ, METAL GLAZE	2.2K
RV302	1-230-868-11	RES, ADJ, METAL GLAZE	2.2K
RV303	1-230-876-11	RES, ADJ, METAL GLAZE	470K
RV304	1-238-223-11	RES, ADJ, METAL GLAZE	10K
RV305	1-238-223-11	RES, ADJ, METAL GLAZE	10K
RV306	1-230-868-11	RES, ADJ, METAL GLAZE	2.2K
RV307	1-238-219-11	RES, ADJ, METAL GRAZE	470
RV309	1-230-871-11	RES, ADJ, METAL GLAZE	22K
RV310	1-230-871-11	RES, ADJ, METAL GLAZE	22K

****

Ref.No	Part No.	Description				Remark
	*A-7061-980-A	AS-22 BOARD, COMPLETE (Ref.No 9,000 Series)				
		**********				

CAPACITOR

C231	1-126-160-11	ELECT	1MF	20%	50V
C232	1-124-584-00	ELECT	100MF	20%	10V
C233	1-124-584-00	ELECT	100MF	20%	10V
C234	1-163-038-00	CERAMIC CHIP	0.1MF		25V
C235	1-126-160-11	ELECT	1MF	20%	50V
C236	1-164-161-11	CERAMIC CHIP	0.0022MF		50V
C237	1-126-162-11	ELECT	3.3MF	20%	25V
C238	1-163-038-00	CERAMIC CHIP	0.1MF		25V
C239	1-124-584-00	ELECT	100MF	20%	10V
C240	1-163-038-00	CERAMIC CHIP	0.1MF		25V
C241	1-124-584-00	ELECT	100MF	20%	10V
C245	1-126-157-11	ELECT	10MF	20%	10V
C246	1-124-584-00	ELECT	100MF	20%	10V
C611	1-126-162-11	ELECT	3.3MF	20%	35V
C612	1-163-038-00	CERAMIC CHIP	0.1MF		25V
C613	1-163-038-00	CERAMIC CHIP	0.1MF		25V
C614	1-164-232-11	CERAMIC CHIP	0.01MF	10%	50V
C615	1-164-232-11	CERAMIC CHIP	0.01MF	10%	50V
C616	1-164-232-11	CERAMIC CHIP	0.01MF	10%	50V
C617	1-164-232-11	CERAMIC CHIP	0.01MF	10%	50V
C618	1-164-232-11	CERAMIC CHIP	0.01MF	10%	50V
C619	1-163-038-00	CERAMIC CHIP	0.1MF		25V
C620	1-163-038-00	CERAMIC CHIP	0.1MF		25V
C621	1-164-232-11	CERAMIC CHIP	0.01MF	10%	50V
C622	1-164-232-11	CERAMIC CHIP	0.01MF	10%	50V
C623	1-163-038-00	CERAMIC CHIP	0.1MF		25V
C624	1-163-038-00	CERAMIC CHIP	0.1MF		25V
C625	1-164-232-11	CERAMIC CHIP	0.01MF	10%	50V
C630	1-164-232-11	CERAMIC CHIP	0.01MF		50V
C633	1-163-038-00	CERAMIC CHIP	0.1MF		25V
C634	1-124-239-00	ELECT	6.8MF	20%	10V
C635	1-163-038-00	CERAMIC CHIP	0.1MF		25V
C636	1-163-038-00	CERAMIC CHIP	0.1MF		25V
C637	1-126-154-11	ELECT	47MF	20%	6.3V
C638	1-163-111-00	CERAMIC CHIP	56PF	5%	50V
C639	1-164-232-11	CERAMIC CHIP	0.01MF		50V
C640	1-126-154-11	ELECT	47MF	20%	6.3V
C641	1-163-038-00	CERAMIC CHIP	0.1MF		25V
C642	1-126-153-11	ELECT	22MF	20%	6.3V
C643	1-163-038-00	CERAMIC CHIP	0.1MF		25V
C644	1-124-967-11	ELECT	10MF	20%	10V
C645	1-163-035-00	CERAMIC CHIP	0.047MF		50V
C646	1-163-101-00	CERAMIC CHIP	22PF	5%	50V
C647	1-163-101-00	CERAMIC CHIP	22PF	5%	50V
C648	1-164-232-11	CERAMIC CHIP	0.01MF		50V
C649	1-164-232-11	CERAMIC CHIP	0.01MF		50V
C650	1-126-157-11	ELECT	10MF	20%	10V
C651	1-126-157-11	ELECT	10MF	20%	10V
C652	1-163-809-11	CERAMIC CHIP	0.047MF	10%	25V

When indicating parts by reference number, please include the board name.

Ref.No	Part No.	Description			Remark
C653	1-124-967-11	ELECT	10MF	20%	10V
C654	1-163-038-00	CERAMIC CHIP	0.1MF		25V
C655	1-163-038-00	CERAMIC CHIP	0.1MF		25V
C656	1-126-160-11	ELECT	1MF	20%	50V
C657	1-126-160-11	ELECT	1MF	20%	50V
C658	1-126-160-11	ELECT	1MF	20%	50V
C659	1-126-160-11	ELECT	1MF	20%	50V
C660	1-126-160-11	ELECT	1MF	20%	50V
C661	1-164-232-11	CERAMIC CHIP	0.01MF		50V
C662	1-163-143-00	CERAMIC CHIP	0.0012MF	5%	50V
C663	1-163-137-00	CERAMIC CHIP	680PF	5%	50V
C664	1-164-232-11	CERAMIC CHIP	0.01MF		50V
C665	1-164-232-11	CERAMIC CHIP	0.01MF		50V
C666	1-163-038-00	CERAMIC CHIP	0.1MF		25V
C668	1-163-038-00	CERAMIC CHIP	0.1MF		25V
C669	1-163-038-00	CERAMIC CHIP	0.1MF		25V
C670	1-163-009-11	CERAMIC CHIP	0.001MF	10%	50V
C671	1-164-232-11	CERAMIC CHIP	0.01MF	10%	50V
C701	1-164-232-11	CERAMIC CHIP	0.01MF	10%	50V
C702	1-164-232-11	CERAMIC CHIP	0.01MF	10%	50V
C703	1-163-125-00	CERAMIC CHIP	220PF	5%	50V
C704	1-124-465-00	ELECT	0.47MF	20%	50V
C705	1-163-011-11	CERAMIC CHIP	0.0015MF	10%	50V
C706	1-163-016-00	CERAMIC CHIP	0.0039MF	10%	50V
C707	1-163-125-00	CERAMIC CHIP	220PF	5%	50V
C708	1-164-161-11	CERAMIC CHIP	0.0022MF	10%	50V
C710	1-124-584-00	ELECT	100MF	20%	10V
C711	1-164-232-11	CERAMIC CHIP	0.01MF	10%	50V
C712	1-124-257-00	ELECT	2.2MF	20%	50V
C713	1-163-011-11	CERAMIC CHIP	0.0015MF	10%	50V
C714	1-163-038-00	CERAMIC CHIP	0.1MF		25V
C715	1-163-133-00	CERAMIC CHIP	470PF	5%	50V
C716	1-124-229-00	ELECT	33MF	20%	6.3V
C717	1-163-088-00	CERAMIC CHIP	5PF	0.25PF	50V
C718	1-163-017-00	CERAMIC CHIP	0.0047MF	10%	50V
C719	1-163-125-00	CERAMIC CHIP	220PF	5%	50V
C720	1-162-587-11	CERAMIC CHIP	0.039MF	10%	25V
C721	1-163-020-00	CERAMIC CHIP	0.0082MF	10%	50V
C722	1-163-007-11	CERAMIC CHIP	680PF	10%	50V
C723	1-126-160-11	ELECT	1MF	20%	50V
C724	1-126-157-11	ELECT	10MF	20%	6.3V
C725	1-126-157-11	ELECT	10MF	20%	6.3V
C726	1-126-153-11	ELECT	22MF	20%	6.3V
C727	1-124-239-00	ELECT	6.8MF	20%	10V
C729	1-126-094-11	ELECT	4.7MF	20%	35V
C730	1-126-153-11	ELECT	22MF	20%	6.3V
C731	1-124-225-00	ELECT	100MF	20%	6.3V
C732	1-124-257-00	ELECT	2.2MF	20%	50V
C733	1-164-182-11	CERAMIC CHIP	0.0033MF	10%	50V
C734	1-163-038-00	CERAMIC CHIP	0.1MF		25V
C735	1-164-161-11	CERAMIC CHIP	0.0022MF	10%	50V
C736	1-163-123-00	CERAMIC CHIP	180PF	5%	50V
C737	1-164-232-11	CERAMIC CHIP	0.01MF	10%	50V

Ref.No	Part No.	Description			Remark
C738	1-124-225-00	ELECT	100MF	20%	6.3V
C739	1-163-088-00	CERAMIC CHIP	5PF	0.25PF	50V
C740	1-163-038-00	CERAMIC CHIP	0.1MF		25V
C741	1-126-154-11	ELECT	47MF	20%	6.3V
C742	1-124-239-00	ELECT	6.8MF	20%	10V
C743	1-163-038-00	CERAMIC CHIP	0.1MF		25V
C744	1-163-109-00	CERAMIC CHIP	47PF	5%	50V
C745	1-163-109-00	CERAMIC CHIP	47PF	5%	50V
C746	1-163-038-00	CERAMIC CHIP	0.1MF		25V
C747	1-163-038-00	CERAMIC CHIP	0.1MF		25V
C748	1-163-109-00	CERAMIC CHIP	47PF	5%	50V
C749	1-163-109-00	CERAMIC CHIP	47PF	5%	50V
C750	1-163-038-00	CERAMIC CHIP	0.1MF		25V
C751	1-164-232-11	CERAMIC CHIP	0.01MF	10%	50V
C752	1-164-232-11	CERAMIC CHIP	0.01MF	10%	50V
C753	1-163-125-00	CERAMIC CHIP	220PF	5%	50V
C754	1-124-465-00	ELECT	0.47MF	20%	50V
C755	1-163-011-11	CERAMIC CHIP	0.0015MF	10%	50V
C756	1-163-016-00	CERAMIC CHIP	0.0039MF	10%	50V
C757	1-163-125-00	CERAMIC CHIP	220PF	5%	50V
C758	1-164-161-11	CERAMIC CHIP	0.0022MF	10%	50V
C760	1-124-584-00	ELECT	100MF	20%	10V
C761	1-164-232-11	CERAMIC CHIP	0.01MF	10%	50V
C762	1-124-257-00	ELECT	2.2MF	20%	50V
C763	1-163-011-11	CERAMIC CHIP	0.0015MF	10%	50V
C764	1-163-038-00	CERAMIC CHIP	0.1MF		25V
C765	1-163-133-00	CERAMIC CHIP	470PF	5%	50V
C766	1-124-229-00	ELECT	33MF	20%	6.3V
C767	1-163-088-00	CERAMIC CHIP	5PF	0.25PF	50V
C768	1-163-017-00	CERAMIC CHIP	0.0047MF	10%	50V
C769	1-163-125-00	CERAMIC CHIP	220PF	5%	50V
C770	1-162-587-11	CERAMIC CHIP	0.039MF	10%	25V
C771	1-163-020-00	CERAMIC CHIP	0.0082MF	10%	50V
C772	1-163-007-11	CERAMIC CHIP	680PF	10%	50V
C773	1-126-160-11	ELECT	1MF	20%	50V
C774	1-126-157-11	ELECT	10MF	20%	6.3V
C775	1-126-157-11	ELECT	10MF	20%	6.3V
C776	1-126-153-11	ELECT	22MF	20%	6.3V
C777	1-124-239-00	ELECT	6.8MF	20%	10V
C779	1-126-094-11	ELECT	4.7MF	20%	35V
C780	1-126-153-11	ELECT	22MF	20%	6.3V
C781	1-124-225-00	ELECT	100MF	20%	6.3V
C782	1-124-257-00	ELECT	2.2MF	20%	50V
C783	1-164-182-11	CERAMIC CHIP	0.0033MF	10%	50V
C784	1-163-038-00	CERAMIC CHIP	0.1MF		25V
C785	1-164-161-11	CERAMIC CHIP	0.0022MF	10%	50V
C786	1-163-123-00	CERAMIC CHIP	180PF	5%	50V
C787	1-164-232-11	CERAMIC CHIP	0.01MF	10%	50V
C788	1-124-225-00	ELECT	100MF	20%	6.3V
C789	1-163-088-00	CERAMIC CHIP	5PF	0.25PF	50V
C790	1-163-038-00	CERAMIC CHIP	0.1MF		25V
C791	1-126-154-11	ELECT	47MF	20%	6.3V
C792	1-124-239-00	ELECT	6.8MF	20%	10V

When indicating parts by reference number, please include the board name.

AS-22

Ref.No	Part No.	Description			Remark
C793	1-163-109-00	CERAMIC CHIP	47PF	5% 50V	
C794	1-163-109-00	CERAMIC CHIP	47PF	5% 50V	
C795	1-163-038-00	CERAMIC CHIP	0.1MF	25V	
C796	1-126-162-11	ELECT	3.3MF	20% 35V	
C797	1-163-038-00	CERAMIC CHIP	0.1MF	25V	
		CONNECTOR			
CN231	1-565-880-11	PIN, CONNECTOR (PC BOARD) 8P			
CN232	1-565-527-11	PIN, CONNECTOR (PC BOARD) 2P			
CN701	*1-566-182-11	PIN, CONNECTOR (PC BOARD) 3P			
CN702	*1-566-765-11	PIN, CONNECTOR (PC BOARD) 10P			
CN703	*1-566-761-11	PIN, CONNECTOR (PC BOARD) 6P			
		DIODE			
D701	8-719-400-18	DIODE MA152WK			
		FILTER			
FL701	1-236-550-11	BPF (1.5MHz)			
FL702	1-236-551-11	BPF (1.7MHz)			
		IC			
IC231	8-759-603-27	IC M5201FP			
IC232	8-759-701-02	IC NJM2073M			
IC701	8-752-033-01	IC CXA1237AR			
IC702	8-752-033-01	IC CXA1237AR			
IC703	8-759-100-94	IC UPC358G2			
IC704	8-759-932-54	IC MC14066BF			
IC705	8-759-100-94	IC UPC358G2			
IC706	8-759-100-94	IC UPC358G2			
IC707	8-759-932-54	IC MC14066BF			
IC708	8-752-334-42	IC CXD2106Q			
		COIL			
L231	1-410-138-11	INDUCTOR	4.7UH		
L701	1-410-836-41	INDUCTOR	220UH		
L702	1-410-836-41	INDUCTOR	220UH		
L703	1-408-970-21	INDUCTOR	10UH		
L705	1-410-828-41	INDUCTOR	47UH		
L706	1-410-828-41	INDUCTOR	47UH		
L707	1-410-828-41	INDUCTOR	47UH		
L708	1-410-384-31	INDUCTOR CHIP	18UH		
L709	1-410-828-41	INDUCTOR	47UH		
		TRANSISTOR			
Q231	8-729-805-25	TRANSISTOR 2SB1121			
Q232	8-729-901-01	TRANSISTOR DTC144EK			
Q233	8-729-901-01	TRANSISTOR DTC144EK			
Q234	8-729-902-99	TRANSISTOR DTC114TK			
Q235	8-729-902-93	TRANSISTOR FMG4			
Q701	8-729-100-66	TRANSISTOR 2SC1623			
Q702	8-729-220-93	TRANSISTOR 2SK209G			
Q703	8-729-901-01	TRANSISTOR DTC144EK			
Q704	8-729-220-93	TRANSISTOR 2SK209G			
Q705	8-729-900-51	TRANSISTOR DTA114TK			

Ref.No	Part No.	Description	Remark
Q706	8-729-901-01	TRANSISTOR DTC144EK	
Q707	8-729-901-06	TRANSISTOR DTA144EK	
Q708	8-729-900-51	TRANSISTOR DTA114TK	
Q709	8-729-901-01	TRANSISTOR DTC144EK	
Q710	8-729-901-06	TRANSISTOR DTA144EK	
Q711	8-729-901-01	TRANSISTOR DTC144EK	
Q712	8-729-901-01	TRANSISTOR DTC144EK	
Q713	8-729-100-66	TRANSISTOR 2SC1623	
Q714	8-729-100-66	TRANSISTOR 2SC1623	
Q715	8-729-901-01	TRANSISTOR DTC144EK	
Q716	8-729-100-66	TRANSISTOR 2SC1623	
Q717	8-729-100-66	TRANSISTOR 2SC1623	
Q718	8-729-100-66	TRANSISTOR 2SC1623	
Q719	8-729-100-66	TRANSISTOR 2SC1623	
Q720	8-729-100-66	TRANSISTOR 2SC1623	
Q721	8-729-216-22	TRANSISTOR 2SA1162	
Q723	8-729-100-66	TRANSISTOR 2SC1623	
Q724	8-729-100-66	TRANSISTOR 2SC1623	
Q725	8-729-903-10	TRANSISTOR FMW1	
Q726	8-729-100-66	TRANSISTOR 2SC1623	
Q727	8-729-216-22	TRANSISTOR 2SA1162	
Q728	8-729-901-06	TRANSISTOR DTA144EK	
Q729	8-729-903-97	TRANSISTOR FMS1FE	
Q730	8-729-903-10	TRANSISTOR FMW1	
Q732	8-729-100-66	TRANSISTOR 2SC1623	
Q733	8-729-100-66	TRANSISTOR 2SC1623	
		RESISTOR	
R231	1-216-097-00	METAL GLAZE 100K 5% 1/10W	
R232	1-216-115-00	METAL GLAZE 560K 5% 1/10W	
R233	1-216-115-00	METAL GLAZE 560K 5% 1/10W	
R234	1-216-089-00	METAL GLAZE 47K 5% 1/10W	
R235	1-216-093-00	METAL GLAZE 68K 5% 1/10W	
R236	1-216-085-00	METAL GLAZE 33K 5% 1/10W	
R237	1-216-025-00	METAL GLAZE 100 5% 1/10W	
R238	1-216-295-00	METAL GLAZE 0 5% 1/10W	
R239	1-216-049-00	METAL GLAZE 1K 5% 1/10W	
R240	1-216-045-00	METAL GLAZE 680 5% 1/10W	
R242	1-216-298-00	METAL GLAZE 2.2 5% 1/10W	
R243	1-216-134-00	METAL GLAZE 2.2 5% 1/8W	
R245	1-216-065-00	METAL GLAZE 4.7K 5% 1/10W	
R246	1-216-073-00	METAL GLAZE 10K 5% 1/10W	
R598	1-216-295-00	METAL GLAZE 0 5% 1/10W	
R599	1-216-295-00	METAL GLAZE 0 5% 1/10W	
R605	1-216-049-00	METAL GLAZE 1K 5% 1/10W	
R606	1-216-081-00	METAL GLAZE 22K 5% 1/10W	
R607	1-216-081-00	METAL GLAZE 22K 5% 1/10W	
R608	1-216-081-00	METAL GLAZE 22K 5% 1/10W	
R609	1-216-081-00	METAL GLAZE 22K 5% 1/10W	
R611	1-216-049-00	METAL GLAZE 1K 5% 1/10W	
R612	1-216-049-00	METAL GLAZE 1K 5% 1/10W	
R613	1-216-057-00	METAL GLAZE 2.2K 5% 1/10W	
R614	1-216-073-00	METAL GLAZE 10K 5% 1/10W	

When indicating parts by reference number, please include the board name.

Ref.No	Part No.	Description				Remark
R615	1-216-073-00	METAL GLAZE	10K	5%	1/10W	
R616	1-216-085-00	METAL GLAZE	33K	5%	1/10W	
R617	1-216-057-00	METAL GLAZE	2.2K	5%	1/10W	
R618	1-216-065-00	METAL GLAZE	4.7K	5%	1/10W	
R620	1-216-295-00	METAL GLAZE	0	5%	1/10W	
R621	1-216-077-00	METAL GLAZE	15K	5%	1/10W	
R622	1-216-085-00	METAL GLAZE	33K	5%	1/10W	
R624	1-216-295-00	METAL GLAZE	0	5%	1/10W	
R625	1-216-295-00	METAL GLAZE	0	5%	1/10W	
R626	1-216-073-00	METAL GLAZE	10K	5%	1/10W	
R627	1-216-073-00	METAL GLAZE	10K	5%	1/10W	
R628	1-216-073-00	METAL GLAZE	10K	5%	1/10W	
R630	1-216-097-00	METAL GLAZE	100K	5%	1/10W	
R631	1-216-073-00	METAL GLAZE	10K	5%	1/10W	
R632	1-216-063-00	METAL GLAZE	3.9K	5%	1/10W	
R633	1-216-059-00	METAL GLAZE	2.7K	5%	1/10W	
R634	1-216-097-00	METAL GLAZE	100K	5%	1/10W	
R635	1-216-081-00	METAL GLAZE	22K	5%	1/10W	
R636	1-216-073-00	METAL GLAZE	10K	5%	1/10W	
R637	1-216-083-00	METAL GLAZE	27K	5%	1/10W	
R638	1-216-089-00	METAL GLAZE	47K	5%	1/10W	
R639	1-216-049-00	METAL GLAZE	1K	5%	1/10W	
R640	1-216-081-00	METAL GLAZE	22K	5%	1/10W	
R641	1-216-083-00	METAL GLAZE	27K	5%	1/10W	
R642	1-216-053-00	METAL GLAZE	1.5K	5%	1/10W	
R643	1-216-079-00	METAL GLAZE	18K	5%	1/10W	
R644	1-216-073-00	METAL GLAZE	10K	5%	1/10W	
R645	1-216-065-00	METAL GLAZE	4.7K	5%	1/10W	
R646	1-216-053-00	METAL GLAZE	1.5K	5%	1/10W	
R647	1-216-079-00	METAL GLAZE	18K	5%	1/10W	
R648	1-216-057-00	METAL GLAZE	2.2K	5%	1/10W	
R649	1-216-073-00	METAL GLAZE	10K	5%	1/10W	
R650	1-216-089-00	METAL GLAZE	47K	5%	1/10W	
R652	1-216-295-00	METAL GLAZE	0	5%	1/10W	
R653	1-216-077-00	METAL GLAZE	15K	5%	1/10W	
R654	1-216-077-00	METAL GLAZE	15K	5%	1/10W	
R655	1-216-085-00	METAL GLAZE	33K	5%	1/10W	
R656	1-216-075-00	METAL GLAZE	12K	5%	1/10W	
R657	1-216-097-00	METAL GLAZE	100K	5%	1/10W	
R658	1-216-097-00	METAL GLAZE	100K	5%	1/10W	
R659	1-216-077-00	METAL GLAZE	15K	5%	1/10W	
R660	1-216-077-00	METAL GLAZE	15K	5%	1/10W	
R661	1-216-097-00	METAL GLAZE	100K	5%	1/10W	
R662	1-216-097-00	METAL GLAZE	100K	5%	1/10W	
R663	1-216-075-00	METAL GLAZE	12K	5%	1/10W	
R664	1-216-073-00	METAL GLAZE	10K	5%	1/10W	
R665	1-216-073-00	METAL GLAZE	10K	5%	1/10W	
R666	1-216-079-00	METAL GLAZE	18K	5%	1/10W	
R667	1-216-063-00	METAL GLAZE	3.9K	5%	1/10W	
R668	1-216-295-00	METAL GLAZE	0	5%	1/10W	
R670	1-216-295-00	METAL GLAZE	0	5%	1/10W	
R672	1-216-107-00	METAL GLAZE	270K	5%	1/10W	
R673	1-216-085-00	METAL GLAZE	33K	5%	1/10W	
R674	1-216-079-00	METAL GLAZE	18K	5%	1/10W	
R675	1-216-063-00	METAL GLAZE	3.9K	5%	1/10W	
R676	1-216-295-00	METAL GLAZE	0	5%	1/10W	
R678	1-216-107-00	METAL GLAZE	270K	5%	1/10W	
R679	1-216-085-00	METAL GLAZE	33K	5%	1/10W	
R680	1-216-089-00	METAL GLAZE	47K	5%	1/10W	
R681	1-216-295-00	METAL GLAZE	0	5%	1/10W	
R682	1-216-295-00	METAL GLAZE	0	5%	1/10W	
R685	1-216-073-00	METAL GLAZE	10K	5%	1/10W	
R686	1-216-073-00	METAL GLAZE	10K	5%	1/10W	
R687	1-216-073-00	METAL GLAZE	10K	5%	1/10W	
R688	1-216-073-00	METAL GLAZE	10K	5%	1/10W	
R689	1-216-073-00	METAL GLAZE	10K	5%	1/10W	
R690	1-216-073-00	METAL GLAZE	10K	5%	1/10W	
R691	1-216-071-00	METAL GLAZE	8.2K	5%	1/10W	
R692	1-216-077-00	METAL GLAZE	15K	5%	1/10W	
R693	1-216-071-00	METAL GLAZE	8.2K	5%	1/10W	
R694	1-216-077-00	METAL GLAZE	15K	5%	1/10W	
R695	1-216-057-00	METAL GLAZE	2.2K	5%	1/10W	
R696	1-216-103-00	METAL GLAZE	180K	5%	1/10W	
R697	1-216-057-00	METAL GLAZE	2.2K	5%	1/10W	
R698	1-216-057-00	METAL GLAZE	2.2K	5%	1/10W	
R699	1-216-103-00	METAL GLAZE	180K	5%	1/10W	
R700	1-216-073-00	METAL GLAZE	10K	5%	1/10W	
R701	1-216-065-00	METAL GLAZE	4.7K	5%	1/10W	
R702	1-216-065-00	METAL GLAZE	4.7K	5%	1/10W	
R703	1-216-065-00	METAL GLAZE	4.7K	5%	1/10W	
R704	1-216-065-00	METAL GLAZE	4.7K	5%	1/10W	
R705	1-216-059-00	METAL GLAZE	2.7K	5%	1/10W	
R706	1-216-649-11	METAL GLAZE	820	1%	1/10W	
R707	1-216-649-11	METAL GLAZE	820	1%	1/10W	
R708	1-216-077-00	METAL GLAZE	15K	5%	1/10W	
R709	1-216-075-00	METAL GLAZE	12K	5%	1/10W	
R710	1-216-063-00	METAL GLAZE	3.9K	5%	1/10W	
R711	1-216-057-00	METAL GLAZE	2.2K	5%	1/10W	
R712	1-216-045-00	METAL GLAZE	680	5%	1/10W	
R713	1-216-059-00	METAL GLAZE	2.7K	5%	1/10W	
R714	1-216-061-00	METAL GLAZE	3.3K	5%	1/10W	
R715	1-216-061-00	METAL GLAZE	3.3K	5%	1/10W	
R716	1-216-059-00	METAL GLAZE	2.7K	5%	1/10W	
R717	1-216-073-00	METAL GLAZE	10K	5%	1/10W	
R719	1-216-079-00	METAL GLAZE	18K	5%	1/10W	
R720	1-216-121-00	METAL GLAZE	1M	5%	1/10W	
R721	1-216-079-00	METAL GLAZE	18K	5%	1/10W	
R722	1-216-097-00	METAL GLAZE	100K	5%	1/10W	
R723	1-216-089-00	METAL GLAZE	47K	5%	1/10W	
R724	1-216-083-00	METAL GLAZE	27K	5%	1/10W	
R725	1-216-077-00	METAL GLAZE	15K	5%	1/10W	
R726	1-216-079-00	METAL GLAZE	18K	5%	1/10W	
R727	1-216-057-00	METAL GLAZE	2.2K	5%	1/10W	
R728	1-216-059-00	METAL GLAZE	2.7K	5%	1/10W	
R729	1-216-081-00	METAL GLAZE	22K	5%	1/10W	
R730	1-216-081-00	METAL GLAZE	22K	5%	1/10W	

When indicating parts by reference number, please include the board name.

AS-22 MR-19

Ref.No	Part No.	Description				Remark
R731	1-216-081-00	METAL GLAZE	22K	5%	1/10W	
R732	1-216-081-00	METAL GLAZE	22K	5%	1/10W	
R733	1-216-081-00	METAL GLAZE	22K	5%	1/10W	
R734	1-216-081-00	METAL GLAZE	22K	5%	1/10W	
R735	1-216-081-00	METAL GLAZE	22K	5%	1/10W	
R736	1-216-081-00	METAL GLAZE	22K	5%	1/10W	
R737	1-216-081-00	METAL GLAZE	22K	5%	1/10W	
R738	1-216-081-00	METAL GLAZE	22K	5%	1/10W	
R739	1-216-081-00	METAL GLAZE	22K	5%	1/10W	
R740	1-216-081-00	METAL GLAZE	22K	5%	1/10W	
R741	1-216-081-00	METAL GLAZE	22K	5%	1/10W	
R742	1-216-081-00	METAL GLAZE	22K	5%	1/10W	
R743	1-216-081-00	METAL GLAZE	22K	5%	1/10W	
R744	1-216-081-00	METAL GLAZE	22K	5%	1/10W	
R745	1-216-081-00	METAL GLAZE	22K	5%	1/10W	
R746	1-216-081-00	METAL GLAZE	22K	5%	1/10W	
R747	1-216-081-00	METAL GLAZE	22K	5%	1/10W	
R748	1-216-081-00	METAL GLAZE	22K	5%	1/10W	
R749	1-216-081-00	METAL GLAZE	22K	5%	1/10W	
R750	1-216-081-00	METAL GLAZE	22K	5%	1/10W	
R751	1-216-065-00	METAL GLAZE	4.7K	5%	1/10W	
R752	1-216-065-00	METAL GLAZE	4.7K	5%	1/10W	
R753	1-216-065-00	METAL GLAZE	4.7K	5%	1/10W	
R754	1-216-069-00	METAL GLAZE	6.8K	5%	1/10W	
R755	1-216-059-00	METAL GLAZE	2.7K	5%	1/10W	
R756	1-216-647-11	METAL GLAZE	680	1%	1/10W	
R757	1-216-647-11	METAL GLAZE	680	1%	1/10W	
R758	1-216-077-00	METAL GLAZE	15K	5%	1/10W	
R759	1-216-075-00	METAL GLAZE	12K	5%	1/10W	
R760	1-216-063-00	METAL GLAZE	3.9K	5%	1/10W	
R761	1-216-057-00	METAL GLAZE	2.2K	5%	1/10W	
R762	1-216-045-00	METAL GLAZE	680	5%	1/10W	
R763	1-216-059-00	METAL GLAZE	2.7K	5%	1/10W	
R764	1-216-061-00	METAL GLAZE	3.3K	5%	1/10W	
R765	1-216-061-00	METAL GLAZE	3.3K	5%	1/10W	
R766	1-216-059-00	METAL GLAZE	2.7K	5%	1/10W	
R767	1-216-073-00	METAL GLAZE	10K	5%	1/10W	
R769	1-216-079-00	METAL GLAZE	18K	5%	1/10W	
R770	1-216-295-00	METAL GLAZE	0	5%	1/10W	
R771	1-216-079-00	METAL GLAZE	18K	5%	1/10W	
R772	1-216-097-00	METAL GLAZE	100K	5%	1/10W	
R773	1-216-089-00	METAL GLAZE	47K	5%	1/10W	
R774	1-216-083-00	METAL GLAZE	27K	5%	1/10W	
R775	1-216-081-00	METAL GLAZE	22K	5%	1/10W	
R776	1-216-079-00	METAL GLAZE	18K	5%	1/10W	
R777	1-216-057-00	METAL GLAZE	2.2K	5%	1/10W	
R778	1-216-059-00	METAL GLAZE	2.7K	5%	1/10W	
R779	1-216-089-00	METAL GLAZE	47K	5%	1/10W	
R780	1-216-073-00	METAL GLAZE	10K	5%	1/10W	
R781	1-216-067-00	METAL GLAZE	5.6K	5%	1/10W	
R782	1-216-057-00	METAL GLAZE	2.2K	5%	1/10W	
R783	1-216-295-00	METAL GLAZE	0	5%	1/10W	
R784	1-216-051-00	METAL GLAZE	1.2K	5%	1/10W	

Ref.No	Part No.	Description				Remark
R785	1-216-049-00	METAL GLAZE	1K	5%	1/10W	
R786	1-216-061-00	METAL GLAZE	3.3K	5%	1/10W	
R787	1-216-085-00	METAL GLAZE	33K	5%	1/10W	
R788	1-216-081-00	METAL GLAZE	22K	5%	1/10W	
R789	1-216-057-00	METAL GLAZE	2.2K	5%	1/10W	
R790	1-216-081-00	METAL GLAZE	22K	5%	1/10W	
R791	1-216-081-00	METAL GLAZE	22K	5%	1/10W	
R792	1-216-057-00	METAL GLAZE	2.2K	5%	1/10W	
R793	1-216-049-00	METAL GLAZE	1K	5%	1/10W	
R794	1-216-049-00	METAL GLAZE	1K	5%	1/10W	
R795	1-216-057-00	METAL GLAZE	2.2K	5%	1/10W	
R796	1-216-063-00	METAL GLAZE	3.9K	5%	1/10W	
R797	1-216-073-00	METAL GLAZE	10K	5%	1/10W	
R798	1-216-085-00	METAL GLAZE	33K	5%	1/10W	
R799	1-216-057-00	METAL GLAZE	2.2K	5%	1/10W	

VARIABLE RESISTOR

RV701	1-238-223-11	RES, ADJ, METAL GLAZE 10K	
RV702	1-230-871-11	RES, ADJ, METAL GLAZE 22K	
RV703	1-238-223-11	RES, ADJ, METAL GLAZE 10K	
RV704	1-230-874-11	RES, ADJ, METAL GLAZE 100K	
RV706	1-230-873-11	RES, ADJ, METAL GLAZE 47K	
RV707	1-230-873-11	RES, ADJ, METAL GLAZE 47K	
RV710	1-230-873-11	RES, ADJ, METAL GLAZE 47K	
RV712	1-230-873-11	RES, ADJ, METAL GLAZE 47K	
RV713	1-238-222-11	RES, ADJ, METAL GLAZE 4.7K	
RV714	1-230-867-11	RES, ADJ, METAL GLAZE 1K	

CRYSTAL

X701	1-567-262-11	VIBRATOR, CRYSTAL

****

*A-7061-981-A MR-19 BOARD, COMPLETE (Ref.No 3,000 Series)
****

A-7068-142-A HR-3 (HIC) BOARD, COMPLETE

CAPACITOR

C813	1-162-940-11	CERAMIC CHIP 9PF	0.5PF	50V
C814	1-162-940-11	CERAMIC CHIP 9PF	0.5PF	50V
C816	1-162-953-11	CERAMIC CHIP 100PF	5%	50V
C817	1-162-952-11	CERAMIC CHIP 82PF	5%	50V
C818	1-163-038-00	CERAMIC CHIP 0.1MF		25V
C819	1-163-809-11	CERAMIC CHIP 0.047MF	10%	25V
C820	1-162-953-11	CERAMIC CHIP 100PF	5%	50V
C821	1-135-155-21	TANTAL. CHIP 4.7MF	20%	16V
C822	1-163-035-00	CERAMIC CHIP 0.047MF		50V
C823	1-163-035-00	CERAMIC CHIP 0.047MF		50V
C824	1-162-947-11	CERAMIC CHIP 33PF	5%	50V
C825	1-162-965-11	CERAMIC CHIP 0.0015MF	10%	50V
C827	1-162-958-11	CERAMIC CHIP 270PF	5%	50V
C828	1-163-035-00	CERAMIC CHIP 0.047MF		50V
C829	1-162-949-11	CERAMIC CHIP 47PF	5%	50V
C830	1-162-948-11	CERAMIC CHIP 39PF	5%	50V
C831	1-162-952-11	CERAMIC CHIP 82PF	5%	50V

When indicating parts by reference number, please include the board name.

Ref.No	Part No.	Description		Remark
C832	1-163-035-00	CERAMIC CHIP 0.047MF		50V
C833	1-126-601-11	ELECT CHIP 2.2MF	20%	50V
C834	1-162-949-11	CERAMIC CHIP 47PF	5%	50V
C835	1-162-948-11	CERAMIC CHIP 39PF	5%	50V
C837	1-124-778-00	ELECT CHIP 22MF	20%	6.3V
C838	1-163-035-00	CERAMIC CHIP 0.047MF		50V
C839	1-162-938-11	CERAMIC CHIP 7PF	0.5PF	50V
C840	1-162-941-11	CERAMIC CHIP 10PF	0.5PF	50V
C841	1-163-035-00	CERAMIC CHIP 0.047MF		50V
C842	1-163-035-00	CERAMIC CHIP 0.047MF		50V
C845	1-162-945-11	CERAMIC CHIP 22PF	5%	50V
C846	1-163-035-00	CERAMIC CHIP 0.047MF		50V
C847	1-163-035-00	CERAMIC CHIP 0.047MF		50V
C848	1-163-035-00	CERAMIC CHIP 0.047MF		50V
C849	1-163-035-00	CERAMIC CHIP 0.047MF		50V
C850	1-163-809-11	CERAMIC CHIP 0.047MF	10%	25V
C851	1-162-942-11	CERAMIC CHIP 12PF	5%	50V
C852	1-163-035-00	CERAMIC CHIP 0.047MF		50V
C853	1-162-938-11	CERAMIC CHIP 7PF	0.5PF	50V
C854	1-162-944-11	CERAMIC CHIP 18PF	5%	50V
C855	1-163-035-00	CERAMIC CHIP 0.047MF		50V
C856	1-163-035-00	CERAMIC CHIP 0.047MF		50V
C857	1-163-035-00	CERAMIC CHIP 0.047MF		50V
C858	1-163-035-00	CERAMIC CHIP 0.047MF		50V
C859	1-162-949-11	CERAMIC CHIP 47PF	5%	50V
C860	1-163-035-00	CERAMIC CHIP 0.047MF		50V
C861	1-162-937-11	CERAMIC CHIP 6PF	0.5PF	50V
C862	1-162-945-11	CERAMIC CHIP 22PF	5%	50V
C863	1-126-603-11	ELECT CHIP 4.7MF	20%	35V
C864	1-163-035-00	CERAMIC CHIP 0.047MF		50V
C865	1-126-603-11	ELECT CHIP 4.7MF	20%	35V
C866	1-163-035-00	CERAMIC CHIP 0.047MF		50V
C870	1-162-955-11	CERAMIC CHIP 150PF	5%	50V
C872	1-162-974-11	CERAMIC CHIP 0.01MF		50V
C873	1-163-809-11	CERAMIC CHIP 0.047MF	10%	25V
C876	1-162-945-11	CERAMIC CHIP 22PF	5%	50V
C881	1-163-035-00	CERAMIC CHIP 0.047MF		50V
C882	1-124-778-00	ELECT CHIP 22MF	20%	6.3V
C883	1-162-974-11	CERAMIC CHIP 0.01MF		50V
C884	1-163-035-00	CERAMIC CHIP 0.047MF		50V
C886	1-164-232-11	CERAMIC CHIP 0.01MF	10%	50V
C887	1-163-035-00	CERAMIC CHIP 0.047MF		50V
C890	1-162-970-11	CERAMIC CHIP 0.01MF	10%	25V
C891	1-162-970-11	CERAMIC CHIP 0.01MF	10%	25V
C892	1-163-035-00	CERAMIC CHIP 0.047MF		50V
C893	1-162-974-11	CERAMIC CHIP 0.01MF		50V
C894	1-162-974-11	CERAMIC CHIP 0.01MF		50V
C897	1-164-227-11	CERAMIC CHIP 0.022MF	10%	25V
C901	1-162-958-11	CERAMIC CHIP 270PF	5%	50V
C902	1-162-974-11	CERAMIC CHIP 0.01MF		50V
C904	1-162-930-11	CERAMIC CHIP 1PF	0.25PF	50V
C905	1-162-939-11	CERAMIC CHIP 8PF	0.5PF	50V
C906	1-162-954-11	CERAMIC CHIP 120PF	5%	50V

Ref.No	Part No.	Description		Remark
C951	1-124-778-00	ELECT CHIP 22MF	20%	6.3V
C952	1-163-035-00	CERAMIC CHIP 0.047MF		50V
C953	1-162-974-11	CERAMIC CHIP 0.01MF		50V
C954	1-162-957-11	CERAMIC CHIP 220PF	5%	50V
C955	1-162-974-11	CERAMIC CHIP 0.01MF		50V
C956	1-163-035-00	CERAMIC CHIP 0.047MF		50V
C957	1-162-945-11	CERAMIC CHIP 22PF	5%	50V
C958	1-162-974-11	CERAMIC CHIP 0.01MF		50V
C959	1-135-180-21	TANTAL. CHIP 3.3MF	20%	4V
C960	1-162-946-11	CERAMIC CHIP 27PF	5%	50V
C961	1-162-974-11	CERAMIC CHIP 0.01MF		50V
C962	1-135-180-21	TANTAL. CHIP 3.3MF	20%	4V

CONNECTOR

CN801	1-566-516-11	CONNECTOR, FPC (ZIF) 16P
CN802	1-506-485-11	PIN, CONNECTOR 6P
CN803	*1-566-765-11	PIN, CONNECTOR (PC BOARD) 10P
CN804	*1-566-766-11	PIN, CONNECTOR (PC BOARD) 11P
CN805	*1-565-547-11	PIN, CONNECTOR (PC BOARD) 8P

DIODE

D801	8-719-123-85	DIODE 1SS304
D802	8-719-123-85	DIODE 1SS304
D804	8-719-800-76	DIODE 1SS226
D805	8-719-123-85	DIODE 1SS304
D806	8-719-123-85	DIODE 1SS304
D808	8-719-123-85	DIODE 1SS304
D809	8-719-123-85	DIODE 1SS304
D810	8-719-123-85	DIODE 1SS304
D811	8-719-800-76	DIODE 1SS226
D951	8-719-800-76	DIODE 1SS226

IC

IC801	8-759-209-17	IC TA8607F
IC802	8-759-925-60	IC BA401

COIL

L804	1-410-384-31	INDUCTOR CHIP	18UH
L805	1-410-384-31	INDUCTOR CHIP	18UH
L806	1-410-381-11	INDUCTOR CHIP	10UH
L807	1-410-381-11	INDUCTOR CHIP	10UH
L808	1-408-795-21	INDUCTOR CHIP	330UH
L809	1-410-167-41	INDUCTOR CHIP	820UH
L810	1-410-657-21	INDUCTOR CHIP	180UH
L811	1-410-379-21	INDUCTOR CHIP	6.8UH
L812	1-410-374-11	INDUCTOR CHIP	2.7UH
L813	1-410-379-21	INDUCTOR CHIP	6.8UH
L814	1-410-379-21	INDUCTOR CHIP	6.8UH
L815	1-410-384-31	INDUCTOR CHIP	18UH
L816	1-408-797-11	INDUCTOR CHIP	470UH
L817	1-408-797-11	INDUCTOR CHIP	470UH
L818	1-410-384-31	INDUCTOR CHIP	18UH

When indicating parts by reference number, please include the board name.

MR-19

Ref.No	Part No.	Description	Remark
L819	1-408-793-21	INDUCTOR CHIP 220UH	
L821	1-410-381-11	INDUCTOR CHIP 10UH	
L822	1-410-383-31	INDUCTOR CHIP 15UH	
L901	1-410-387-11	INDUCTOR CHIP 33UH	
L951	1-410-381-11	INDUCTOR CHIP 10UH	
L952	1-410-387-11	INDUCTOR CHIP 33UH	
L953	1-410-381-11	INDUCTOR CHIP 10UH	
L954	1-410-381-11	INDUCTOR CHIP 10UH	
		TRANSISTOR	
Q808	8-729-216-22	TRANSISTOR 2SA1162	
Q809	8-729-119-76	TRANSISTOR 2SA1175-HFE	
Q810	8-729-216-22	TRANSISTOR 2SA1162	
Q811	8-729-117-32	TRANSISTOR 2SC4177	
Q812	8-729-117-32	TRANSISTOR 2SC4177	
Q813	8-729-403-07	TRANSISTOR XN1213	
Q814	8-729-905-45	TRANSISTOR DTA143EU	
Q815	8-729-403-35	TRANSISTOR UN5113	
Q816	8-729-402-42	TRANSISTOR UN5213	
Q817	8-729-117-32	TRANSISTOR 2SC4177	
Q819	8-729-117-32	TRANSISTOR 2SC4177	
Q820	8-729-421-23	TRANSISTOR XN1501	
Q821	8-729-117-32	TRANSISTOR 2SC4177	
Q822	8-729-117-32	TRANSISTOR 2SC4177	
Q823	8-729-162-44	TRANSISTOR 2SB624-BV4	
Q824	8-729-402-42	TRANSISTOR UN5213	
Q825	8-729-403-07	TRANSISTOR XN1213	
Q826	8-729-403-35	TRANSISTOR UN5113	
Q827	8-729-402-42	TRANSISTOR UN5213	
Q828	8-729-402-42	TRANSISTOR UN5213	
Q831	8-729-102-07	TRANSISTOR 2SC2223-F13	
Q832	8-729-102-07	TRANSISTOR 2SC2223-F13	
Q833	8-729-202-38	TRANSISTOR 2SC3326N	
Q834	8-729-117-32	TRANSISTOR 2SC4177	
Q835	8-729-216-22	TRANSISTOR 2SA1162	
Q836	8-729-100-66	TRANSISTOR 2SC1623	
Q837	8-729-117-32	TRANSISTOR 2SC4177	
Q838	8-729-117-32	TRANSISTOR 2SC4177	
Q842	8-729-117-32	TRANSISTOR 2SC4177	
Q901	8-729-102-07	TRANSISTOR 2SC2223-F13	
Q902	8-729-402-42	TRANSISTOR UN5213	
Q951	8-729-402-81	TRANSISTOR XN4501	
Q952	8-729-117-32	TRANSISTOR 2SC4177	
Q953	8-729-140-63	TRANSISTOR 2SA1611-M5M6	
Q954	8-729-117-32	TRANSISTOR 2SC4177	
Q955	8-729-403-42	TRANSISTOR XN1401	
Q956	8-729-117-32	TRANSISTOR 2SC4177	
Q957	8-729-140-63	TRANSISTOR 2SA1611-M5M6	
Q958	8-729-117-32	TRANSISTOR 2SC4177	
Q959	8-729-402-42	TRANSISTOR UN5213	
		RESISTOR	
R817	1-216-829-11	METAL GLAZE 4.7K 5% 1/16W	

Ref.No	Part No.	Description	Remark
R818	1-216-825-11	METAL GLAZE 2.2K 5% 1/16W	
R819	1-216-805-11	METAL GLAZE 47 5% 1/16W	
R820	1-216-805-11	METAL GLAZE 47 5% 1/16W	
R821	1-216-818-11	METAL GLAZE 560 5% 1/16W	
R822	1-216-814-11	METAL GLAZE 270 5% 1/16W	
R823	1-216-813-11	METAL GLAZE 220 5% 1/16W	
R824	1-216-837-11	METAL GLAZE 22K 5% 1/16W	
R825	1-216-839-11	METAL GLAZE 33K 5% 1/16W	
R826	1-216-821-11	METAL GLAZE 1K 5% 1/16W	
R827	1-216-811-11	METAL GLAZE 150 5% 1/16W	
R828	1-216-833-11	METAL GLAZE 10K 5% 1/16W	
R829	1-216-833-11	METAL GLAZE 10K 5% 1/16W	
R830	1-216-833-11	METAL GLAZE 10K 5% 1/16W	
R831	1-216-833-11	METAL GLAZE 10K 5% 1/16W	
R832	1-216-824-11	METAL GLAZE 1.8K 5% 1/16W	
R834	1-216-818-11	METAL GLAZE 560 5% 1/16W	
R835	1-216-837-11	METAL GLAZE 22K 5% 1/16W	
R836	1-216-837-11	METAL GLAZE 22K 5% 1/16W	
R837	1-216-815-11	METAL GLAZE 330 5% 1/16W	
R838	1-216-817-11	METAL GLAZE 470 5% 1/16W	
R839	1-216-817-11	METAL GLAZE 470 5% 1/16W	
R840	1-216-815-11	METAL GLAZE 330 5% 1/16W	
R841	1-216-818-11	METAL GLAZE 560 5% 1/16W	
R842	1-216-833-11	METAL GLAZE 10K 5% 1/16W	
R843	1-216-840-11	METAL GLAZE 39K 5% 1/16W	
R844	1-216-821-11	METAL GLAZE 1K 5% 1/16W	
R845	1-216-825-11	METAL GLAZE 2.2K 5% 1/16W	
R846	1-216-833-11	METAL GLAZE 10K 5% 1/16W	
R847	1-216-833-11	METAL GLAZE 10K 5% 1/16W	
R848	1-216-829-11	METAL GLAZE 4.7K 5% 1/16W	
R849	1-216-818-11	METAL GLAZE 560 5% 1/16W	
R850	1-216-811-11	METAL GLAZE 150 5% 1/16W	
R852	1-216-822-11	METAL GLAZE 1.2K 5% 1/16W	
R853	1-216-840-11	METAL GLAZE 39K 5% 1/16W	
R854	1-216-834-11	METAL GLAZE 12K 5% 1/16W	
R855	1-216-815-11	METAL GLAZE 330 5% 1/16W	
R856	1-216-820-11	METAL GLAZE 820 5% 1/16W	
R857	1-216-833-11	METAL GLAZE 10K 5% 1/16W	
R858	1-216-833-11	METAL GLAZE 10K 5% 1/16W	
R859	1-216-821-11	METAL GLAZE 1K 5% 1/16W	
R861	1-216-831-11	METAL GLAZE 6.8K 5% 1/16W	
R862	1-216-838-11	METAL GLAZE 27K 5% 1/16W	
R865	1-216-837-11	METAL GLAZE 22K 5% 1/16W	
R866	1-216-822-11	METAL GLAZE 1.2K 5% 1/16W	
R867	1-216-814-11	METAL GLAZE 270 5% 1/16W	
R868	1-216-837-11	METAL GLAZE 22K 5% 1/16W	
R869	1-216-824-11	METAL GLAZE 1.8K 5% 1/16W	
R870	1-216-821-11	METAL GLAZE 1K 5% 1/16W	
R872	1-216-828-11	METAL GLAZE 3.9K 5% 1/16W	
R873	1-216-822-11	METAL GLAZE 1.2K 5% 1/16W	
R874	1-216-841-11	METAL GLAZE 47K 5% 1/16W	
R875	1-216-829-11	METAL GLAZE 4.7K 5% 1/16W	
R876	1-216-841-11	METAL GLAZE 47K 5% 1/16W	

When indicating parts by reference number, please include the board name.

Ref.No	Part No.	Description				Remark
R877	1-216-829-11	METAL GLAZE	4.7K	5%	1/16W	
R878	1-216-809-11	METAL GLAZE	100	5%	1/16W	
R885	1-216-839-11	METAL GLAZE	33K	5%	1/16W	
R886	1-216-835-11	METAL GLAZE	15K	5%	1/16W	
R887	1-216-818-11	METAL GLAZE	560	5%	1/16W	
R888	1-216-816-11	METAL GLAZE	390	5%	1/16W	
R889	1-216-817-11	METAL GLAZE	470	5%	1/16W	
R890	1-216-821-11	METAL GLAZE	1K	5%	1/16W	
R891	1-216-818-11	METAL GLAZE	560	5%	1/16W	
R894	1-216-812-11	METAL GLAZE	180	5%	1/16W	
R895	1-216-841-11	METAL GLAZE	47K	5%	1/16W	
R896	1-216-833-11	METAL GLAZE	10K	5%	1/16W	
R901	1-216-821-11	METAL GLAZE	1K	5%	1/16W	
R902	1-216-821-11	METAL GLAZE	1K	5%	1/16W	
R903	1-216-833-11	METAL GLAZE	10K	5%	1/16W	
R904	1-216-837-11	METAL GLAZE	22K	5%	1/16W	
R905	1-216-833-11	METAL GLAZE	10K	5%	1/16W	
R906	1-216-828-11	METAL GLAZE	3.9K	5%	1/16W	
R907	1-216-817-11	METAL GLAZE	470	5%	1/16W	
R908	1-216-836-11	METAL GLAZE	18K	5%	1/16W	
R909	1-216-833-11	METAL GLAZE	10K	5%	1/16W	
R910	1-216-823-11	METAL GLAZE	1.5K	5%	1/16W	
R911	1-216-809-11	METAL GLAZE	100	5%	1/16W	
R912	1-216-296-00	METAL GLAZE	0	5%	1/8W	
R913	1-216-809-11	METAL GLAZE	100	5%	1/16W	
R914	1-216-826-11	METAL GLAZE	2.7K	5%	1/16W	
R916	1-216-833-11	METAL GLAZE	10K	5%	1/16W	
R917	1-216-833-11	METAL GLAZE	10K	5%	1/16W	
R929	1-216-817-11	METAL GLAZE	470	5%	1/16W	
R930	1-216-831-11	METAL GLAZE	6.8K	5%	1/16W	
R931	1-216-827-11	METAL GLAZE	3.3K	5%	1/16W	
R943	1-216-864-11	METAL GLAZE	0	5%	1/16W	
R944	1-216-864-11	METAL GLAZE	0	5%	1/16W	
R946	1-216-841-11	METAL GLAZE	47K	5%	1/16W	
R947	1-216-829-11	METAL GLAZE	4.7K	5%	1/16W	
R949	1-216-820-11	METAL GLAZE	820	5%	1/16W	
R951	1-216-837-11	METAL GLAZE	22K	5%	1/16W	
R952	1-216-837-11	METAL GLAZE	22K	5%	1/16W	
R953	1-216-822-11	METAL GLAZE	1.2K	5%	1/16W	
R954	1-216-811-11	METAL GLAZE	150	5%	1/16W	
R955	1-216-822-11	METAL GLAZE	1.2K	5%	1/16W	
R956	1-216-820-11	METAL GLAZE	820	5%	1/16W	
R957	1-216-837-11	METAL GLAZE	22K	5%	1/16W	
R958	1-216-837-11	METAL GLAZE	22K	5%	1/16W	
R959	1-216-823-11	METAL GLAZE	1.5K	5%	1/16W	
R960	1-216-823-11	METAL GLAZE	1.5K	5%	1/16W	
R961	1-216-839-11	METAL GLAZE	33K	5%	1/16W	
R962	1-216-836-11	METAL GLAZE	18K	5%	1/16W	
R963	1-216-839-11	METAL GLAZE	33K	5%	1/16W	
R964	1-216-831-11	METAL GLAZE	6.8K	5%	1/16W	
R965	1-216-833-11	METAL GLAZE	10K	5%	1/16W	
R966	1-216-833-11	METAL GLAZE	10K	5%	1/16W	
R967	1-216-818-11	METAL GLAZE	560	5%	1/16W	
R968	1-216-835-11	METAL GLAZE	15K	5%	1/16W	
R969	1-216-837-11	METAL GLAZE	22K	5%	1/16W	
R970	1-216-839-11	METAL GLAZE	33K	5%	1/16W	
R971	1-216-841-11	METAL GLAZE	47K	5%	1/16W	

VARIABLE RESISTOR

RV802	1-230-869-11	RES, ADJ, METAL GLAZE 4.7K	
RV803	1-230-869-11	RES, ADJ, METAL GLAZE 4.7K	
RV805	1-230-868-11	RES, ADJ, METAL GLAZE 2.2K	
RV806	1-230-867-11	RES, ADJ, METAL GLAZE 1K	

****

*A-7061-982-A PJ-22 BOARD, COMPLETE (Ref.No 5,000 Series)
****

CAPACITOR

C901	1-162-638-11	CERAMIC CHIP	1MF		16V
C903	1-126-094-11	ELECT	4.7MF	20%	16V
C904	1-126-094-11	ELECT	4.7MF	20%	16V
C905	1-163-035-00	CERAMIC CHIP	0.047MF		50V
C906	1-162-638-11	CERAMIC CHIP	1MF		16V
C907	1-164-232-11	CERAMIC CHIP	0.01MF	10%	50V
C908	1-126-153-11	ELECT	22MF	20%	6.3V
C909	1-126-094-11	ELECT	4.7MF	20%	16V
C910	1-126-094-11	ELECT	4.7MF	20%	16V
C912	1-124-229-00	ELECT	33MF	20%	6.3V
C913	1-124-229-00	ELECT	33MF	20%	6.3V
C914	1-124-576-11	ELECT	220MF	20%	4V
C915	1-126-157-11	ELECT	10MF	20%	6.3V
C916	1-124-576-11	ELECT	220MF	20%	4V
C917	1-126-157-11	ELECT	10MF	20%	6.3V
C918	1-126-094-11	ELECT	4.7MF	20%	16V
C919	1-163-035-00	CERAMIC CHIP	0.047MF		50V
C920	1-126-153-11	ELECT	22MF	20%	6.3V
C921	1-126-153-11	ELECT	22MF	20%	6.3V
C923	1-126-094-11	ELECT	4.7MF	20%	16V
C924	1-163-107-00	CERAMIC CHIP	39PF	5%	50V
C925	1-163-034-00	CERAMIC CHIP	0.033MF		50V
C926	1-126-153-11	ELECT	22MF	20%	6.3V
C927	1-163-035-00	CERAMIC CHIP	0.047MF		50V
C928	1-163-033-00	CERAMIC CHIP	0.022MF		50V
C929	1-163-035-00	CERAMIC CHIP	0.047MF		50V
C930	1-163-035-00	CERAMIC CHIP	0.047MF		50V
C931	1-163-035-00	CERAMIC CHIP	0.047MF		50V
C932	1-163-035-00	CERAMIC CHIP	0.047MF		50V
C933	1-163-035-00	CERAMIC CHIP	0.047MF		50V
C934	1-163-035-00	CERAMIC CHIP	0.047MF		50V
C935	1-164-232-11	CERAMIC CHIP	0.01MF	10%	50V
C936	1-124-229-00	ELECT	.33MF	20%	6.3V

CONNECTOR

CN901	*1-566-765-11	PIN, CONNECTOR (PC BOARD) 10P
CN902	*1-566-761-11	PIN, CONNECTOR (PC BOARD) 6P

When indicating parts by reference number, please include the board name.

PJ-22

Ref.No	Part No.	Description	Remark
CN903	1-566-760-11	PIN, CONNECTOR (PC BOARD) 5P	
CN904	*1-563-308-11	CONNECTOR, BOARD TO BOARD 4P	
CN905	*1-566-763-11	PIN, CONNECTOR (PC BOARD) 8P	
		DIODE	
D903	8-719-106-43	DIODE RD9.1M-B1	
D904	8-719-106-43	DIODE RD9.1M-B1	
D905	8-719-106-43	DIODE RD9.1M-B1	
D906	8-719-106-43	DIODE RD9.1M-B1	
D907	8-719-106-43	DIODE RD9.1M-B1	
D908	8-719-106-43	DIODE RD9.1M-B1	
D909	8-719-106-43	DIODE RD9.1M-B1	
D910	8-719-106-43	DIODE RD9.1M-B1	
D911	8-719-106-43	DIODE RD9.1M-B1	
D912	8-719-106-43	DIODE RD9.1M-B1	
D919	8-719-400-18	DIODE MA152WK	
D920	8-719-400-18	DIODE MA152WK	
D921	8-719-400-18	DIODE MA152WK	
D922	8-719-400-18	DIODE MA152WK	
D923	8-719-400-18	DIODE MA152WK	
D924	8-719-400-18	DIODE MA152WK	
		IC	
IC901	8-752-009-51	IC CX20095A	
IC902	8-759-710-09	IC NJM2233AM	
		JACK	
J901	1-566-850-31	CONNECTOR, (S) TERMINAL 4P (S VIDEO INPUT)	
J902	1-569-368-11	JACK, PIN 3P (AUDIO L/R, VIDEO INPUT)	
J903	1-566-850-31	CONNECTOR, (S) TERMINAL 4P (S VIDEO OUTPUT)	
J904	1-537-142-21	TERMINAL BOARD (AUDIO/RFU DC OUT/VIDEO OUTPUT)	
J905	1-568-956-31	JACK, PIN 2P (AUDIO L/R OUTPUT)	
		COIL	
L903	1-410-820-41	INDUCTOR 10UH	
L907	1-410-808-41	INDUCTOR 1UH	
L908	1-410-828-41	INDUCTOR 47UH	
		TRANSISTOR	
Q901	8-729-216-22	TRANSISTOR 2SA1162	
Q904	8-729-901-01	TRANSISTOR DTC144EK	
Q905	8-729-100-66	TRANSISTOR 2SC1623	
Q906	8-729-100-66	TRANSISTOR 2SC1623	
Q907	8-729-100-66	TRANSISTOR 2SC1623	
Q908	8-729-271-22	TRANSISTOR 2SC2712G	
Q909	8-729-100-66	TRANSISTOR 2SC1623	
Q910	8-729-162-44	TRANSISTOR 2SB624-BV4	
Q911	8-729-901-01	TRANSISTOR DTC144EK	
Q912	8-729-901-01	TRANSISTOR DTC144EK	

Ref.No	Part No.	Description	Remark
Q913	8-729-901-01	TRANSISTOR DTC144EK	
Q914	8-729-119-76	TRANSISTOR 2SB1175-HFE	
Q915	8-729-100-66	TRANSISTOR 2SC1623	
Q917	8-729-901-01	TRANSISTOR DTC144EK	
Q918	8-729-901-01	TRANSISTOR DTC144EK	
Q919	8-729-216-22	TRANSISTOR 2SA1162	
Q921	8-729-901-01	TRANSISTOR DTC144EK	
Q922	8-729-100-66	TRANSISTOR 2SC1623	
Q923	8-729-100-66	TRANSISTOR 2SC1623	
Q925	8-729-216-22	TRANSISTOR 2SA1162	
Q932	8-729-901-06	TRANSISTOR DTA144EK	
Q933	8-729-901-01	TRANSISTOR DTC144EK	
		RESISTOR	
R901	1-216-059-00	METAL GLAZE 2.7K 5% 1/10W	
R902	1-216-041-00	METAL GLAZE 470 5% 1/10W	
R903	1-216-059-00	METAL GLAZE 2.7K 5% 1/10W	
R904	1-216-041-00	METAL GLAZE 470 5% 1/10W	
R905	1-216-055-00	METAL GLAZE 1.8K 5% 1/10W	
R906	1-216-051-00	METAL GLAZE 1.2K 5% 1/10W	
R907	1-216-295-00	METAL GLAZE 0 5% 1/10W	
R908	1-216-071-00	METAL GLAZE 8.2K 5% 1/10W	
R909	1-216-053-00	METAL GLAZE 1.5K 5% 1/10W	
R910	1-216-015-00	METAL GLAZE 39 5% 1/10W	
R911	1-216-015-00	METAL GLAZE 39 5% 1/10W	
R912	1-216-015-00	METAL GLAZE 39 5% 1/10W	
R913	1-216-015-00	METAL GLAZE 39 5% 1/10W	
R914	1-216-021-00	METAL GLAZE 68 5% 1/10W	
R915	1-216-021-00	METAL GLAZE 68 5% 1/10W	
R916	1-216-021-00	METAL GLAZE 68 5% 1/10W	
R919	1-216-049-00	METAL GLAZE 1K 5% 1/10W	
R921	1-216-049-00	METAL GLAZE 1K 5% 1/10W	
R923	1-216-049-00	METAL GLAZE 1K 5% 1/10W	
R924	1-216-049-00	METAL GLAZE 1K 5% 1/10W	
R925	1-216-057-00	METAL GLAZE 2.2K 5% 1/10W	
R926	1-216-073-00	METAL GLAZE 10K 5% 1/10W	
R927	1-216-069-00	METAL GLAZE 6.8K 5% 1/10W	
R928	1-216-073-00	METAL GLAZE 10K 5% 1/10W	
R929	1-216-073-00	METAL GLAZE 10K 5% 1/10W	
R930	1-216-049-00	METAL GLAZE 1K 5% 1/10W	
R931	1-216-039-00	METAL GLAZE 390 5% 1/10W	
R932	1-216-049-00	METAL GLAZE 1K 5% 1/10W	
R933	1-216-039-00	METAL GLAZE 390 5% 1/10W	
R934	1-216-041-00	METAL GLAZE 470 5% 1/10W	
R935	1-216-033-00	METAL GLAZE 220 5% 1/10W	
R936	1-216-043-00	METAL GLAZE 560 5% 1/10W	
R937	1-216-033-00	METAL GLAZE 220 5% 1/10W	
R938	1-216-021-00	METAL GLAZE 68 5% 1/10W	
R939	1-216-037-00	METAL GLAZE 330 5% 1/10W	
R940	1-216-041-00	METAL GLAZE 470 5% 1/10W	
R941	1-216-051-00	METAL GLAZE 1.2K 5% 1/10W	
R942	1-216-051-00	METAL GLAZE 1.2K 5% 1/10W	
R943	1-216-081-00	METAL GLAZE 22K 5% 1/10W	

When indicating parts by reference number, please include the board name.

Ref.No	Part No.	Description				Remark
R944	1-216-075-00	METAL GLAZE	12K	5%	1/10W	
R945	1-216-089-00	METAL GLAZE	47K	5%	1/10W	
R946	1-216-055-00	METAL GLAZE	1.8K	5%	1/10W	
R947	1-216-081-00	METAL GLAZE	22K	5%	1/10W	
R948	1-216-081-00	METAL GLAZE	22K	5%	1/10W	
R949	1-216-081-00	METAL GLAZE	22K	5%	1/10W	
R950	1-216-073-00	METAL GLAZE	10K	5%	1/10W	
R951	1-216-138-00	METAL GLAZE	3.3	5%	1/8W	
R952	1-216-067-00	METAL GLAZE	5.6K	5%	1/10W	
R953	1-216-047-00	METAL GLAZE	820	5%	1/10W	
R954	1-216-079-00	METAL GLAZE	18K	5%	1/10W	
R955	1-216-296-00	METAL GLAZE	0	5%	1/8W	
R956	1-216-296-00	METAL GLAZE	0	5%	1/8W	
R957	1-216-296-00	METAL GLAZE	0	5%	1/8W	
R958	1-216-296-00	METAL GLAZE	0	5%	1/8W	
R960	1-216-049-00	METAL GLAZE	1K	5%	1/10W	
R961	1-216-049-00	METAL GLAZE	1K	5%	1/10W	
R963	1-216-295-00	METAL GLAZE	0	5%	1/10W	
R964	1-216-097-00	METAL GLAZE	100K	5%	1/10W	
R965	1-216-073-00	METAL GLAZE	10K	5%	1/10W	
R966	1-216-049-00	METAL GLAZE	1K	5%	1/10W	
R968	1-216-025-00	METAL GLAZE	100	5%	1/10W	
R972	1-216-295-00	METAL GLAZE	0	5%	1/10W	

VARIABLE RESISTOR

RV901	1-230-868-11	RES, ADJ, METAL GLAZE 2.2K	
RV902	1-230-868-11	RES, ADJ, METAL GLAZE 2.2K	
RV903	1-230-866-11	RES, ADJ, METAL GLAZE 470	

SWITCH

SW901	1-571-102-11	SWITCH, SLIDE (EJECT)	
SW902	1-554-945-12	SWITCH, SLIDE (AUDIO Hi-Fi/DIGITAL/MONITOR MIX)	

****

*A-7030-171-A AF-DM ASSY (DM-23 BOARD, COMPLETE)
****
(Ref.No 1,000 Series)

CAPACITOR

C550	1-162-974-11	CERAMIC CHIP	0.01MF		50V
C553	1-163-038-00	CERAMIC CHIP	0.1MF		25V
C554	1-124-778-00	ELECT CHIP	22MF	20%	6.3V
C555	1-164-161-11	CERAMIC CHIP	0.0022MF	10%	50V
C556	1-163-037-11	CERAMIC CHIP	0.022MF	10%	25V
C557	1-162-974-11	CERAMIC CHIP	0.01MF		50V
C558	1-163-037-11	CERAMIC CHIP	0.022MF	10%	25V
C559	1-124-779-00	ELECT CHIP	10MF	20%	16V
C560	1-163-038-00	CERAMIC CHIP	0.1MF		25V
C562	1-162-964-11	CERAMIC CHIP	0.001MF	10%	50V
C563	1-162-637-11	CERAMIC CHIP	0.47MF		16V
C565	1-163-075-00	CERAMIC CHIP	0.047MF	10%	25V
C566	1-164-156-11	CERAMIC CHIP	0.1MF		25V
C567	1-135-155-21	TANTAL. CHIP	4.7MF	20%	16V
C568	1-162-970-11	CERAMIC CHIP	0.01MF	10%	25V
C569	1-162-970-11	CERAMIC CHIP	0.01MF	10%	25V
C570	1-162-970-11	CERAMIC CHIP	0.01MF	10%	25V

CONNECTOR

CN550	1-506-467-11	PIN, CONNECTOR 2P	
CN551	*1-565-542-11	PIN, CONNECTOR (PC BOARD) 3P	
CN552	1-563-585-11	CONNECTOR, FLEXIBLE 8P	
CN553	*1-565-541-11	PIN, CONNECTOR (PC BOARD) 2P	
CN554	*1-565-541-11	PIN, CONNECTOR (PC BOARD) 2P	

DIODE

D550	8-719-404-46	DIODE MA110

IC

IC551	8-759-100-94	IC UPC358G2
IC552	8-759-981-82	IC RC3414M
IC553	8-759-231-23	IC TK10500M
IC554	8-759-030-35	IC MPC1725M

COIL

L551	1-410-381-11	INDUCTOR CHIP 10UH

TRANSISTOR

Q550	8-729-402-84	TRANSISTOR XN4601
Q551	8-729-805-25	TRANSISTOR 2SB1121
Q552	8-729-905-35	TRANSISTOR 2SC4081-R
Q555	8-729-905-35	TRANSISTOR 2SC4081-R
Q556	8-729-905-23	TRANSISTOR 2SA1576-R
Q557	8-729-907-00	TRANSISTOR DTC114EU
Q561	8-729-901-03	TRANSISTOR DTC144WK
Q562	8-729-402-78	TRANSISTOR XN6401
Q563	8-729-402-78	TRANSISTOR XN6401
Q564	8-729-402-42	TRANSISTOR UN5213
Q568	8-729-402-84	TRANSISTOR XN4601

RESISTOR

R550	1-216-830-11	METAL GLAZE	5.6K	5%	1/16W
R551	1-216-830-11	METAL GLAZE	5.6K	5%	1/16W
R552	1-216-831-11	METAL GLAZE	6.8K	5%	1/16W
R553	1-216-840-11	METAL GLAZE	39K	5%	1/16W
R554	1-216-134-00	METAL GLAZE	2.2	5%	1/8W
R555	1-216-838-11	METAL GLAZE	27K	5%	1/16W
R556	1-216-838-11	METAL GLAZE	27K	5%	1/16W
R569	1-216-134-00	METAL GLAZE	2.2	5%	1/8W
R570	1-216-833-11	METAL GLAZE	10K	5%	1/16W
R571	1-216-821-11	METAL GLAZE	1K	5%	1/16W
R572	1-216-821-11	METAL GLAZE	1K	5%	1/16W
R573	1-216-843-11	METAL GLAZE	68K	5%	1/16W
R574	1-216-144-00	METAL GLAZE	5.6	5%	1/8W
R575	1-216-857-11	METAL GLAZE	1M	5%	1/16W
R576	1-216-847-11	METAL GLAZE	150K	5%	1/16W

When indicating parts by reference number, please include the board name.

DM-23 FD-13

Ref.No	Part No.	Description				Remark
R577	1-216-835-11	METAL GLAZE	15K	5%	1/16W	
R578	1-216-826-11	METAL GLAZE	2.7K	5%	1/16W	
R579	1-216-830-11	METAL GLAZE	5.6K	5%	1/16W	
R580	1-216-834-11	METAL GLAZE	12K	5%	1/16W	
R581	1-216-833-11	METAL GLAZE	10K	5%	1/16W	
R582	1-216-833-11	METAL GLAZE	10K	5%	1/16W	
R583	1-216-837-11	METAL GLAZE	22K	5%	1/16W	
R584	1-216-826-11	METAL GLAZE	2.7K	5%	1/16W	
R585	1-216-840-11	METAL GLAZE	39K	5%	1/16W	
R587	1-216-833-11	METAL GLAZE	10K	5%	1/16W	
R588	1-216-823-11	METAL GLAZE	1.5K	5%	1/16W	
R594	1-216-864-11	METAL GLAZE	0	5%	1/16W	
R595	1-216-823-11	METAL GLAZE	1.5K	5%	1/16W	
R596	1-216-864-11	METAL GLAZE	0	5%	1/16W	
R597	1-216-857-11	METAL GLAZE	1M	5%	1/16W	
R598	1-216-864-11	METAL GLAZE	0	5%	1/16W	
R601	1-216-837-11	METAL GLAZE	22K	5%	1/16W	
R604	1-216-833-11	METAL GLAZE	10K	5%	1/16W	
R605	1-216-826-11	METAL GLAZE	2.7K	5%	1/16W	
R606	1-216-835-11	METAL GLAZE	15K	5%	1/16W	
R607	1-216-835-11	METAL GLAZE	15K	5%	1/16W	
R608	1-216-833-11	METAL GLAZE	10K	5%	1/16W	
R609	1-216-828-11	METAL GLAZE	3.9K	5%	1/16W	

VARIABLE RESISTOR

RV551	1-230-875-21	RES, ADJ, METAL GLAZE 220K

****

*A-7062-059-A FD-13 BOARD, COMPLETE (Ref.No 7,000 Series)
****

*3-674-372-00 HOLDER (A), LED
*3-742-775-01 HOLDER, LCD

CAPACITOR

C211	1-124-584-00	ELECT	100MF	20%	10V
C212	1-163-038-00	CERAMIC CHIP	0.1MF		25V
C213	1-124-225-00	ELECT	100MF	20%	6.3V
C214	1-163-038-00	CERAMIC CHIP	0.1MF		25V
C215	1-124-257-00	ELECT	2.2MF	20%	35V
C216	1-126-157-11	ELECT	10MF	20%	6.3V
C217	1-126-100-11	ELECT	10MF	20%	6.3V
C218	1-163-101-00	CERAMIC CHIP	22PF	5%	50V
C220	1-163-038-00	CERAMIC CHIP	0.1MF		25V
C221	1-124-257-00	ELECT	2.2MF	20%	35V
C222	1-126-100-11	ELECT	10MF	20%	6.3V
C223	1-163-101-00	CERAMIC CHIP	22PF	5%	50V
C224	1-163-038-00	CERAMIC CHIP	0.1MF		25V
C226	1-163-009-11	CERAMIC CHIP	0.001MF	10%	50V
C227	1-163-009-11	CERAMIC CHIP	0.001MF	10%	50V
C228	1-163-009-11	CERAMIC CHIP	0.001MF	10%	50V
C229	1-163-009-11	CERAMIC CHIP	0.001MF	10%	50V
C230	1-163-038-00	CERAMIC CHIP	0.1MF		25V
C242	1-124-225-00	ELECT	100MF	20%	6.3V
C243	1-126-157-11	ELECT	10MF	20%	6.3V
C244	1-163-038-00	CERAMIC CHIP	0.1MF		25V

CONNECTOR

CN203	*1-566-765-11	PIN, CONNECTOR (PC BOARD) 10P
CN205	*1-566-197-11	PIN, CONNECTOR (PC BOARD) 4P
CN206	*1-566-767-11	PIN, CONNECTOR (PC BOARD) 12P
CN208	*1-565-875-11	PIN, CONNECTOR (PC BOARD) 3P
CN209	*1-566-185-11	PIN, CONNECTOR (PC BOARD) 6P
CN211	1-566-536-11	CONNECTOR, FPC (ZIF) 20P
CN212	1-565-212-11	CONNECTOR, FPC (ZIF) 26P
CN214	1-565-528-11	PIN, CONNECTOR (PC BOARD) 3P

DIODE

D201	8-719-812-43	DIODE TLG124A (DIGITAL)
D202	8-719-951-22	DIODE IMN10
D203	8-719-940-45	DIODE DWA010
D204	8-719-940-45	DIODE DWA010
D205	8-719-951-22	DIODE IMN10
D206	8-719-951-22	DIODE IMN10
D207	8-719-404-46	DIODE MA110
D208	8-719-404-46	DIODE MA110
D210	8-719-940-45	DIODE DWA010
D211	8-719-404-46	DIODE MA110
D212	8-719-938-68	DIODE GL-3HY8 (Hi-Fi)

IC

IC211	8-759-603-27	IC M5201FP
IC212	8-759-603-27	IC M5201FP
IC213	8-759-981-82	IC RC3414M

DISPLAY PANEL

ND201	1-808-932-11	DISPLAY PANEL, LIQUID CRYSTAL

TRANSISTOR

Q201	8-729-920-39	TRANSISTOR IMT1US
Q202	8-729-805-25	TRANSISTOR 2SB1121
Q211	8-729-903-30	TRANSISTOR DTC144TK
Q212	8-729-903-30	TRANSISTOR DTC144TK

RESISTOR

R201	1-216-138-00	METAL GLAZE	3.3	5%	1/8W
R202	1-216-063-00	METAL GLAZE	3.9K	5%	1/10W
R203	1-216-051-00	METAL GLAZE	1.2K	5%	1/10W
R204	1-216-069-00	METAL GLAZE	6.8K	5%	1/10W
R205	1-216-057-00	METAL GLAZE	2.2K	5%	1/10W
R206	1-216-138-00	METAL GLAZE	3.3	5%	1/8W
R211	1-216-097-00	METAL GLAZE	100K	5%	1/10W
R213	1-216-097-00	METAL GLAZE	100K	5%	1/10W
R214	1-216-097-00	METAL GLAZE	100K	5%	1/10W
R215	1-216-097-00	METAL GLAZE	100K	5%	1/10W

When indicating parts by reference number, please include the board name.

Ref.No	Part No.	Description				Remark
R216	1-216-097-00	METAL GLAZE	100K	5%	1/10W	
R217	1-216-097-00	METAL GLAZE	100K	5%	1/10W	
R218	1-216-061-00	METAL GLAZE	3.3K	5%	1/10W	
R220	1-216-097-00	METAL GLAZE	100K	5%	1/10W	
R222	1-216-295-00	METAL GLAZE	0	5%	1/10W	
R224	1-216-061-00	METAL GLAZE	3.3K	5%	1/10W	
R225	1-216-097-00	METAL GLAZE	100K	5%	1/10W	
R226	1-216-295-00	METAL GLAZE	0	5%	1/10W	
		SWITCH				
S201	1-571-787-11	SWITCH, TACTILE (DATE)				
S202	1-571-787-11	SWITCH, TACTILE (TIME)				
S203	1-571-787-11	SWITCH, TACTILE (COUNTER RESET)				
S204	1-571-787-11	SWITCH, TACTILE (ZERO MEM)				
S205	1-553-977-51	SWITCH, SLIDE (AUTO LOCK)				
S206	1-553-977-00	SWITCH, SLIDE (FOCUS)				
S207	1-571-787-11	SWITCH, TACTILE (PUSH AUTO)				
S208	1-570-871-11	SWITCH, SLIDE (SENS)				
S209	1-571-361-21	SWITCH, ROTARY (WHT BAL)				
S210	1-571-787-11	SWITCH, TACTILE (◺◿)				
S211	1-571-361-11	SWITCH, ROTARY (SHUTTER SPEED)				
S212	1-571-787-11	SWITCH, TACTILE (STOROBO)				
S213	1-571-787-11	SWITCH, TACTILE (ART)				
S214	1-571-787-11	SWITCH, TACTILE (NR)				
S215	1-571-361-21	SWITCH, ROTARY (EFFECT SELECT)				
S216	1-572-087-11	SWITCH, TACT (INDEX MARK)				
S220	1-553-977-00	SWITCH, SLIDE (MIC)				
		TERMINAL PIN				
TP201	*1-535-622-11	PIN, TERMINAL				
TP202	*1-535-622-11	PIN, TERMINAL				
TP203	*1-535-622-11	PIN, TERMINAL				
TP204	*1-535-622-11	PIN, TERMINAL				
		VARIABLE RESISTOR				
VR201	1-237-776-21	RES, VAR, CARBON 10K (IRIS)				
VR211	1-238-882-11	RES, VAR, CARBON 22K/22K (REC LEVEL)				
VR212	1-238-881-11	RES, VAR, CARBON 47K/47K (BALANCE)				

****

*A-7062-060-A VF-13 BOARD, COMPLETE (Ref.No 1,000 Series)
****

		CAPACITOR			
C901	1-126-369-11	ELECT	220MF	20%	6.3V
C902	1-163-038-00	CERAMIC CHIP	0.1MF		25V
C904	1-127-515-11	ELECT(SOLID)	47MF	20%	6.3V
C905	1-163-009-11	CERAMIC CHIP	0.001MF	10%	50V
C906	1-163-115-00	CERAMIC CHIP	82PF	5%	50V
C907	⚠1-162-625-11	CERAMIC CHIP	0.0047MF	5%	50V
C908	⚠1-163-015-91	CERAMIC CHIP	0.0033MF	10%	50V
C909	1-126-603-11	ELECT CHIP	4.7MF	20%	35V
C911	1-131-388-00	TANTALUM	68MF	10%	3.15V
C912	1-102-038-00	CERAMIC	0.001MF		500V
C913	1-163-033-00	CERAMIC CHIP	0.022MF		50V
C915	1-126-193-11	ELECT CHIP	1MF	20%	50V
C916	1-163-037-11	CERAMIC CHIP	0.022MF	10%	25V
C917	1-135-166-21	TANTAL. CHIP	47MF	20%	6.3V
C918	1-162-638-11	CERAMIC CHIP	1MF		16V
C919	1-135-070-00	TANTAL. CHIP	0.1MF	10%	35V
C920	1-164-232-11	CERAMIC CHIP	0.01MF	10%	50V
		CONNECTOR			
CN901	*1-566-195-21	PIN, CONNECTOR (PC BOARD) 2P			
CN902	*1-566-195-11	PIN, CONNECTOR (PC BOARD) 2P			
CN904	*1-566-197-11	PIN, CONNECTOR (PC BOARD) 4P			
		CONPOSITION CIRCUIT BLOCK			
CP901	1-238-119-11	RES, ADJ			
		SOCKET ASSY			
CRT901	1-526-978-21	SOCKET ASSY, CRT			
		DIODE			
D903	8-719-400-20	DIODE MA152WA			
		IC			
IC901	8-759-420-01	IC AN2512S			
		COIL			
L901	1-408-421-00	INDUCTOR	100UH		
L902	1-410-384-31	INDUCTOR CHIP	18UH		
L903	⚠1-459-858-11	COIL, FERRITE (HLC)			
		TRANSISTOR			
Q902	⚠8-729-402-31	TRANSISTOR 2SD1819A			
Q903	8-729-106-68	TRANSISTOR 2SD1615-A			
Q904	8-729-216-31	TRANSISTOR 2SA1163G			
		RESISTOR			
R902	1-216-051-00	METAL GLAZE	1.2K	5%	1/10W
R903	1-216-041-00	METAL GLAZE	470	5%	1/10W
R904	⚠1-216-073-00	METAL GLAZE	10K	5%	1/10W
R906	⚠1-216-051-00	METAL GLAZE	1.2K	5%	1/10W
R907	1-216-063-00	METAL GLAZE	3.9K	5%	1/10W
R908	1-216-063-00	METAL GLAZE	3.9K	5%	1/10W
R909	1-216-065-00	METAL GLAZE	4.7K	5%	1/10W
R911	1-216-083-00	METAL GLAZE	27K	5%	1/10W
R912	1-216-130-11	METAL GLAZE	2.4M	5%	1/10W
R913	1-216-295-00	METAL GLAZE	0	5%	1/10W
R914	1-216-133-00	METAL GLAZE	3.3M	5%	1/10W
R915	1-216-133-00	METAL GLAZE	3.3M	5%	1/10W
R916	1-216-121-00	METAL GLAZE	1M	5%	1/10W
R917	1-216-121-00	METAL GLAZE	1M	5%	1/10W
R919	1-216-097-00	METAL GLAZE	100K	5%	1/10W

The components identified by mark ⚠ or dotted line with mark ⚠ are critical for safety.
Replace only with part number specified.

Les composants identifiés par une marque ⚠ sont critiques pour la sécurité.
Ne les remplacer que par une pièce portant le numéro spécifié.

When indicating parts by reference number, please include the board name.

VF-13 VC-54

Ref.No	Part No.	Description				Remark
R920	1-216-113-00	METAL GLAZE	470K	5%	1/10W	
R921	1-216-013-00	METAL GLAZE	33	5%	1/10W	
R922	1-216-055-00	METAL GLAZE	1.8K	5%	1/10W	
R923	1-216-025-00	METAL GLAZE	100	5%	1/10W	
R924	1-216-306-11	METAL GLAZE	3.9	5%	1/10W	
R925	1-216-336-11	METAL GLAZE	47K	1%	1/10W	
R926	1-218-163-11	METAL GLAZE	120K	1%	1/10W	
R928	1-216-870-11	METAL GLAZE	180K	1%	1/10W	
R929	1-216-053-00	METAL GLAZE	1.5K	5%	1/10W	
R930	1-216-089-00	METAL GLAZE	47K	5%	1/10W	
R931	1-216-121-00	METAL GLAZE	1M	5%	1/10W	
		VARIABLE RESISTOR				
RV901	1-230-203-00	RES, ADJ, METAL GLAZE 2.2M				
		TRANSFORMER				
T901 ⚠	1-439-481-11	TRANSFORMER ASSY, FLYBACK				
		THERMISTOR				
TH901	1-807-938-11	THERMISTOR				

****

*A-7062-068-A	VC-54 BOARD, COMPLETE (Ref.No 1,000 Series)		
	**********		
A-7068-143-A	DT-73 (HIC) BOARD, COMPLETE		
1-574-480-11	CABLE, FLAT (1.0MM PITCH) 34P		
1-574-856-11	CABLE, FLAT (1.0MM PITCH) 20P		
1-574-878-11	WIRE, FLAT TYPE PVC (16 CORE)		

CAPACITOR

C221	1-162-970-11	CERAMIC CHIP	0.01MF	10%	25V
C222	1-124-778-00	ELECT CHIP	22MF	20%	6.3V
C223	1-162-970-11	CERAMIC CHIP	0.01MF	10%	25V
C224	1-162-970-11	CERAMIC CHIP	0.01MF	10%	25V
C225	1-126-204-11	ELECT CHIP	47MF	20%	16V
C226	1-124-778-00	ELECT CHIP	22MF	20%	6.3V
C227	1-126-204-11	ELECT CHIP	47MF	20%	16V
C228	1-162-970-11	CERAMIC CHIP	0.01MF	10%	25V
C229	1-135-092-21	TANTAL. CHIP	3.3MF	20%	16V
C230	1-162-970-11	CERAMIC CHIP	0.01MF	10%	25V
C231	1-162-970-11	CERAMIC CHIP	0.01MF	10%	25V
C232	1-162-970-11	CERAMIC CHIP	0.01MF	10%	25V
C234	1-162-964-11	CERAMIC CHIP	0.001MF	10%	50V
C235	1-126-602-11	ELECT CHIP	3.3MF	20%	50V
C236	1-163-036-00	CERAMIC CHIP	0.068MF		50V
C237	1-126-400-11	ELECT CHIP	22MF	20%	35V
C238	1-135-089-21	TANTAL. CHIP	6.8MF	20%	20V
C239	1-162-962-11	CERAMIC CHIP	470PF	10%	50V
C241	1-162-919-11	CERAMIC CHIP	22PF	5%	50V
C242	1-126-205-11	ELECT CHIP	47MF	20%	6.3V
C243	1-135-181-21	TANTAL. CHIP	4.7MF	20%	6.3V
C244	1-162-974-11	CERAMIC CHIP	0.01MF		50V

Ref.No	Part No.	Description			Remark
C245	1-162-970-11	CERAMIC CHIP	0.01MF	10%	25V
C246	1-126-204-11	ELECT CHIP	47MF	20%	16V
C258	1-163-036-00	CERAMIC CHIP	0.068MF		50V
C261	1-162-970-11	CERAMIC CHIP	0.01MF	10%	25V
C262	1-162-964-11	CERAMIC CHIP	0.001MF	10%	50V
C263	1-162-945-11	CERAMIC CHIP	22PF	5%	50V
C264	1-162-970-11	CERAMIC CHIP	0.01MF	10%	25V
C265	1-162-945-11	CERAMIC CHIP	22PF	5%	50V
C266	1-162-949-11	CERAMIC CHIP	47PF	5%	50V
C267	1-162-949-11	CERAMIC CHIP	47PF	5%	50V
C268	1-162-970-11	CERAMIC CHIP	0.01MF	10%	25V
C269	1-163-809-11	CERAMIC CHIP	0.047MF	10%	25V
C271	1-162-970-11	CERAMIC CHIP	0.01MF	10%	25V
C272	1-135-156-21	TANTAL. CHIP	6.8MF	20%	10V
C273	1-162-970-11	CERAMIC CHIP	0.01MF	10%	25V
C279	1-162-945-11	CERAMIC CHIP	22PF	5%	50V
C283	1-162-949-11	CERAMIC CHIP	47PF	5%	50V
C285	1-162-949-11	CERAMIC CHIP	47PF	5%	50V
C287	1-162-949-11	CERAMIC CHIP	47PF	5%	50V
C288	1-162-949-11	CERAMIC CHIP	47PF	5%	50V
C290	1-162-949-11	CERAMIC CHIP	47PF	5%	50V
C291	1-162-949-11	CERAMIC CHIP	47PF	5%	50V
C292	1-162-949-11	CERAMIC CHIP	47PF	5%	50V
C293	1-162-949-11	CERAMIC CHIP	47PF	5%	50V
C294	1-162-949-11	CERAMIC CHIP	47PF	5%	50V
C295	1-135-091-00	TANTAL. CHIP	1MF	20%	16V

CONNECTOR

CN221	1-568-112-11	CONNECTOR, BOARD TO BOARD 6P
CN222	*1-566-181-11	PIN, CONNECTOR (PC BOARD) 2P

DIODE

D222	8-719-404-49	DIODE MA111
D223	8-719-404-49	DIODE MA111
D224	8-719-404-49	DIODE MA111
D225	8-719-404-49	DIODE MA111

FILTER

FL221	1-236-368-11	LPF (YH)
FL222	1-415-634-21	DL (LC)

IC

IC261	8-752-326-08	IC CXD1159Q

COIL

L221	1-412-031-11	INDUCTOR CHIP	47UH
L222	1-412-034-21	INDUCTOR CHIP	330UH
L223	1-410-192-51	INDUCTOR CHIP	1UH
L224	1-412-032-11	INDUCTOR CHIP	100UH
L225	1-410-192-51	INDUCTOR CHIP	1UH
L226	1-410-192-51	INDUCTOR CHIP	1UH
L227	1-410-192-51	INDUCTOR CHIP	1UH

The components identified by mark ⚠ or dotted line with mark ⚠ are critical for safety.
Replace only with part number specified.

Les composants identifiés par une marque ⚠ sont critiques pour la sécurité.
Ne les remplacer que par une pièce portant le numéro spécifé.

When indicating parts by reference number, please include the board name.

Ref.No	Part No.	Description	Remark
L228	1-410-192-51	INDUCTOR CHIP 1UH	
L229	1-410-192-51	INDUCTOR CHIP 1UH	
L230	1-412-029-11	INDUCTOR CHIP 10UH	
L262	1-410-204-31	INDUCTOR CHIP 10UH	
L263	1-410-192-51	INDUCTOR CHIP 1UH	
		TRANSISTOR	
Q221	8-729-809-88	TRANSISTOR 2SA1416-S	
Q222	8-729-810-01	TRANSISTOR 2SC3646-S	
Q223	8-729-402-84	TRANSISTOR XN4601	
Q224	8-729-905-23	TRANSISTOR 2SA1576	
Q225	8-729-402-84	TRANSISTOR XN4601	
Q226	8-729-402-84	TRANSISTOR XN4601	
Q227	8-729-402-84	TRANSISTOR XN4601	
Q228	8-729-402-84	TRANSISTOR XN4601	
Q229	8-729-402-84	TRANSISTOR XN4601	
Q230	8-729-905-23	TRANSISTOR 2SA1576	
Q260	8-729-905-35	TRANSISTOR 2SC4081-R	
		RESISTOR	
R189	1-216-864-11	METAL GLAZE 0 5% 1/16W	
R195	1-216-821-11	METAL GLAZE 1K 5% 1/16W	
R199	1-216-820-11	METAL GLAZE 820 5% 1/16W	
R221	1-216-864-11	METAL GLAZE 0 5% 1/16W	
R223	1-216-864-11	METAL GLAZE 0 5% 1/16W	
R225	1-216-845-11	METAL GLAZE 100K 5% 1/16W	
R226	1-216-845-11	METAL GLAZE 100K 5% 1/16W	
R227	1-216-833-11	METAL GLAZE 10K 5% 1/16W	
R228	1-216-833-11	METAL GLAZE 10K 5% 1/16W	
R229	1-216-839-11	METAL GLAZE 33K 5% 1/16W	
R230	1-216-837-11	METAL GLAZE 22K 5% 1/16W	
R231	1-216-005-00	METAL GLAZE 15 5% 1/10W	
R232	1-216-005-00	METAL GLAZE 15 5% 1/10W	
R233	1-216-827-11	METAL GLAZE 3.3K 5% 1/16W	
R234	1-216-827-11	METAL GLAZE 3.3K 5% 1/16W	
R235	1-216-821-11	METAL GLAZE 1K 5% 1/16W	
R236	1-216-829-11	METAL GLAZE 4.7K 5% 1/16W	
R237	1-216-821-11	METAL GLAZE 1K 5% 1/16W	
R238	1-216-821-11	METAL GLAZE 1K 5% 1/16W	
R239	1-216-833-11	METAL GLAZE 10K 5% 1/16W	
R241	1-216-820-11	METAL GLAZE 820 5% 1/16W	
R242	1-216-839-11	METAL GLAZE 33K 5% 1/16W	
R243	1-216-833-11	METAL GLAZE 10K 5% 1/16W	
R245	1-216-822-11	METAL GLAZE 1.2K 5% 1/16W	
R246	1-216-081-00	METAL GLAZE 22K 5% 1/10W	
R247	1-216-673-11	METAL CHIP 8.2K 0.50% 1/10W	
R248	1-216-068-00	METAL GLAZE 6.2K 5% 1/10W	
R249	1-216-827-11	METAL GLAZE 3.3K 5% 1/16W	
R250	1-216-833-11	METAL GLAZE 10K 5% 1/16W	
R251	1-216-683-11	METAL CHIP 22K 0.50% 1/10W	
R252	1-216-689-11	METAL CHIP 39K 0.50% 1/10W	
R253	1-216-837-11	METAL GLAZE 22K 5% 1/16W	
R254	1-216-837-11	METAL GLAZE 22K 5% 1/16W	

Ref.No	Part No.	Description	Remark
R255	1-216-841-11	METAL GLAZE 47K 5% 1/16W	
R256	1-216-842-11	METAL GLAZE 56K 5% 1/16W	
R257	1-216-843-11	METAL GLAZE 68K 5% 1/16W	
R258	1-216-832-11	METAL GLAZE 8.2K 5% 1/16W	
R259	1-216-837-11	METAL GLAZE 22K 5% 1/16W	
R260	1-216-841-11	METAL GLAZE 47K 5% 1/16W	
R261	1-216-809-11	METAL GLAZE 100 5% 1/16W	
R262	1-216-864-11	METAL GLAZE 0 5% 1/16W	
R265	1-216-864-11	METAL GLAZE 0 5% 1/16W	
R266	1-216-825-11	METAL GLAZE 2.2K 5% 1/16W	
R267	1-216-864-11	METAL GLAZE 0 5% 1/16W	
R268	1-216-825-11	METAL GLAZE 2.2K 5% 1/16W	
R269	1-216-825-11	METAL GLAZE 2.2K 5% 1/16W	
R270	1-216-825-11	METAL GLAZE 2.2K 5% 1/16W	
R271	1-216-864-11	METAL GLAZE 0 5% 1/16W	
R272	1-216-825-11	METAL GLAZE 2.2K 5% 1/16W	
R273	1-216-825-11	METAL GLAZE 2.2K 5% 1/16W	
R274	1-216-813-11	METAL GLAZE 220 5% 1/16W	
R275	1-216-848-11	METAL GLAZE 180K 5% 1/16W	
R276	1-216-864-11	METAL GLAZE 0 5% 1/16W	
R278	1-216-825-11	METAL GLAZE 2.2K 5% 1/16W	
R279	1-216-825-11	METAL GLAZE 2.2K 5% 1/16W	
R280	1-216-864-11	METAL GLAZE 0 5% 1/16W	
R291	1-216-864-11	METAL GLAZE 0 5% 1/16W	
R292	1-216-825-11	METAL GLAZE 2.2K 5% 1/16W	
R293	1-216-843-11	METAL GLAZE 68K 5% 1/16W	
R294	1-216-835-11	METAL GLAZE 15K 5% 1/16W	
R295	1-216-825-11	METAL GLAZE 2.2K 5% 1/16W	
R296	1-216-813-11	METAL GLAZE 220 5% 1/16W	
R297	1-216-809-11	METAL GLAZE 100 5% 1/16W	
R298	1-216-825-11	METAL GLAZE 2.2K 5% 1/16W	
R299	1-216-833-11	METAL GLAZE 10K 5% 1/16W	
R300	1-216-835-11	METAL GLAZE 15K 5% 1/16W	
R477	1-216-864-11	METAL GLAZE 0 5% 1/16W	
R478	1-216-864-11	METAL GLAZE 0 5% 1/16W	
		CRYSTAL	
X221	1-567-898-11	OSCILLATOR, CRYSTAL	

****

*A-7062-069-A VC-55 BOARD, COMPLETE (Ref.No 2,000 Series)
****

A-7068-144-A MX-7 (HIC) BOARD, COMPLETE

A-7068-145-A CP-20 (HIC) BOARD, COMPLETE

		CAPACITOR			
C301	1-135-091-00	TANTAL. CHIP 1MF	20%	16V	
C302	1-164-156-11	CERAMIC CHIP 0.1MF		25V	
C303	1-126-206-11	ELECT CHIP 100MF	20%	6.3V	
C304	1-162-970-11	CERAMIC CHIP 0.01MF	10%	25V	
C305	1-162-942-11	CERAMIC CHIP 12PF	5%	50V	
C306	1-162-970-11	CERAMIC CHIP 0.01MF	10%	25V	
C307	1-162-970-11	CERAMIC CHIP 0.01MF	10%	25V	
C308	1-126-206-11	ELECT CHIP 100MF	20%	6.3V	
C309	1-164-156-11	CERAMIC CHIP 0.1MF		25V	

When indicating parts by reference number, please include the board name.

VC-55

Ref.No	Part No.	Description		Remark
C310	1-162-970-11	CERAMIC CHIP 0.01MF	10%	25V
C311	1-162-920-11	CERAMIC CHIP 27PF	5%	50V
C312	1-162-970-11	CERAMIC CHIP 0.01MF	10%	25V
C313	1-162-970-11	CERAMIC CHIP 0.01MF	10%	25V
C314	1-126-205-11	ELECT CHIP 47MF	20%	6.3V
C316	1-162-943-11	CERAMIC CHIP 15PF	5%	50V
C317	1-164-156-11	CERAMIC CHIP 0.1MF		25V
C318	1-162-638-11	CERAMIC CHIP 1MF		16V
C319	1-164-156-11	CERAMIC CHIP 0.1MF		25V
C320	1-162-949-11	CERAMIC CHIP 47PF	5%	50V
C330	1-162-970-11	CERAMIC CHIP 0.01MF	10%	25V
C331	1-135-180-21	TANTAL. CHIP 3.3MF	20%	6.3V
C332	1-162-970-11	CERAMIC CHIP 0.01MF	10%	25V
C333	1-135-180-21	TANTAL. CHIP 3.3MF	20%	6.3V
C334	1-164-156-11	CERAMIC CHIP 0.1MF		25V
C335	1-135-157-21	TANTAL. CHIP 10MF	20%	6.3V
C336	1-135-072-21	TANTAL. CHIP 0.22MF	20%	35V
C337	1-162-970-11	CERAMIC CHIP 0.01MF	10%	25V
C338	1-135-180-21	TANTAL. CHIP 3.3MF	20%	6.3V
C339	1-135-180-21	TANTAL. CHIP 3.3MF	20%	6.3V
C340	1-135-180-21	TANTAL. CHIP 3.3MF	20%	6.3V
C341	1-164-156-11	CERAMIC CHIP 0.1MF		25V
C342	1-162-949-11	CERAMIC CHIP 47PF	5%	50V
C343	1-162-949-11	CERAMIC CHIP 47PF	5%	50V
C400	1-164-156-11	CERAMIC CHIP 0.1MF		25V
C401	1-164-005-11	CERAMIC CHIP 0.47MF		25V
C402	1-162-915-11	CERAMIC CHIP 10PF	0.5PF	50V
C403	1-164-156-11	CERAMIC CHIP 0.1MF		25V
C404	1-135-091-00	TANTAL. CHIP 1MF	20%	16V
C405	1-164-156-11	CERAMIC CHIP 0.1MF		25V
C406	1-164-156-11	CERAMIC CHIP 0.1MF		25V
C407	1-162-974-11	CERAMIC CHIP 0.01MF		50V
C408	1-162-974-11	CERAMIC CHIP 0.01MF		50V
C409	1-162-974-11	CERAMIC CHIP 0.01MF		50V
C410	1-162-974-11	CERAMIC CHIP 0.01MF		50V
C411	1-135-091-00	TANTAL. CHIP 1MF	20%	16V
C412	1-162-638-11	CERAMIC CHIP 1MF		16V
C413	1-164-156-11	CERAMIC CHIP 0.1MF		25V
C414	1-164-156-11	CERAMIC CHIP 0.1MF		25V
C415	1-124-566-11	ELECT 120MF	20%	6.3V
C416	1-162-920-11	CERAMIC CHIP 27PF	5%	50V
C417	1-162-970-11	CERAMIC CHIP 0.01MF	10%	25V
C418	1-162-970-11	CERAMIC CHIP 0.01MF	10%	25V
C419	1-164-156-11	CERAMIC CHIP 0.1MF		25V
C420	1-164-156-11	CERAMIC CHIP 0.1MF		25V
C421	1-162-974-11	CERAMIC CHIP 0.01MF		50V
C422	1-162-964-11	CERAMIC CHIP 0.001MF	10%	50V
C424	1-162-915-11	CERAMIC CHIP 10PF	0.5PF	50V
C425	1-164-005-11	CERAMIC CHIP 0.47MF		25V
C429	1-162-970-11	CERAMIC CHIP 0.01MF	10%	25V
C430	1-135-180-21	TANTAL. CHIP 3.3MF	20%	6.3V
C431	1-162-926-11	CERAMIC CHIP 82PF	5%	50V
C432	1-162-919-11	CERAMIC CHIP 22PF	5%	50V

Ref.No	Part No.	Description		Remark
C433	1-162-916-11	CERAMIC CHIP 12PF	5%	50V
C434	1-124-778-00	ELECT CHIP 22MF	20%	6.3V
C435	1-162-970-11	CERAMIC CHIP 0.01MF	10%	25V
C436	1-162-974-11	CERAMIC CHIP 0.01MF		50V
C437	1-135-149-21	TANTAL. CHIP 2.2MF	20%	10V
C438	1-162-970-11	CERAMIC CHIP 0.01MF	10%	25V
C439	1-162-949-11	CERAMIC CHIP 47PF	5%	50V
C440	1-162-949-11	CERAMIC CHIP 47PF	5%	50V
C446	1-162-949-11	CERAMIC CHIP 47PF	5%	50V
C447	1-162-949-11	CERAMIC CHIP 47PF	5%	50V
C448	1-162-970-11	CERAMIC CHIP 0.01MF	10%	25V
C449	1-162-970-11	CERAMIC CHIP 0.01MF	10%	25V

CONNECTOR

CN301	*1-565-876-11	PIN, CONNECTOR (PC BOARD) 4P	

DIODE

D312	8-719-404-34	DIODE MA141WA	
D313	8-719-404-46	DIODE MA110	
D314	8-719-104-34	DIODE 1S2836	

FILTER

FL301	1-236-187-11	FILTER, LOW PASS	
FL302	1-236-190-11	FILTER, LOW PASS	
FL303	1-236-192-11	FILTER, LOW PASS	
FL304	1-236-196-11	LPF	
FL305	1-415-635-21	DL (LC)	
FL306	1-415-638-11	DL, LC	

IC

IC301	8-759-031-88	IC MC68HC05N4FU	
IC302	8-759-106-23	IC UPD4066BG	
IC303	8-759-100-95	IC UPC324G2	
IC304	8-752-033-70	IC CXA1072R	
IC305	8-759-946-00	IC MB88341PFV	
IC306	8-759-101-12	IC UPC311G2	

COIL

L301	1-412-029-11	INDUCTOR CHIP	10UH
L302	1-410-204-31	INDUCTOR CHIP	10UH
L341	1-410-215-31	INDUCTOR CHIP	82UH
L344	1-410-204-31	INDUCTOR CHIP	10UH
L345	1-410-180-51	INDUCTOR CHIP	0.1UH

TRANSISTOR

Q300	8-729-905-35	TRANSISTOR 2SC4081	
Q301	8-729-402-78	TRANSISTOR XN6401	
Q302	8-729-905-35	TRANSISTOR 2SC4081	
Q303	8-729-905-35	TRANSISTOR 2SC4081	
Q304	8-729-905-35	TRANSISTOR 2SC4081	
Q305	8-729-905-35	TRANSISTOR 2SC4081	
Q306	8-729-905-23	TRANSISTOR 2SA1576	

When indicating parts by reference number, please include the board name.

Ref.No	Part No.	Description	Remark
Q307	8-729-905-35	TRANSISTOR 2SC4081	
Q308	8-729-905-35	TRANSISTOR 2SC4081	
Q321	8-729-905-99	TRANSISTOR DTC114TU	
Q322	8-729-403-10	TRANSISTOR XN6215	
Q323	8-729-403-07	TRANSISTOR XN1213	
Q324	8-729-905-35	TRANSISTOR 2SC4081	
Q325	8-729-905-35	TRANSISTOR 2SC4081	
Q326	8-729-403-10	TRANSISTOR XN6215	
Q327	8-729-402-78	TRANSISTOR XN6401	
Q351	8-729-905-23	TRANSISTOR 2SA1576	
Q352	8-729-905-23	TRANSISTOR 2SA1576	
Q354	8-729-905-35	TRANSISTOR 2SC4081	
Q355	8-729-402-84	TRANSISTOR XN4601	
Q356	8-729-403-10	TRANSISTOR XN6215	
Q358	8-729-905-35	TRANSISTOR 2SC4081	
Q359	8-729-905-35	TRANSISTOR 2SC4081	
Q360	8-729-905-35	TRANSISTOR 2SC4081	
Q361	8-729-402-84	TRANSISTOR XN4601	

RESISTOR

Ref.No	Part No.	Description			Remark
R301	1-216-832-11	METAL GLAZE	8.2K	5% 1/16W	
R302	1-216-822-11	METAL GLAZE	1.2K	5% 1/16W	
R303	1-216-833-11	METAL GLAZE	10K	5% 1/16W	
R304	1-216-833-11	METAL GLAZE	10K	5% 1/16W	
R305	1-216-837-11	METAL GLAZE	22K	5% 1/16W	
R306	1-216-833-11	METAL GLAZE	10K	5% 1/16W	
R307	1-216-821-11	METAL GLAZE	1K	5% 1/16W	
R308	1-216-821-11	METAL GLAZE	1K	5% 1/16W	
R309	1-216-825-11	METAL GLAZE	2.2K	5% 1/16W	
R310	1-216-821-11	METAL GLAZE	1K	5% 1/16W	
R311	1-216-833-11	METAL GLAZE	10K	5% 1/16W	
R312	1-216-835-11	METAL GLAZE	15K	5% 1/16W	
R313	1-216-834-11	METAL GLAZE	12K	5% 1/16W	
R314	1-216-834-11	METAL GLAZE	12K	5% 1/16W	
R315	1-216-835-11	METAL GLAZE	15K	5% 1/16W	
R316	1-216-840-11	METAL GLAZE	39K	5% 1/16W	
R317	1-216-839-11	METAL GLAZE	33K	5% 1/16W	
R319	1-216-840-11	METAL GLAZE	39K	5% 1/16W	
R320	1-216-835-11	METAL GLAZE	15K	5% 1/16W	
R321	1-216-839-11	METAL GLAZE	33K	5% 1/16W	
R322	1-216-864-11	METAL GLAZE	0	5% 1/16W	
R323	1-216-864-11	METAL GLAZE	0	5% 1/16W	
R324	1-216-821-11	METAL GLAZE	1K	5% 1/16W	
R325	1-216-821-11	METAL GLAZE	1K	5% 1/16W	
R326	1-216-831-11	METAL GLAZE	6.8K	5% 1/16W	
R328	1-216-821-11	METAL GLAZE	1K	5% 1/16W	
R330	1-216-864-11	METAL GLAZE	0	5% 1/16W	
R332	1-216-864-11	METAL GLAZE	0	5% 1/16W	
R333	1-216-821-11	METAL GLAZE	1K	5% 1/16W	
R334	1-216-818-11	METAL GLAZE	560	5% 1/16W	
R335	1-216-837-11	METAL GLAZE	22K	5% 1/16W	
R336	1-216-821-11	METAL GLAZE	1K	5% 1/16W	
R337	1-216-825-11	METAL GLAZE	2.2K	5% 1/16W	
R338	1-216-821-11	METAL GLAZE	1K	5% 1/16W	
R339	1-216-821-11	METAL GLAZE	1K	5% 1/16W	
R340	1-216-827-11	METAL GLAZE	3.3K	5% 1/16W	
R341	1-216-823-11	METAL GLAZE	1.5K	5% 1/16W	
R342	1-216-839-11	METAL GLAZE	33K	5% 1/16W	
R343	1-216-821-11	METAL GLAZE	1K	5% 1/16W	
R344	1-216-830-11	METAL GLAZE	5.6K	5% 1/16W	
R345	1-216-851-11	METAL GLAZE	330K	5% 1/16W	
R346	1-216-825-11	METAL GLAZE	2.2K	5% 1/16W	
R347	1-216-864-11	METAL GLAZE	0	5% 1/16W	
R350	1-216-833-11	METAL GLAZE	10K	5% 1/16W	
R351	1-216-833-11	METAL GLAZE	10K	5% 1/16W	
R352	1-216-833-11	METAL GLAZE	10K	5% 1/16W	
R353	1-216-833-11	METAL GLAZE	10K	5% 1/16W	
R355	1-216-833-11	METAL GLAZE	10K	5% 1/16W	
R356	1-216-833-11	METAL GLAZE	10K	5% 1/16W	
R357	1-216-833-11	METAL GLAZE	10K	5% 1/16W	
R358	1-216-857-11	METAL GLAZE	1M	5% 1/16W	
R359	1-216-864-11	METAL GLAZE	0	5% 1/16W	
R360	1-216-840-11	METAL GLAZE	39K	5% 1/16W	
R361	1-216-833-11	METAL GLAZE	10K	5% 1/16W	
R362	1-216-847-11	METAL GLAZE	150K	5% 1/16W	
R363	1-216-833-11	METAL GLAZE	10K	5% 1/16W	
R364	1-216-845-11	METAL GLAZE	100K	5% 1/16W	
R365	1-216-845-11	METAL GLAZE	100K	5% 1/16W	
R366	1-216-845-11	METAL GLAZE	100K	5% 1/16W	
R367	1-216-833-11	METAL GLAZE	10K	5% 1/16W	
R368	1-216-833-11	METAL GLAZE	10K	5% 1/16W	
R369	1-216-833-11	METAL GLAZE	10K	5% 1/16W	
R370	1-216-833-11	METAL GLAZE	10K	5% 1/16W	
R371	1-216-837-11	METAL GLAZE	22K	5% 1/16W	
R372	1-216-825-11	METAL GLAZE	2.2K	5% 1/16W	
R373	1-216-823-11	METAL GLAZE	1.5K	5% 1/16W	
R374	1-216-845-11	METAL GLAZE	100K	5% 1/16W	
R375	1-216-833-11	METAL GLAZE	10K	5% 1/16W	
R381	1-216-836-11	METAL GLAZE	18K	5% 1/16W	
R382	1-216-838-11	METAL GLAZE	27K	5% 1/16W	
R384	1-216-677-11	METAL CHIP	12K	0.50% 1/10W	
R385	1-216-816-11	METAL GLAZE	390	5% 1/16W	
R386	1-216-825-11	METAL GLAZE	2.2K	5% 1/16W	
R387	1-216-823-11	METAL GLAZE	1.5K	5% 1/16W	
R388	1-216-844-11	METAL GLAZE	82K	5% 1/16W	
R389	1-216-844-11	METAL GLAZE	82K	5% 1/16W	
R390	1-216-846-11	METAL GLAZE	120K	5% 1/16W	
R391	1-216-864-11	METAL GLAZE	0	5% 1/16W	
R394	1-216-845-11	METAL GLAZE	100K	5% 1/16W	
R395	1-216-836-11	METAL GLAZE	18K	5% 1/16W	
R396	1-216-830-11	METAL GLAZE	5.6K	5% 1/16W	
R397	1-216-837-11	METAL GLAZE	22K	5% 1/16W	
R398	1-216-835-11	METAL GLAZE	15K	5% 1/16W	
R399	1-216-840-11	METAL GLAZE	39K	5% 1/16W	
R404	1-216-821-11	METAL GLAZE	1K	5% 1/16W	
R405	1-216-821-11	METAL GLAZE	1K	5% 1/16W	

When indicating parts by reference number, please include the board name.

VC-55 AF-47

Ref.No	Part No.	Description				Remark
R406	1-216-821-11	METAL GLAZE	1K	5%	1/16W	
R407	1-216-824-11	METAL GLAZE	1.8K	5%	1/16W	
R408	1-216-827-11	METAL GLAZE	3.3K	5%	1/16W	
R409	1-216-853-11	METAL GLAZE	470K	5%	1/16W	
R410	1-216-828-11	METAL GLAZE	3.9K	5%	1/16W	
R411	1-216-829-11	METAL GLAZE	4.7K	5%	1/16W	
R412	1-216-864-11	METAL GLAZE	0	5%	1/16W	
R413	1-216-833-11	METAL GLAZE	10K	5%	1/16W	
R414	1-216-828-11	METAL GLAZE	3.9K	5%	1/16W	
R415	1-216-841-11	METAL GLAZE	47K	5%	1/16W	
R416	1-216-842-11	METAL GLAZE	56K	5%	1/16W	
R417	1-216-842-11	METAL GLAZE	56K	5%	1/16W	
R418	1-216-821-11	METAL GLAZE	1K	5%	1/16W	
R419	1-216-813-11	METAL GLAZE	220	5%	1/16W	
R420	1-216-813-11	METAL GLAZE	220	5%	1/16W	
R421	1-216-813-11	METAL GLAZE	220	5%	1/16W	
R422	1-216-813-11	METAL GLAZE	220	5%	1/16W	
R423	1-216-840-11	METAL GLAZE	39K	5%	1/16W	
R424	1-216-833-11	METAL GLAZE	10K	5%	1/16W	
R425	1-216-834-11	METAL GLAZE	12K	5%	1/16W	
R426	1-216-825-11	METAL GLAZE	2.2K	5%	1/16W	
R427	1-216-833-11	METAL GLAZE	10K	5%	1/16W	
R428	1-216-813-11	METAL GLAZE	220	5%	1/16W	
R429	1-216-813-11	METAL GLAZE	220	5%	1/16W	
R430	1-216-813-11	METAL GLAZE	220	5%	1/16W	
R431	1-216-813-11	METAL GLAZE	220	5%	1/16W	
R432	1-216-833-11	METAL GLAZE	10K	5%	1/16W	
R433	1-216-813-11	METAL GLAZE	220	5%	1/16W	
R434	1-216-813-11	METAL GLAZE	220	5%	1/16W	
R435	1-216-134-00	METAL GLAZE	2.2	5%	1/8W	
R436	1-216-813-11	METAL GLAZE	220	5%	1/16W	
R439	1-216-864-11	METAL GLAZE	0	5%	1/16W	
R440	1-216-841-11	METAL GLAZE	47K	5%	1/16W	
R441	1-216-841-11	METAL GLAZE	47K	5%	1/16W	
R442	1-216-839-11	METAL GLAZE	33K	5%	1/16W	
R443	1-216-818-11	METAL GLAZE	560	5%	1/16W	
R444	1-216-837-11	METAL GLAZE	22K	5%	1/16W	
R445	1-216-833-11	METAL GLAZE	10K	5%	1/16W	
R446	1-216-833-11	METAL GLAZE	10K	5%	1/16W	
R447	1-216-833-11	METAL GLAZE	10K	5%	1/16W	
R448	1-216-833-11	METAL GLAZE	10K	5%	1/16W	
R449	1-216-841-11	METAL GLAZE	47K	5%	1/16W	
R450	1-216-841-11	METAL GLAZE	47K	5%	1/16W	

TERMINAL PIN

TP301	*1-535-622-11	PIN, TERMINAL	
TP302	*1-535-622-11	PIN, TERMINAL	

FLEXIBLE BOARD

W302	1-633-615-11	FP-239	FLEXIBLE BOARD

Ref.No	Part No.	Description		Remark
		CRYSTAL		
X301	1-577-118-11	VIBRATOR, LITHIUM NIOBATE		
		**********		
	*A-7030-171-A	AF-DM ASSY (AF-47 BOARD, COMPLETE)		
		**********		
		(Ref.No 3,000 Series)		
		CAPACITOR		
C451	1-162-638-11	CERAMIC CHIP 1MF		16V
C452	1-162-974-11	CERAMIC CHIP 0.01MF		50V
C453	1-135-180-21	TANTAL. CHIP 3.3MF	20%	6.3V
C454	1-164-156-11	CERAMIC CHIP 0.1MF		25V
C455	1-162-974-11	CERAMIC CHIP 0.01MF		50V
C456	1-162-964-11	CERAMIC CHIP 0.001MF	10%	50V
C457	1-135-180-21	TANTAL. CHIP 3.3MF	20%	6.3V
C458	1-162-974-11	CERAMIC CHIP 0.01MF		50V
C459	1-162-974-11	CERAMIC CHIP 0.01MF		50V
C460	1-162-974-11	CERAMIC CHIP 0.01MF		50V
C461	1-162-957-11	CERAMIC CHIP 220PF	5%	50V
C462	1-162-957-11	CERAMIC CHIP 220PF	5%	50V
C463	1-162-926-11	CERAMIC CHIP 82PF	5%	50V
C464	1-162-974-11	CERAMIC CHIP 0.01MF		50V
C465	1-164-156-11	CERAMIC CHIP 0.1MF		25V
C466	1-164-156-11	CERAMIC CHIP 0.1MF		25V
C467	1-162-974-11	CERAMIC CHIP 0.01MF		50V
C470	1-164-156-11	CERAMIC CHIP 0.1MF		25V
C471	1-164-156-11	CERAMIC CHIP 0.1MF		25V
C472	1-135-157-21	TANTAL. CHIP 10MF	20%	6.3V
C473	1-135-145-11	TANTAL. CHIP 0.47MF	20%	25V
C474	1-162-974-11	CERAMIC CHIP 0.01MF		50V
C475	1-164-156-11	CERAMIC CHIP 0.1MF		25V
C477	1-162-941-11	CERAMIC CHIP 10PF	0.5PF	50V
C478	1-162-964-11	CERAMIC CHIP 0.001MF	10%	50V
C479	1-162-974-11	CERAMIC CHIP 0.01MF		50V
C480	1-162-970-11	CERAMIC CHIP 0.01MF	10%	25V
C481	1-162-964-11	CERAMIC CHIP 0.001MF	10%	50V
C482	1-162-964-11	CERAMIC CHIP 0.001MF	10%	50V
C483	1-164-156-11	CERAMIC CHIP 0.1MF		25V
C484	1-135-157-21	TANTAL. CHIP 10MF	20%	6.3V
C485	1-135-145-11	TANTAL. CHIP 0.47MF	20%	25V
C487	1-164-156-11	CERAMIC CHIP 0.1MF		25V
C490	1-162-957-11	CERAMIC CHIP 220PF	5%	50V
C491	1-162-928-11	CERAMIC CHIP 120PF	5%	50V
C492	1-135-177-21	TANTAL. CHIP 1MF	20%	20V
C493	1-164-156-11	CERAMIC CHIP 0.1MF		25V
C494	1-162-966-11	CERAMIC CHIP 0.0022MF	10%	50V
C495	1-164-156-11	CERAMIC CHIP 0.1MF		25V
C496	1-126-395-11	ELECT CHIP 22MF	20%	16V
C498	1-164-156-11	CERAMIC CHIP 0.1MF		25V

When indicating parts by reference number, please include the board name.

Ref.No	Part No.	Description	Remark
		CONNECTOR	
CN451	1-566-536-11	CONNECTOR, FPC (ZIF) 20P	
CN452	*1-565-542-11	PIN, CONNECTOR (PC BOARD) 3P	
CN453	*1-565-542-21	PIN, CONNECTOR (PC BOARD) 3P	
CN454	*1-563-582-11	CONNECTOR, FLEXIBLE 5P	
CN455	*1-565-543-11	PIN, CONNECTOR (PC BOARD) 4P	
CN456	*1-565-541-11	PIN, CONNECTOR (PC BOARD) 2P	
		DIODE	
D451	8-719-404-46	DIODE MA110	
D454	8-719-404-46	DIODE MA110	
D455	8-719-404-32	DIODE MA141WA	
		FILTER	
FL451	1-236-209-11	FILTER, LOW PASS	
		IC	
IC451	8-752-326-18	IC CXD1204R	
IC452	8-759-031-76	IC MC68HC05C4-SC403774	
IC453	8-759-971-93	IC MSM6219GS-VK	
IC454	8-759-946-00	IC MB88341PFV	
IC455	8-759-100-95	IC UPC324G2	
IC456	8-759-937-56	IC S-8054ALB-LM	
IC457	8-759-103-25	IC UPD4053BG	
IC458	8-759-979-41	IC LM358PS	
IC459	8-759-030-74	IC SC14S66F	
		COIL	
L451	1-410-381-11	INDUCTOR CHIP 10UH	
L452	1-410-655-31	INDUCTOR CHIP 120UH	
		TRANSISTOR	
Q451	8-729-403-10	TRANSISTOR XN6215	
Q452	8-729-905-35	TRANSISTOR 2SC4081	
Q453	8-729-905-35	TRANSISTOR 2SC4081	
Q454	8-729-905-35	TRANSISTOR 2SC4081	
Q455	8-729-402-19	TRANSISTOR XN6501	
Q456	8-729-402-84	TRANSISTOR XN4601	
Q459	8-729-905-23	TRANSISTOR 2SA1576-R	
Q463	8-729-905-35	TRANSISTOR 2SC4081	
Q464	8-729-905-35	TRANSISTOR 2SC4081	
Q468	8-729-905-23	TRANSISTOR 2SA1576-R	
Q469	8-729-402-84	TRANSISTOR XN4601	
		RESISTOR	
R453	1-216-833-11	METAL GLAZE 10K 5% 1/16W	
R454	1-216-833-11	METAL GLAZE 10K 5% 1/16W	
R455	1-216-833-11	METAL GLAZE 10K 5% 1/16W	
R456	1-216-833-11	METAL GLAZE 10K 5% 1/16W	
R458	1-216-833-11	METAL GLAZE 10K 5% 1/16W	
R459	1-216-835-11	METAL GLAZE 15K 5% 1/16W	
R460	1-216-838-11	METAL GLAZE 27K 5% 1/16W	
R461	1-216-842-11	METAL GLAZE 56K 5% 1/16W	
R462	1-216-845-11	METAL GLAZE 100K 5% 1/16W	
R463	1-216-849-11	METAL GLAZE 220K 5% 1/16W	
R464	1-216-832-11	METAL GLAZE 8.2K 5% 1/16W	
R465	1-216-833-11	METAL GLAZE 10K 5% 1/16W	
R466	1-216-819-11	METAL GLAZE 680 5% 1/16W	
R467	1-216-844-11	METAL GLAZE 82K 5% 1/16W	
R468	1-216-864-11	METAL GLAZE 0 5% 1/16W	
R469	1-216-821-11	METAL GLAZE 1K 5% 1/16W	
R470	1-216-837-11	METAL GLAZE 22K 5% 1/16W	
R471	1-216-825-11	METAL GLAZE 2.2K 5% 1/16W	
R472	1-216-839-11	METAL GLAZE 33K 5% 1/16W	
R473	1-216-845-11	METAL GLAZE 100K 5% 1/16W	
R474	1-216-840-11	METAL GLAZE 39K 5% 1/16W	
R480	1-216-829-11	METAL GLAZE 4.7K 5% 1/16W	
R481	1-216-829-11	METAL GLAZE 4.7K 5% 1/16W	
R482	1-216-841-11	METAL GLAZE 47K 5% 1/16W	
R483	1-216-685-11	METAL CHIP 27K 0.50% 1/10W	
R484	1-216-675-11	METAL CHIP 10K 0.50% 1/10W	
R485	1-216-675-11	METAL CHIP 10K 0.50% 1/10W	
R488	1-216-833-11	METAL GLAZE 10K 5% 1/16W	
R489	1-216-833-11	METAL GLAZE 10K 5% 1/16W	
R491	1-216-833-11	METAL GLAZE 10K 5% 1/16W	
R493	1-216-864-11	METAL GLAZE 0 5% 1/16W	
R494	1-216-833-11	METAL GLAZE 10K 5% 1/16W	
R495	1-216-841-11	METAL GLAZE 47K 5% 1/16W	
R496	1-216-841-11	METAL GLAZE 47K 5% 1/16W	
R497	1-216-837-11	METAL GLAZE 22K 5% 1/16W	
R498	1-216-845-11	METAL GLAZE 100K 5% 1/16W	
R499	1-216-845-11	METAL GLAZE 100K 5% 1/16W	
R500	1-216-857-11	METAL GLAZE 1M 5% 1/16W	
R501	1-216-857-11	METAL GLAZE 1M 5% 1/16W	
R502	1-216-857-11	METAL GLAZE 1M 5% 1/16W	
R503	1-216-833-11	METAL GLAZE 10K 5% 1/16W	
R504	1-216-828-11	METAL GLAZE 3.9K 5% 1/16W	
R505	1-216-829-11	METAL GLAZE 4.7K 5% 1/16W	
R506	1-216-857-11	METAL GLAZE 1M 5% 1/16W	
R507	1-216-828-11	METAL GLAZE 3.9K 5% 1/16W	
R508	1-216-864-11	METAL GLAZE 0 5% 1/16W	
R509	1-216-857-11	METAL GLAZE 1M 5% 1/16W	
R510	1-216-839-11	METAL GLAZE 33K 5% 1/16W	
R512	1-216-849-11	METAL GLAZE 220K 5% 1/16W	
R513	1-216-847-11	METAL GLAZE 150K 5% 1/16W	
R514	1-216-854-11	METAL GLAZE 560K 5% 1/16W	
R515	1-216-833-11	METAL GLAZE 10K 5% 1/16W	
R517	1-216-841-11	METAL GLAZE 47K 5% 1/16W	
R518	1-216-841-11	METAL GLAZE 47K 5% 1/16W	
R519	1-216-842-11	METAL GLAZE 56K 5% 1/16W	
R520	1-216-834-11	METAL GLAZE 12K 5% 1/16W	
R521	1-216-826-11	METAL GLAZE 2.7K 5% 1/16W	
R522	1-216-825-11	METAL GLAZE 2.2K 5% 1/16W	
R523	1-216-818-11	METAL GLAZE 560 5% 1/16W	

When indicating parts by reference number, please include the board name.

AF-47 DI-21

Ref.No	Part No.	Description				Remark
R524	1-216-827-11	METAL GLAZE	3.3K	5%	1/16W	
R525	1-216-830-11	METAL GLAZE	5.6K	5%	1/16W	
R526	1-216-821-11	METAL GLAZE	1K	5%	1/16W	
R527	1-216-842-11	METAL GLAZE	56K	5%	1/16W	
R528	1-216-837-11	METAL GLAZE	22K	5%	1/16W	
R529	1-216-837-11	METAL GLAZE	22K	5%	1/16W	
R531	1-216-134-00	METAL GLAZE	2.2	5%	1/8W	
R532	1-216-144-00	METAL GLAZE	5.6	5%	1/8W	
R533	1-216-845-11	METAL GLAZE	100K	5%	1/16W	
R534	1-216-841-11	METAL GLAZE	47K	5%	1/16W	
R537	1-216-813-11	METAL GLAZE	220	5%	1/16W	
R538	1-216-813-11	METAL GLAZE	220	5%	1/16W	
R540	1-216-813-11	METAL GLAZE	220	5%	1/16W	
R541	1-216-820-11	METAL GLAZE	820	5%	1/16W	
R542	1-216-831-11	METAL GLAZE	6.8K	5%	1/16W	
R543	1-216-830-11	METAL GLAZE	5.6K	5%	1/16W	
R544	1-216-827-11	METAL GLAZE	3.3K	5%	1/16W	
R545	1-216-818-11	METAL GLAZE	560	5%	1/16W	
R546	1-216-833-11	METAL GLAZE	10K	5%	1/16W	
R547	1-216-821-11	METAL GLAZE	1K	5%	1/16W	
R548	1-216-823-11	METAL GLAZE	1.5K	5%	1/16W	
R549	1-216-830-11	METAL GLAZE	5.6K	5%	1/16W	

BOARD

W451	1-629-190-11	FP-155 BOARD	

****

*A-7062-172-A DI-21 BOARD, COMPLETE (Ref.No 5,000 Series)
****

CAPACITOR

C620	1-164-232-11	CERAMIC CHIP	0.01MF		50V
C621	1-164-232-11	CERAMIC CHIP	0.01MF		50V
C623	1-124-779-00	ELECT CHIP	10MF	20%	16V
C624	1-124-779-00	ELECT CHIP	10MF	20%	16V
C626	1-164-232-11	CERAMIC CHIP	0.01MF	10%	50V
C627	1-124-778-00	ELECT CHIP	22MF	20%	6.3V
C629	1-124-778-00	ELECT CHIP	22MF	20%	6.3V
C630	1-164-232-11	CERAMIC CHIP	0.01MF		50V
C631	1-135-091-00	TANTAL. CHIP	1MF	20%	16V
C634	1-124-778-00	ELECT CHIP	22MF	20%	6.3V
C635	1-164-232-11	CERAMIC CHIP	0.01MF	10%	50V
C636	1-164-232-11	CERAMIC CHIP	0.01MF		50V
C637	1-164-232-11	CERAMIC CHIP	0.01MF	10%	50V
C639	1-124-778-00	ELECT CHIP	22MF	20%	6.3V
C640	1-126-206-11	ELECT CHIP	100MF	20%	6.3V
C641	1-126-206-11	ELECT CHIP	100MF	20%	6.3V
C642	1-126-206-11	ELECT CHIP	100MF	20%	6.3V
C643	1-163-127-00	CERAMIC CHIP	270PF	5%	50V
C644	1-163-139-00	CERAMIC CHIP	820PF	5%	50V
C645	1-126-205-11	ELECT CHIP	47MF	20%	6.3V
C646	1-164-232-11	CERAMIC CHIP	0.01MF	10%	50V
C647	1-126-193-11	ELECT CHIP	1MF	20%	50V
C648	1-164-232-11	CERAMIC CHIP	0.01MF	10%	50V
C649	1-163-017-00	CERAMIC CHIP	0.0047MF	10%	50V
C650	1-164-182-11	CERAMIC CHIP	0.0033MF	10%	50V
C651	1-126-602-11	ELECT CHIP	3.3MF	20%	50V
C652	1-126-193-11	ELECT CHIP	1MF	20%	50V
C653	1-163-125-00	CERAMIC CHIP	220PF	5%	50V
C654	1-163-098-00	CERAMIC CHIP	16PF	5%	50V
C655	1-124-778-00	ELECT CHIP	22MF	20%	6.3V
C656	1-163-009-11	CERAMIC CHIP	0.001MF	10%	50V
C657	1-163-038-00	CERAMIC CHIP	0.1MF		25V
C660	1-126-205-11	ELECT CHIP	47MF	20%	6.3V
C661	1-163-038-00	CERAMIC CHIP	0.1MF		25V
C662	1-163-009-11	CERAMIC CHIP	0.001MF	10%	50V
C663	1-124-499-11	ELECT	1MF	20%	50V
C665	1-163-117-00	CERAMIC CHIP	100PF	5%	50V
C666	1-164-232-11	CERAMIC CHIP	0.01MF	10%	50V
C667	1-124-499-11	ELECT	1MF	20%	50V
C669	1-126-193-11	ELECT CHIP	1MF	20%	50V
C673	1-124-778-00	ELECT CHIP	22MF	20%	6.3V
C674	1-163-038-00	CERAMIC CHIP	0.1MF		25V
C675	1-164-232-11	CERAMIC CHIP	0.01MF		50V
C676	1-163-009-11	CERAMIC CHIP	0.001MF	10%	50V
C677	1-126-205-11	ELECT CHIP	47MF	20%	6.3V
C678	1-163-038-00	CERAMIC CHIP	0.1MF		25V
C680	1-163-019-00	CERAMIC CHIP	0.0068MF	10%	50V
C681	1-163-009-11	CERAMIC CHIP	0.001MF	10%	50V
C682	1-163-133-00	CERAMIC CHIP	470PF	5%	50V
C683	1-163-117-00	CERAMIC CHIP	100PF	5%	50V
C685	1-124-778-00	ELECT CHIP	22MF	20%	6.3V
C686	1-163-038-00	CERAMIC CHIP	0.1MF		25V
C687	1-163-038-00	CERAMIC CHIP	0.1MF		25V
C688	1-126-206-11	ELECT CHIP	100MF	20%	6.3V
C689	1-124-778-00	ELECT CHIP	22MF	20%	6.3V
C690	1-164-232-11	CERAMIC CHIP	0.01MF		50V
C691	1-163-113-00	CERAMIC CHIP	68PF	5%	50V
C692	1-163-103-00	CERAMIC CHIP	27PF	5%	50V
C693	1-124-779-00	ELECT CHIP	10MF	20%	16V
C694	1-124-778-00	ELECT CHIP	22MF	20%	6.3V
C695	1-163-121-00	CERAMIC CHIP	150PF	5%	50V
C696	1-163-105-00	CERAMIC CHIP	33PF	5%	50V
C697	1-163-121-00	CERAMIC CHIP	150PF	5%	50V
C698	1-164-232-11	CERAMIC CHIP	0.01MF	10%	50V
C699	1-164-232-11	CERAMIC CHIP	0.01MF	10%	50V
C700	1-163-038-00	CERAMIC CHIP	0.1MF		25V
C701	1-126-205-11	ELECT CHIP	47MF	20%	6.3V
C702	1-126-205-11	ELECT CHIP	47MF	20%	6.3V
C703	1-126-206-11	ELECT CHIP	100MF	20%	6.3V
C705	1-126-205-11	ELECT CHIP	47MF	20%	6.3V
C706	1-164-232-11	CERAMIC CHIP	0.01MF	10%	50V
C707	1-124-779-00	ELECT CHIP	10MF	20%	16V
C708	1-163-110-00	CERAMIC CHIP	51PF	5%	50V
C709	1-164-232-11	CERAMIC CHIP	0.01MF		50V

When indicating parts by reference number, please include the board name.

Ref.No	Part No.	Description		Remark
C710	1-163-038-00	CERAMIC CHIP 0.1MF		25V
C711	1-164-232-11	CERAMIC CHIP 0.01MF		50V
C712	1-164-232-11	CERAMIC CHIP 0.01MF		50V
C713	1-126-601-11	ELECT CHIP 2.2MF	20%	50V
C714	1-164-232-11	CERAMIC CHIP 0.01MF	10%	50V
C715	1-164-232-11	CERAMIC CHIP 0.01MF		50V
C716	1-163-035-00	CERAMIC CHIP 0.047MF		50V
C717	1-164-232-11	CERAMIC CHIP 0.01MF		50V
C718	1-163-009-11	CERAMIC CHIP 0.001MF	10%	50V
C720	1-163-038-00	CERAMIC CHIP 0.1MF		25V
C721	1-135-161-21	TANTAL. CHIP 22MF	20%	6.3V
C722	1-124-778-00	ELECT CHIP 22MF	20%	6.3V
C723	1-124-778-00	ELECT CHIP 22MF	20%	6.3V
C724	1-126-206-11	ELECT CHIP 100MF	20%	6.3V
C725	1-126-205-11	ELECT CHIP 47MF	20%	6.3V
C726	1-163-038-00	CERAMIC CHIP 0.1MF		25V
C727	1-163-038-00	CERAMIC CHIP 0.1MF		25V
C729	1-163-038-00	CERAMIC CHIP 0.1MF		25V
C730	1-163-038-00	CERAMIC CHIP 0.1MF		25V
C731	1-163-038-00	CERAMIC CHIP 0.1MF		25V
C732	1-163-038-00	CERAMIC CHIP 0.1MF		25V
C733	1-163-038-00	CERAMIC CHIP 0.1MF		25V
C734	1-163-038-00	CERAMIC CHIP 0.1MF		25V
C735	1-163-038-00	CERAMIC CHIP 0.1MF		25V
C736	1-163-038-00	CERAMIC CHIP 0.1MF		25V
C737	1-163-038-00	CERAMIC CHIP 0.1MF		25V
C738	1-163-038-00	CERAMIC CHIP 0.1MF		25V
C739	1-163-038-00	CERAMIC CHIP 0.1MF		25V
C740	1-163-107-00	CERAMIC CHIP 39PF	5%	50V
C741	1-163-101-00	CERAMIC CHIP 22PF	5%	50V
C742	1-163-101-00	CERAMIC CHIP 22PF	5%	50V
C743	1-163-101-00	CERAMIC CHIP 22PF	5%	50V
C744	1-163-101-00	CERAMIC CHIP 22PF	5%	50V
C745	1-164-232-11	CERAMIC CHIP 0.01MF		50V
C746	1-164-232-11	CERAMIC CHIP 0.01MF		50V
C747	1-164-232-11	CERAMIC CHIP 0.01MF		50V
C748	1-164-232-11	CERAMIC CHIP 0.01MF		50V
C749	1-164-232-11	CERAMIC CHIP 0.01MF		50V
C750	1-164-232-11	CERAMIC CHIP 0.01MF		50V
C751	1-164-232-11	CERAMIC CHIP 0.01MF		50V
C752	1-164-232-11	CERAMIC CHIP 0.01MF		50V
C753	1-164-232-11	CERAMIC CHIP 0.01MF		50V
C754	1-163-038-00	CERAMIC CHIP 0.1MF		25V
C755	1-163-038-00	CERAMIC CHIP 0.1MF		25V
C756	1-164-232-11	CERAMIC CHIP 0.01MF		50V
C757	1-164-232-11	CERAMIC CHIP 0.01MF		50V
C758	1-164-232-11	CERAMIC CHIP 0.01MF		50V
C759	1-164-232-11	CERAMIC CHIP 0.01MF		50V
C760	1-164-232-11	CERAMIC CHIP 0.01MF		50V
C761	1-164-232-11	CERAMIC CHIP 0.01MF		50V
C762	1-164-232-11	CERAMIC CHIP 0.01MF		50V
C763	1-164-232-11	CERAMIC CHIP 0.01MF		50V
C764	1-164-232-11	CERAMIC CHIP 0.01MF		50V
C765	1-164-232-11	CERAMIC CHIP 0.01MF		50V
C766	1-164-232-11	CERAMIC CHIP 0.01MF		50V
C767	1-164-232-11	CERAMIC CHIP 0.01MF		50V
C768	1-164-232-11	CERAMIC CHIP 0.01MF		50V
C769	1-164-232-11	CERAMIC CHIP 0.01MF		50V
C770	1-164-232-11	CERAMIC CHIP 0.01MF		50V
C771	1-164-232-11	CERAMIC CHIP 0.01MF		50V
C772	1-164-232-11	CERAMIC CHIP 0.01MF		50V
C773	1-164-232-11	CERAMIC CHIP 0.01MF		50V
C774	1-164-232-11	CERAMIC CHIP 0.01MF		50V
C775	1-163-038-00	CERAMIC CHIP 0.1MF		25V
C776	1-163-038-00	CERAMIC CHIP 0.1MF		25V
C777	1-163-038-00	CERAMIC CHIP 0.1MF		25V
C778	1-163-038-00	CERAMIC CHIP 0.1MF		25V
C779	1-163-109-00	CERAMIC CHIP 47PF	5%	50V
C780	1-163-109-00	CERAMIC CHIP 47PF	5%	50V
C781	1-164-232-11	CERAMIC CHIP 0.01MF		50V
C783	1-135-162-21	TANTAL. CHIP 33MF	20%	6.3V
C785	1-164-161-11	CERAMIC CHIP 0.0022MF	10%	50V
C787	1-163-038-00	CERAMIC CHIP 0.1MF		25V
C788	1-163-092-00	CERAMIC CHIP 9PF	0.25PF	50V
C789	1-163-038-00	CERAMIC CHIP 0.1MF		25V
C791	1-163-129-00	CERAMIC CHIP 330PF	5%	50V

CONNECTOR

CN601	*1-566-190-11	PIN, CONNECTOR (PC BOARD)	11P
CN602	*1-566-187-11	PIN, CONNECTOR (PC BOARD)	8P
CN603	*1-565-882-11	PIN, CONNECTOR (PC BOARD)	10P
CN604	*1-565-876-11	PIN, CONNECTOR (PC BOARD)	4P
CN605	1-506-482-11	PIN, CONNECTOR	3P

DIODE

D701	8-713-300-88	DIODE 1T33C-01
D702	8-713-300-88	DIODE 1T33C-01
D703	8-713-300-88	DIODE 1T33C-01
D704	8-719-400-18	DIODE MA152WK
D706	8-719-949-46	DIODE 1T32
D707	8-719-940-45	DIODE DWA010
D708	8-719-940-45	DIODE DWA010
D709	8-719-949-46	DIODE 1T32
D710	8-719-400-18	DIODE MA152WK
D711	8-719-400-18	DIODE MA152WK

FERRITE BEAD

FB601	1-543-256-11	BEAD, FERRITE
FB602	1-543-256-11	BEAD, FERRITE
FB603	1-543-256-11	BEAD, FERRITE
FB604	1-543-256-11	BEAD, FERRITE
FB605	1-543-256-11	BEAD, FERRITE
FB606	1-543-256-11	BEAD, FERRITE

FILTER

FL601	1-421-927-21	FILTER, NOISE

When indicating parts by reference number, please include the board name.

DI-21

Ref.No	Part No.	Description	Remark
FL602	1-421-927-21	FILTER, NOISE	
		IC	
IC701	8-759-987-17	IC CXD1226Q	
IC702	8-759-987-18	IC CXD1227Q	
IC703	8-759-987-19	IC CXD1228Q	
IC704	8-759-987-20	IC CXD1229Q	
IC705	8-752-332-15	IC CXK1206M	
IC706	8-752-332-15	IC CXK1206M	
IC707	8-752-332-15	IC CXK1206M	
IC708	8-752-329-21	IC CXD1175M	
IC709	8-752-329-21	IC CXD1175M	
IC710	8-752-032-96	IC CXA1106M	
IC711	8-752-032-96	IC CXA1106M	
IC712	8-759-202-32	IC MC74HC163P	
IC713	8-759-011-65	IC MC74HC4053F	
IC714	8-759-011-65	IC MC74HC4053F	
IC716	8-759-206-28	IC TC74HC123F	
IC717	8-759-916-25	IC SN74HC32NS	
IC718	8-759-925-76	IC SN74HC08NS	
IC719	8-759-710-29	IC NJM2235M	
IC720	8-759-710-09	IC NJM2233AM	
		COIL	
L601	1-410-389-31	INDUCTOR CHIP 47UH	
L602	1-410-389-31	INDUCTOR CHIP 47UH	
L604	1-408-785-21	INDUCTOR CHIP 47UH	
L605	1-408-785-21	INDUCTOR CHIP 47UH	
L606	1-408-785-21	INDUCTOR CHIP 47UH	
L607	1-410-393-11	INDUCTOR CHIP 100UH	
L608	1-410-389-31	INDUCTOR CHIP 47UH	
L609	1-410-383-31	INDUCTOR CHIP 15UH	
L610	1-410-383-31	INDUCTOR CHIP 15UH	
L611	1-410-377-31	INDUCTOR CHIP 4.7UH	
L612	1-408-785-21	INDUCTOR CHIP 47UH	
L614	1-408-785-21	INDUCTOR CHIP 47UH	
L615	1-408-785-21	INDUCTOR CHIP 47UH	
L616	1-410-389-31	INDUCTOR CHIP 47UH	
L617	1-410-656-11	INDUCTOR CHIP 150UH	
L618	1-410-380-31	INDUCTOR CHIP 8.2UH	
L619	1-410-390-11	INDUCTOR CHIP 56UH	
L620	1-410-383-31	INDUCTOR CHIP 15UH	
L621	1-410-384-31	INDUCTOR CHIP 18UH	
L622	1-410-389-31	INDUCTOR CHIP 47UH	
L623	1-410-389-31	INDUCTOR CHIP 47UH	
L624	1-410-389-31	INDUCTOR CHIP 47UH	
L625	1-410-388-21	INDUCTOR CHIP 39UH	
L626	1-410-388-21	INDUCTOR CHIP 39UH	
		TRANSISTOR	
Q601	8-729-100-66	TRANSISTOR 2SC1623	
Q602	8-729-100-66	TRANSISTOR 2SC1623	
Q603	8-729-100-66	TRANSISTOR 2SC1623	
Q604	8-729-100-66	TRANSISTOR 2SC1623	
Q605	8-729-100-66	TRANSISTOR 2SC1623	
Q606	8-729-100-66	TRANSISTOR 2SC1623	
Q607	8-729-100-66	TRANSISTOR 2SC1623	
Q608	8-729-100-66	TRANSISTOR 2SC1623	
Q609	8-729-216-22	TRANSISTOR 2SA1162	
Q610	8-729-100-66	TRANSISTOR 2SC1623	
Q611	8-729-100-66	TRANSISTOR 2SC1623	
Q612	8-729-100-66	TRANSISTOR 2SC1623	
Q613	8-729-100-66	TRANSISTOR 2SC1623	
Q614	8-729-100-66	TRANSISTOR 2SC1623	
Q615	8-729-100-66	TRANSISTOR 2SC1623	
Q616	8-729-109-44	TRANSISTOR 2SK94	
Q617	8-729-901-01	TRANSISTOR DTC144EK	
Q618	8-729-100-66	TRANSISTOR 2SC1623	
Q619	8-729-100-66	TRANSISTOR 2SC1623	
Q620	8-729-100-66	TRANSISTOR 2SC1623	
Q621	8-729-100-66	TRANSISTOR 2SC1623	
Q622	8-729-100-66	TRANSISTOR 2SC1623	
Q623	8-729-100-66	TRANSISTOR 2SC1623	
Q624	8-729-100-66	TRANSISTOR 2SC1623	
Q625	8-729-100-66	TRANSISTOR 2SC1623	
Q626	8-729-100-66	TRANSISTOR 2SC1623	
Q627	8-729-100-66	TRANSISTOR 2SC1623	
Q628	8-729-100-66	TRANSISTOR 2SC1623	
Q629	8-729-901-01	TRANSISTOR DTC144EK	
Q630	8-729-100-66	TRANSISTOR 2SC1623	
Q631	8-729-100-66	TRANSISTOR 2SC1623	
Q632	8-729-100-66	TRANSISTOR 2SC1623	
		RESISTOR	
R601	1-216-295-00	METAL GLAZE 0 5% 1/10W	
R602	1-216-295-00	METAL GLAZE 0 5% 1/10W	
R603	1-216-295-00	METAL GLAZE 0 5% 1/10W	
R604	1-216-295-00	METAL GLAZE 0 5% 1/10W	
R605	1-216-295-00	METAL GLAZE 0 5% 1/10W	
R606	1-216-295-00	METAL GLAZE 0 5% 1/10W	
R607	1-216-295-00	METAL GLAZE 0 5% 1/10W	
R608	1-216-295-00	METAL GLAZE 0 5% 1/10W	
R609	1-216-295-00	METAL GLAZE 0 5% 1/10W	
R610	1-216-295-00	METAL GLAZE 0 5% 1/10W	
R611	1-216-295-00	METAL GLAZE 0 5% 1/10W	
R612	1-216-295-00	METAL GLAZE 0 5% 1/10W	
R613	1-216-295-00	METAL GLAZE 0 5% 1/10W	
R614	1-216-085-00	METAL GLAZE 33K 5% 1/10W	
R615	1-216-089-00	METAL GLAZE 47K 5% 1/10W	
R616	1-216-085-00	METAL GLAZE 33K 5% 1/10W	
R617	1-216-089-00	METAL GLAZE 47K 5% 1/10W	
R618	1-216-089-00	METAL GLAZE 47K 5% 1/10W	
R619	1-216-085-00	METAL GLAZE 33K 5% 1/10W	
R620	1-216-085-00	METAL GLAZE 33K 5% 1/10W	
R621	1-216-089-00	METAL GLAZE 47K 5% 1/10W	
R624	1-216-089-00	METAL GLAZE 47K 5% 1/10W	

When indicating parts by reference number, please include the board name.

Ref.No	Part No.	Description				Remark
R625	1-216-089-00	METAL GLAZE	47K	5%	1/10W	
R626	1-216-049-00	METAL GLAZE	1K	5%	1/10W	
R627	1-216-049-00	METAL GLAZE	1K	5%	1/10W	
R628	1-216-073-00	METAL GLAZE	10K	5%	1/10W	
R629	1-216-041-00	METAL GLAZE	470	5%	1/10W	
R630	1-216-037-00	METAL GLAZE	330	5%	1/10W	
R631	1-216-057-00	METAL GLAZE	2.2K	5%	1/10W	
R632	1-216-081-00	METAL GLAZE	22K	5%	1/10W	
R633	1-216-049-00	METAL GLAZE	1K	5%	1/10W	
R634	1-216-069-00	METAL GLAZE	6.8K	5%	1/10W	
R635	1-216-073-00	METAL GLAZE	10K	5%	1/10W	
R636	1-216-049-00	METAL GLAZE	1K	5%	1/10W	
R637	1-216-025-00	METAL GLAZE	100	5%	1/10W	
R638	1-216-025-00	METAL GLAZE	100	5%	1/10W	
R639	1-216-049-00	METAL GLAZE	1K	5%	1/10W	
R640	1-216-039-00	METAL GLAZE	390	5%	1/10W	
R641	1-216-073-00	METAL GLAZE	10K	5%	1/10W	
R642	1-216-061-00	METAL GLAZE	3.3K	5%	1/10W	
R643	1-216-049-00	METAL GLAZE	1K	5%	1/10W	
R644	1-216-081-00	METAL GLAZE	22K	5%	1/10W	
R645	1-216-067-00	METAL GLAZE	5.6K	5%	1/10W	
R646	1-216-053-00	METAL GLAZE	1.5K	5%	1/10W	
R647	1-216-025-00	METAL GLAZE	100	5%	1/10W	
R648	1-216-073-00	METAL GLAZE	10K	5%	1/10W	
R649	1-216-073-00	METAL GLAZE	10K	5%	1/10W	
R650	1-216-041-00	METAL GLAZE	470	5%	1/10W	
R652	1-216-061-00	METAL GLAZE	3.3K	5%	1/10W	
R653	1-216-057-00	METAL GLAZE	2.2K	5%	1/10W	
R654	1-216-019-00	METAL GLAZE	56	5%	1/10W	
R655	1-216-049-00	METAL GLAZE	1K	5%	1/10W	
R656	1-216-057-00	METAL GLAZE	2.2K	5%	1/10W	
R657	1-216-021-00	METAL GLAZE	68	5%	1/10W	
R658	1-216-049-00	METAL GLAZE	1K	5%	1/10W	
R659	1-216-117-00	METAL GLAZE	680K	5%	1/10W	
R660	1-216-085-00	METAL GLAZE	33K	5%	1/10W	
R661	1-216-085-00	METAL GLAZE	33K	5%	1/10W	
R662	1-216-085-00	METAL GLAZE	33K	5%	1/10W	
R663	1-216-073-00	METAL GLAZE	10K	5%	1/10W	
R664	1-216-085-00	METAL GLAZE	33K	5%	1/10W	
R665	1-216-049-00	METAL GLAZE	1K	5%	1/10W	
R666	1-216-041-00	METAL GLAZE	470	5%	1/10W	
R671	1-216-295-00	METAL GLAZE	0	5%	1/10W	
R675	1-216-073-00	METAL GLAZE	10K	5%	1/10W	
R676	1-216-097-00	METAL GLAZE	100K	5%	1/10W	
R678	1-216-295-00	METAL GLAZE	0	5%	1/10W	
R679	1-216-119-00	METAL GLAZE	820K	5%	1/10W	
R680	1-216-111-00	METAL GLAZE	390K	5%	1/10W	
R681	1-216-105-00	METAL GLAZE	220K	5%	1/10W	
R682	1-216-097-00	METAL GLAZE	100K	5%	1/10W	
R683	1-216-029-00	METAL GLAZE	150	5%	1/10W	
R684	1-216-037-00	METAL GLAZE	330	5%	1/10W	
R685	1-216-121-00	METAL GLAZE	1M	5%	1/10W	
R686	1-216-053-00	METAL GLAZE	1.5K	5%	1/10W	

Ref.No	Part No.	Description				Remark
R687	1-216-097-00	METAL GLAZE	100K	5%	1/10W	
R688	1-216-119-00	METAL GLAZE	820K	5%	1/10W	
R689	1-216-111-00	METAL GLAZE	390K	5%	1/10W	
R690	1-216-105-00	METAL GLAZE	220K	5%	1/10W	
R691	1-216-097-00	METAL GLAZE	100K	5%	1/10W	
R692	1-216-073-00	METAL GLAZE	10K	5%	1/10W	
R693	1-216-121-00	METAL GLAZE	1M	5%	1/10W	
R694	1-216-085-00	METAL GLAZE	33K	5%	1/10W	
R695	1-216-085-00	METAL GLAZE	33K	5%	1/10W	
R696	1-216-009-00	METAL GLAZE	22	5%	1/10W	
R700	1-216-295-00	METAL GLAZE	0	5%	1/10W	
R701	1-216-295-00	METAL GLAZE	0	5%	1/10W	
R712	1-216-121-00	METAL GLAZE	1M	5%	1/10W	
R713	1-216-063-00	METAL GLAZE	3.9K	5%	1/10W	
R714	1-216-295-00	METAL GLAZE	0	5%	1/10W	
R716	1-216-097-00	METAL GLAZE	100K	5%	1/10W	
R717	1-216-295-00	METAL GLAZE	0	5%	1/10W	
R720	1-216-295-00	METAL GLAZE	0	5%	1/10W	
R721	1-216-065-00	METAL GLAZE	4.7K	5%	1/10W	
R722	1-216-065-00	METAL GLAZE	4.7K	5%	1/10W	
R723	1-216-029-00	METAL GLAZE	150	5%	1/10W	
R724	1-216-047-00	METAL GLAZE	820	5%	1/10W	
R725	1-216-121-00	METAL GLAZE	1M	5%	1/10W	
R726	1-216-085-00	METAL GLAZE	33K	5%	1/10W	
R727	1-216-061-00	METAL GLAZE	3.3K	5%	1/10W	
R728	1-216-295-00	METAL GLAZE	0	5%	1/10W	
R729	1-216-073-00	METAL GLAZE	10K	5%	1/10W	
R730	1-216-041-00	METAL GLAZE	470	5%	1/10W	
R731	1-216-035-00	METAL GLAZE	270	5%	1/10W	
R732	1-216-057-00	METAL GLAZE	2.2K	5%	1/10W	
R733	1-216-061-00	METAL GLAZE	3.3K	5%	1/10W	
R734	1-216-081-00	METAL GLAZE	22K	5%	1/10W	
R735	1-216-065-00	METAL GLAZE	4.7K	5%	1/10W	
R736	1-216-041-00	METAL GLAZE	470	5%	1/10W	
R737	1-216-037-00	METAL GLAZE	330	5%	1/10W	
R738	1-216-061-00	METAL GLAZE	3.3K	5%	1/10W	
R739	1-216-061-00	METAL GLAZE	3.3K	5%	1/10W	
R740	1-216-039-00	METAL GLAZE	390	5%	1/10W	
R741	1-216-041-00	METAL GLAZE	470	5%	1/10W	
R742	1-216-073-00	METAL GLAZE	10K	5%	1/10W	
R743	1-216-025-00	METAL GLAZE	100	5%	1/10W	
R744	1-216-049-00	METAL GLAZE	1K	5%	1/10W	
R745	1-216-041-00	METAL GLAZE	470	5%	1/10W	
R746	1-216-061-00	METAL GLAZE	3.3K	5%	1/10W	
R747	1-216-051-00	METAL GLAZE	1.2K	5%	1/10W	
R748	1-216-057-00	METAL GLAZE	2.2K	5%	1/10W	
R749	1-216-081-00	METAL GLAZE	22K	5%	1/10W	
R750	1-216-049-00	METAL GLAZE	1K	5%	1/10W	
R751	1-216-295-00	METAL GLAZE	0	5%	1/10W	
R752	1-216-295-00	METAL GLAZE	0	5%	1/10W	
R753	1-216-295-00	METAL GLAZE	0	5%	1/10W	
R754	1-216-295-00	METAL GLAZE	0	5%	1/10W	
R755	1-216-295-00	METAL GLAZE	0	5%	1/10W	

When indicating parts by reference number, please include the board name.

DI-21 CC-27

Ref.No	Part No.	Description				Remark
R756	1-216-049-00	METAL GLAZE	1K	5%	1/10W	
R757	1-216-049-00	METAL GLAZE	1K	5%	1/10W	
R758	1-216-041-00	METAL GLAZE	470	5%	1/10W	
R759	1-216-049-00	METAL GLAZE	1K	5%	1/10W	
R760	1-216-049-00	METAL GLAZE	1K	5%	1/10W	
R761	1-216-081-00	METAL GLAZE	22K	5%	1/10W	
R762	1-216-077-00	METAL GLAZE	15K	5%	1/10W	
R763	1-216-061-00	METAL GLAZE	3.3K	5%	1/10W	
R764	1-216-065-00	METAL GLAZE	4.7K	5%	1/10W	
R765	1-216-069-00	METAL GLAZE	6.8K	5%	1/10W	
R767	1-216-061-00	METAL GLAZE	3.3K	5%	1/10W	
R768	1-216-025-00	METAL GLAZE	100	5%	1/10W	
R769	1-216-061-00	METAL GLAZE	3.3K	5%	1/10W	
R770	1-216-025-00	METAL GLAZE	100	5%	1/10W	
R771	1-216-085-00	METAL GLAZE	33K	5%	1/10W	
R772	1-216-057-00	METAL GLAZE	2.2K	5%	1/10W	
R773	1-216-049-00	METAL GLAZE	1K	5%	1/10W	
R774	1-216-049-00	METAL GLAZE	1K	5%	1/10W	
R775	1-216-049-00	METAL GLAZE	1K	5%	1/10W	
R776	1-216-073-00	METAL GLAZE	10K	5%	1/10W	
R777	1-216-073-00	METAL GLAZE	10K	5%	1/10W	
R778	1-216-081-00	METAL GLAZE	22K	5%	1/10W	
R779	1-216-083-00	METAL GLAZE	27K	5%	1/10W	
R780	1-216-081-00	METAL GLAZE	22K	5%	1/10W	
R781	1-216-083-00	METAL GLAZE	27K	5%	1/10W	
R782	1-216-089-00	METAL GLAZE	47K	5%	1/10W	
R783	1-216-073-00	METAL GLAZE	10K	5%	1/10W	
R784	1-216-073-00	METAL GLAZE	10K	5%	1/10W	
R785	1-216-077-00	METAL GLAZE	15K	5%	1/10W	
R786	1-216-089-00	METAL GLAZE	47K	5%	1/10W	
R787	1-216-059-00	METAL GLAZE	2.7K	5%	1/10W	
R788	1-216-061-00	METAL GLAZE	3.3K	5%	1/10W	
R789	1-216-089-00	METAL GLAZE	47K	5%	1/10W	
R790	1-216-089-00	METAL GLAZE	47K	5%	1/10W	
R791	1-216-073-00	METAL GLAZE	10K	5%	1/10W	
R792	1-216-081-00	METAL GLAZE	22K	5%	1/10W	
R793	1-216-065-00	METAL GLAZE	4.7K	5%	1/10W	
R794	1-216-295-00	METAL GLAZE	0	5%	1/10W	
R797	1-216-295-00	METAL GLAZE	0	5%	1/10W	
R798	1-216-295-00	METAL GLAZE	0	5%	1/10W	
R800	1-216-049-00	METAL GLAZE	1K	5%	1/10W	
R801	1-216-049-00	METAL GLAZE	1K	5%	1/10W	
R802	1-216-295-00	METAL GLAZE	0	5%	1/10W	
R804	1-216-295-00	METAL GLAZE	0	5%	1/10W	
R805	1-216-089-00	METAL GLAZE	47K	5%	1/10W	
R806	1-216-085-00	METAL GLAZE	33K	5%	1/10W	
R807	1-216-089-00	METAL GLAZE	47K	5%	1/10W	
R808	1-216-059-00	METAL GLAZE	2.7K	5%	1/10W	
R809	1-216-073-00	METAL GLAZE	10K	5%	1/10W	
R810	1-216-085-00	METAL GLAZE	33K	5%	1/10W	
R811	1-216-089-00	METAL GLAZE	47K	5%	1/10W	
R812	1-216-057-00	METAL GLAZE	2.2K	5%	1/10W	
R813	1-216-073-00	METAL GLAZE	10K	5%	1/10W	

Ref.No	Part No.	Description				Remark
R814	1-216-071-00	METAL GLAZE	8.2K	5%	1/10W	
R815	1-216-063-00	METAL GLAZE	3.9K	5%	1/10W	
R816	1-216-071-00	METAL GLAZE	8.2K	5%	1/10W	
R817	1-216-063-00	METAL GLAZE	3.9K	5%	1/10W	
R818	1-216-061-00	METAL GLAZE	3.3K	5%	1/10W	
R825	1-216-295-00	METAL GLAZE	0	5%	1/10W	
R826	1-216-295-00	METAL GLAZE	0	5%	1/10W	
R827	1-216-295-00	METAL GLAZE	0	5%	1/10W	
R828	1-216-295-00	METAL GLAZE	0	5%	1/10W	
R829	1-216-295-00	METAL GLAZE	0	5%	1/10W	
R830	1-216-295-00	METAL GLAZE	0	5%	1/10W	
R831	1-216-295-00	METAL GLAZE	0	5%	1/10W	
R832	1-216-295-00	METAL GLAZE	0	5%	1/10W	
R833	1-216-295-00	METAL GLAZE	0	5%	1/10W	
R834	1-216-295-00	METAL GLAZE	0	5%	1/10W	
R835	1-216-295-00	METAL GLAZE	0	5%	1/10W	
R836	1-216-295-00	METAL GLAZE	0	5%	1/10W	
R837	1-216-295-00	METAL GLAZE	0	5%	1/10W	
R838	1-216-295-00	METAL GLAZE	0	5%	1/10W	
R839	1-216-295-00	METAL GLAZE	0	5%	1/10W	
R840	1-216-295-00	METAL GLAZE	0	5%	1/10W	
R841	1-216-295-00	METAL GLAZE	0	5%	1/10W	
R842	1-216-295-00	METAL GLAZE	0	5%	1/10W	

VARIABLE RESISTOR

RV602	1-230-866-11	RES, ADJ, METAL GLAZE 470
RV603	1-230-866-11	RES, ADJ, METAL GLAZE 470
RV604	1-230-870-11	RES, ADJ, METAL GLAZE 10K
RV605	1-230-870-11	RES, ADJ, METAL GLAZE 10K

TRIMMER

VC701	1-141-311-11	CAP, VAR, TRIMMER (CHIP)

CRYSTAL

X701	1-527-722-00	OSCILLATOR, CRYSTAL
X703	1-567-900-11	VIBRATOR, CRYSTAL

DIODE

ZD601	8-719-105-40	DIODE RD3.0M-B2
ZD602	8-719-105-40	DIODE RD3.0M-B2

****

*1-633-589-11 CC-27 BOARD (Ref.No 6,000 Series)
****

CONNECTOR

CN001	1-566-529-11	CONNECTOR, FPC (ZIF) 13P
CN002	1-566-527-11	CONNECTOR, FPC (ZIF) 11P
CN003	1-566-530-11	CONNECTOR, FPC (ZIF) 14P

DIODE

D001	8-719-404-40	DIODE MA121

When indicating parts by reference number, please include the board name.

Ref.No	Part No.	Description			Remark
D002	8-719-404-40	DIODE MA121			
D003	8-719-400-18	DIODE MA152WK			

****

*1-633-596-11 FU-70 BOARD (Ref.No 7,000 Series)
****

CAPACITOR

C601	1-124-570-11	ELECT	220MF	20%	16V
C602	1-124-570-11	ELECT	220MF	20%	16V
C603	1-124-570-11	ELECT	220MF	20%	16V

CONNECTOR

CN601	*1-566-115-11	CONNECTOR, BOARD TO BOARD 4P
CN604	*1-566-184-11	PIN, CONNECTOR (PC BOARD) 5P
CN605	*1-566-186-11	PIN, CONNECTOR (PC BOARD) 7P
CN606	1-506-481-11	PIN, CONNECTOR 2P

FUSE

F601 ⚠	1-532-778-21	FUSE, MICRO (SECONDARY)
F602 ⚠	1-532-778-21	FUSE, MICRO (SECONDARY)
F603 ⚠	1-532-778-21	FUSE, MICRO (SECONDARY)
F604 ⚠	1-532-778-21	FUSE, MICRO (SECONDARY)
F605 ⚠	1-532-778-21	FUSE, MICRO (SECONDARY)

COIL

L601	1-410-337-11	INDUCTOR	1UH
L602	1-410-337-11	INDUCTOR	1UH
L603	1-410-337-11	INDUCTOR	1UH
L604	1-410-337-11	INDUCTOR	1UH
L605	1-410-337-11	INDUCTOR	1UH
L606	1-410-337-11	INDUCTOR	1UH

****

*1-633-597-11 DC-25 BOARD (Ref.No 8,000 Series)
****

JACK

J610	1-569-398-11	JACK (DC IN 7.5V)

****

*A-7071-007-A CD-13 BOARD, COMPLETE (Ref.No 2,000 Series)
****

*3-734-418-01 PROTECTOR, HIC

CAPACITOR

C200	1-124-778-00	ELECT CHIP	22MF	20%	6.3V
C201	1-135-146-21	TANTAL. CHIP	0.68MF	20%	25V
C202	1-164-232-11	CERAMIC CHIP	0.01MF	10%	50V
C203	1-126-200-11	ELECT CHIP	10MF	20%	35V
C204	1-163-009-11	CERAMIC CHIP	0.001MF	10%	50V
C205	1-164-161-11	CERAMIC CHIP	0.0022MF	10%	50V
C206	1-126-601-11	ELECT CHIP	2.2MF	20%	50V
C207	1-163-009-11	CERAMIC CHIP	0.001MF	10%	50V
C208	1-135-159-21	TANTAL. CHIP	10MF	20%	20V
C209	1-163-009-11	CERAMIC CHIP	0.001MF	10%	50V
C210	1-163-009-11	CERAMIC CHIP	0.001MF	10%	50V
C211	1-162-638-11	CERAMIC CHIP	1MF		16V
C212	1-163-037-11	CERAMIC CHIP	0.022MF	10%	25V
C213	1-135-162-21	TANTAL. CHIP	33MF	20%	6.3V
C214	1-164-005-11	CERAMIC CHIP	0.47MF		25V
C215	1-163-009-11	CERAMIC CHIP	0.001MF	10%	50V

CONNECTOR

CN201	1-566-516-11	CONNECTOR, FPC (ZIF) 16P

DIODE

D200	8-719-404-32	DIODE MA141WA
D201	8-719-404-46	DIODE MA110

TRANSISTOR

Q200	8-729-421-23	TRANSISTOR XN1216
Q201	8-729-905-35	TRANSISTOR 2SC4081
Q202	8-765-105-53	TRANSISTOR 2SK300-3
Q203	8-729-402-84	TRANSISTOR XN4601

RESISTOR

R200	1-216-079-00	METAL GLAZE	18K	5%	1/10W
R201	1-216-089-00	METAL GLAZE	47K	5%	1/10W
R202	1-216-095-00	METAL GLAZE	82K	5%	1/10W
R203	1-216-073-00	METAL GLAZE	10K	5%	1/10W
R204	1-216-107-00	METAL GLAZE	270K	5%	1/10W
R205	1-216-093-00	METAL GLAZE	68K	5%	1/10W
R206	1-216-077-00	METAL GLAZE	15K	5%	1/10W
R207	1-216-121-00	METAL GLAZE	1M	5%	1/10W
R208	1-216-039-00	METAL GLAZE	390	5%	1/10W
R209	1-216-081-00	METAL GLAZE	22K	5%	1/10W
R210	1-216-079-00	METAL GLAZE	18K	5%	1/10W
R211	1-216-025-00	METAL GLAZE	100	5%	1/10W
R212	1-216-061-00	METAL GLAZE	3.3K	5%	1/10W
R213	1-216-075-00	METAL GLAZE	12K	5%	1/10W
R215	1-216-089-00	METAL GLAZE	47K	5%	1/10W
R216	1-216-089-00	METAL GLAZE	47K	5%	1/10W

****

*1-633-603-11 DK-3 BOARD (Ref.No 2,000 Series)
****

CONNECTOR

CN761	*1-565-884-11	PIN, CONNECTOR (PC BOARD) 12P

The components identified by mark ⚠ or dotted line with mark ⚠ are critical for safety.
Replace only with part number specified.

Les composants identifiés par une marque ⚠ sont critiques pour la sécurité.
Ne les remplacer que par une pièce portant le numéro spécifé.

When indicating parts by reference number, please include the board name.

DK-3 | LR-11 | LL-11 | HJ-5 | SW-113 | VJ-6

Ref.No	Part No.	Description	Remark
		DIODE	
D761	8-719-951-22	DIODE IMN10	
D762	8-719-951-22	DIODE IMN10	
D763	8-719-951-22	DIODE IMN10	
D764	8-719-951-22	DIODE IMN10	
		SWITCH	
S761	1-553-977-00	SWITCH, SLIDE (DIGITAL EFECT)	
S762	1-571-787-11	SWITCH, TACTILE (STOPMOTION)	
S763	1-571-787-11	SWITCH, TACTILE (FLUSHMOTION)	
S764	1-571-787-11	SWITCH, TACTILE (MULTI)	
S765	1-571-787-11	SWITCH, TACTILE (CLEAR)	
S766	1-571-102-11	SWITCH, SLIDE (INT REC)	
S767	1-571-787-11	SWITCH, TACTILE (SLOW ADJ ▲)	
S768	1-571-787-11	SWITCH, TACTILE (SLOW ADJ ▼)	
S770	1-553-977-00	SWITCH, SLIDE (Hi8)	
S771	1-553-977-00	SWITCH, SLIDE (EDIT)	
S772	1-553-977-00	SWITCH, SLIDE (SPEAKER)	

****

*1-633-607-11 LR-11 BOARD (Ref.No 9,000 Series)
****

****

*1-633-606-11 LL-1 BOARD (Ref.No 3,000 Series)
****

****

*1-633-594-11 HJ-5 BOARD (Ref.No 7,000 Series)
****

		CONNECTOR	
CN861	*1-566-190-11	PIN, CONNECTOR (PC BOARD) 11P	
CN862	1-565-874-11	PIN, CONNECTOR (PC BOARD) 2P	
		DIODE	
D863	8-719-106-43	DIODE RD9.1M-B1	
D864	8-719-106-43	DIODE RD9.1M-B1	
D865	8-719-106-43	DIODE RD9.1M-B1	
D866	8-719-106-43	DIODE RD9.1M-B1	
D867	8-719-106-43	DIODE RD9.1M-B1	
D868	8-719-106-43	DIODE RD9.1M-B1	
		JACK	
J862	1-562-785-11	JACK (PHONE)	
J863	1-562-785-21	JACK (MONO MIC)	
		COIL	
L861	1-410-192-51	INDUCTOR CHIP 1UH	
L862	1-410-192-51	INDUCTOR CHIP 1UH	
L863	1-410-192-51	INDUCTOR CHIP 1UH	
L864	1-410-192-51	INDUCTOR CHIP 1UH	
L865	1-410-192-51	INDUCTOR CHIP 1UH	
		RESISTOR	
R861	1-216-067-00	METAL GLAZE 5.6K 5% 1/10W	
R862	1-216-071-00	METAL GLAZE 8.2K 5% 1/10W	
		VARIABLE RESISTOR	
RV861	1-238-266-11	RES, VAR, CARBON 10K (PHONE LEVEL)	
		SWITCH	
S863	1-554-088-00	SWITCH, KEY BOARD (START/STOP)	

****

*1-633-599-11 SW-113 BOARD (Ref.No 8,000 Series)
****

		CONNECTOR	
CN821	*1-565-875-11	PIN, CONNECTOR (PC BOARD) 3P	
CN822	1-565-874-11	PIN, CONNECTOR (PC BOARD) 2P	
		DIODE	
D821	8-719-940-45	DIODE DWA010	
		SWITCH	
S821	1-570-689-11	SWITCH, KEY BOARD (START/STOP)	
S822	1-553-977-00	SWITCH, SLIDE (STANDBY)	

****

*1-633-598-11 VJ-6 BOARD (Ref.No 9,000 Series)
****

		CAPACITOR	
C805	1-124-469-71	ELECT 220MF 20%	6.3V
C811	1-163-009-11	CERAMIC CHIP 0.001MF	50V
C812	1-163-009-11	CERAMIC CHIP 0.001MF	50V
C813	1-164-232-11	CERAMIC CHIP 0.01MF	50V
C814	1-164-232-11	CERAMIC CHIP 0.01MF	50V
		CONNECTOR	
CN811	*1-566-197-11	PIN, CONNECTOR (PC BOARD) 4P	
CN812	*1-566-200-11	PIN, CONNECTOR (PC BOARD) 7P	
CN813	1-562-183-00	SOCKET 8P	
		DIODE	
D818	8-719-106-43	DIODE RD9.1M-B1	
D819	8-719-106-43	DIODE RD9.1M-B1	
		JACK	
J813	1-565-276-11	JACK, ULTRA SMALL 1P (REMOTE)	

When indicating parts by reference number, please include the board name.

Ref.No	Part No.	Description	Remark
		COIL	
L815	1-410-369-11	INDUCTOR CHIP 1UH	
L816	1-410-369-11	INDUCTOR CHIP 1UH	
L817	1-410-369-11	INDUCTOR CHIP 1UH	
L818	1-408-958-21	INDUCTOR 1UH	
		RESISTOR	
R812	1-216-295-00	METAL GLAZE 0 5% 1/10W	

****

*1-633-604-11 VK-2 BOARD (Ref.No 3,000 Series)
****

		DIODE	
D731	8-719-951-22	DIODE IMN10	
D732	8-719-951-22	DIODE IMN10	
D733	8-719-951-22	DIODE IMN10	
D734	8-719-951-22	DIODE IMN10	
D735	8-719-951-22	DIODE IMN10	
D736	8-719-104-34	DIODE 1S2835	
		SWITCH	
S731	1-571-787-11	SWITCH, TACTILE (■)	
S732	1-571-787-11	SWITCH, TACTILE (◀◀)	
S733	1-571-787-11	SWITCH, TACTILE (▶)	
S734	1-571-787-11	SWITCH, TACTILE (▶▶)	
S735	1-571-787-11	SWITCH, TACTILE (PAUSE)	
S736	1-571-787-11	SWITCH, TACTILE (FRAME)	
S737	1-571-787-11	SWITCH, TACTILE (SLOW)	
S738	1-571-787-11	SWITCH, TACTILE (INDEX)	
S739	1-571-787-11	SWITCH, TACTILE (MARK)	
S740	1-571-787-11	SWITCH, TACTILE (ERASE)	
S741	1-571-787-11	SWITCH, TACTILE (DATA SCREEN)	
S742	1-571-102-11	SWITCH, SLIDE (AUDIO DUB)	
S743	1-571-101-12	SWITCH, SLIDE (POWER)	
S744	1-571-102-11	SWITCH, SLIDE (REC)	
S745	1-553-977-51	SWITCH, SLIDE (+ VTR)	

****

*1-633-602-11 CK-18 BOARD (Ref.No 1,000 Series)
****

		CONNECTOR	
CN701	1-566-531-11	CONNECTOR, FPC (ZIF) 15P	
CN702	*1-566-182-11	PIN, CONNECTOR (PC BOARD) 3P	
		DIODE	
D701	8-719-951-22	DIODE IMN10	
D702	8-719-951-22	DIODE IMN10	
D703	8-719-951-22	DIODE IMN10	
D704	8-719-951-22	DIODE IMN10	
		SWITCH	
S701	1-571-787-11	SWITCH, TACTILE (FADER)	
S702	1-571-787-11	SWITCH, TACTILE (DIGITAL ZOOM)	
S703	1-554-592-21	SWITCH, KEY BOARD (EDITSEARCH +)	
S704	1-554-592-21	SWITCH, KEY BOARD (EDITSEARCH -)	
S705	1-571-787-11	SWITCH, TACTILE (P IN S)	
S706	1-571-787-11	SWITCH, TACTILE (TITLE 1)	
S707	1-571-787-11	SWITCH, TACTILE (TITLE 2)	
S708	1-571-787-11	SWITCH, TACTILE (MEMORY)	
S709	1-571-787-11	SWITCH, TACTILE (COLOR/MODE)	
S710	1-571-787-11	SWITCH, TACTILE (PICTURE)	

****

*1-633-605-11 IR-20 BOARD (Ref.No 8,000 Series)
****

		CAPACITOR	
C701	1-126-154-11	ELECT 47MF 20% 6.3V	
		CONNECTOR	
CN704	1-506-469-11	PIN, CONNECTOR 4P	
CN705	1-506-469-11	PIN, CONNECTOR 4P	
		DIODE	
D707	8-719-400-18	DIODE MA152WK	
		IC	
IC701	8-741-100-64	IC SBX1621-51	
IC702	8-741-100-64	IC SBX1621-51	
		RESISTOR	
R701	1-216-017-00	METAL GLAZE 47 5% 1/10W	

****

*1-633-593-11 MJ-23 BOARD (Ref.No 7,000 Series)
****

		CAPACITOR	
C731	1-163-009-11	CERAMIC CHIP 0.001MF 10% 50V	
C732	1-163-009-11	CERAMIC CHIP 0.001MF 10% 50V	
C733	1-163-009-11	CERAMIC CHIP 0.001MF 10% 50V	
C734	1-124-589-11	ELECT 47MF 20% 16V	
		CONNECTOR	
CN731	*1-566-185-11	PIN, CONNECTOR (PC BOARD) 6P	
CN732	1-506-469-11	PIN, CONNECTOR 4P	
		DIODE	
D737	8-719-106-43	DIODE RD9.1M-B1	
D738	8-719-106-43	DIODE RD9.1M-B1	

When indicating parts by reference number, please include the board name.

MJ-23 | LI-12 | TL-18 | TL-19 | FP-89 | FP-90

Ref.No	Part No.	Description	Remark
		JACK	
J733	1-507-797-41	JACK, LARGE TYPE (MIC L/R)	
		COIL	
L731	1-410-192-51	INDUCTOR CHIP 1UH	
L732	1-410-192-51	INDUCTOR CHIP 1UH	
L733	1-410-192-51	INDUCTOR CHIP 1UH	
		RESISTOR	
R731	1-216-019-00	METAL GLAZE 56 5% 1/10W	
R732	1-216-073-00	METAL GLAZE 10K 5% 1/10W	
R733	1-216-073-00	METAL GLAZE 10K 5% 1/10W	
**********			
	*1-633-600-11	LI-12 BOARD (Ref.No 6,000 Series) **********	
	1-550-104-32	HOLDER, BATTERY	
		CONNECTOR	
CN801	*1-565-876-11	PIN, CONNECTOR (PC BOARD) 4P	
		SWITCH	
S801	1-570-871-11	SWITCH, SLIDE (SUB/MAIN/ST)	
**********			
		TL-18 BOARD (Ref.No 2,000 Series) **********	
		DIODE	
D950	8-719-941-34	DIODE GL1HD51	
		RESISTOR	
R950	1-216-033-00	METAL GLAZE 220 5% 1/10W	
**********			
		TL-19 BOARD (Ref.No 4,000 Series) **********	
		DIODE	
D955	8-719-941-34	DIODE GL1HD51	
**********			
	1-628-060-12	FP-89 FLEXIBLE BOARD (Ref.No 7,000 Sries) **********	
	1-572-253-11	SWITCH, SLIDE (ENCODER)	
	3-728-869-02	HOLDER, SENSOR	

Ref.No	Part No.	Description	Remark
		DIODE	
D301	8-719-820-44	PHOTE COUPLER TLP907-0	
		TRANSISTOR	
Q301	8-729-906-48	TRANSISTOR EE-TP109	
		SWITCH	
S901	1-571-099-11	SWITCH (CASETTE DOWN)	
**********			
	1-628-061-12	FP-90 FLEXIBLE BOARD (Ref.No 8,000 Sries) **********	
	3-728-837-01	HOLDER, LED	
	3-728-869-02	HOLDER, SENSOR	
		DIODE	
D302	8-719-940-81	DIODE GL452S	
D303	8-719-820-44	PHOTE COUPLER TLP907-0	
		TRANSISTOR	
Q302	8-729-906-48	TRANSISTOR EE-TP109	
		SWITCH	
S902	1-572-298-11	SWITCH, PUSH (ME/MP, MP HG, REC PROOF)	
**********			
		MISCELLANEOUS **********	
⚠	1-451-357-12	DEFLECTION YOKE	
⚠	1-466-063-21	UNIT, DC-DC CONVERTER 1	
⚠	1-466-291-11	CONVERTER UNIT, DC-DC 2	
	1-503-293-00	SPEAKER	
	1-520-499-41	METER, LEVEL (L)	
	1-520-499-41	METER, LEVEL (R)	
	1-537-241-61	TERMINAL BOARD (BATTERY)	
	1-542-137-11	MICROPHONE, STEREO (C-2028)	
	1-542-138-11	MICROPHONE ASSY, NARATION	
	1-542-139-11	CAPSULE (C-1025), MICROPHONE	
	1-547-334-13	LENS, ZOOM (VCL-1108YB)	
	1-572-213-11	SWITCH, LEAF	
	1-575-436-11	WIRE, FLAT TYPE PVC (10 CORE)	
	1-575-441-11	CORD, CONNECTION (WITH 8P PLUG)	
	1-575-447-11	WIRE, FLAT TYPE 7P	
	1-575-448-11	WIRE, FLAT TYPE 8P	
	1-629-777-11	FP-203 FLEXIBLE BOARD	
	1-633-612-11	FP-213 FLEXIBLE BOARD	
	1-633-613-11	FP-215 FLEXIBLE BOARD	
	1-633-617-11	FP-241 FLEXIBLE BOARD	
	1-633-618-11	FP-311 FLEXIBLE BOARD	

The components identified by mark ⚠ or dotted line with mark ⚠ are critical for safety.
Replace only with part number specified.

Les composants identifiés par une marque ⚠ sont critiques pour la sécurité.
Ne les remplacer que par une pièce portant le numéro spécifé.

When indicating parts by reference number, please include the board name.

Ref.No	Part No.	Description	Remark
	1-808-505-12	SENSOR (DEW)	
	3-707-581-01	SW ASSY, F LIMIT	
	3-707-763-01	SENSOR ASSY, F	
	8-750-011-83	IU022BN-10C (CCD IMAGER)	
M901	A-7048-335-A	DRUM ASSY (DGU-59A-R)	
M902	8-835-331-01	MOTOR, DC U-22A (CAPSTAN)	
M903	A-7040-160-A	MOTOR ASSY, THREADING (LOADING)	
M904	3-707-583-01	METER ASSY, EE (IRIS)	
M905	3-707-580-01	MOTOR ASSY, PZ GEAR (ZOOM)	
M906	3-707-576-01	MOTOR ASSY, AF GEAR (FOCUS)	
S901	1-571-373-11	SWITCH, PUSH (ZOOM T/W)	
V901	⚠1-546-084-11	CATHODE-RAY TUBE, B/W (C1M50P45)	

****

ACCESSORIES AND PACKING MATERIALS
****

Part No.	Description	Remark
A-7019-204-A	VF-263 ASSY	
*3-704-281-01	BAG, PROTECTION (STANDARD)	
*3-742-861-01	CUSHION (UPPER)	
*3-742-862-01	CUSHION (LOWER)	
3-751-086-21	MANUAL, INSTRUCTION (ENGLISH/FRENCH/SPANISH) (US/Canadian)	
3-751-086-71	MANUAL, INSTRUCTION (ENGLISH/FRENCH/SPANISH) (E MODEL)	

**** ACCESSORIES AND PACKING MATERIALS (KIT) ****

1-465-395-11	COMMANDER, REMOTE (RMT-500)	
1-571-163-31	SWITCH, ANTENNA ,CHANGE (CABLE)(E MODEL)	
1-575-334-21	CORD, CONNECTION	
*1-575-335-21	CORD, CONNECTION	
*3-704-478-01	SHEET (B), BLIND	
3-712-595-21	BELT, SHOULDER	
3-742-852-01	COVER (A), JACK	
3-742-853-01	COVER (B), JACK	
*3-742-858-11	INDIVIDUAL, CARTON	
*3-742-860-01	SLEEVE, ACC KIT	
*3-742-863-01	CUSHION, ACC	
*3-742-864-01	LID, ACC CUSHION	
3-751-703-11	INSTRUCTION	
** AC-V50	AC POWER ADAPTOR	
*** NP-77H	BATTERY PACK	

Note

** MARK PARTS IS AVAILABLE FOR REPAIR SERVICE.
*** MARK PARTS IS AVAILABLE AS AN OPTIONAL ACCESSORY.

****

Ref.No	Part No.	Description	Remark

HARDWARE LIST
****

7-621-255-20	SCREW +P 2X4	
7-621-772-08	SCREW +B 2X3	
7-621-772-30	SCREW +B 2X6	
7-621-772-40	SCREW +B 2X8	
7-621-772-88	SCREW +B 2X16	
7-627-555-88	SCREW, PRECISION +P 1.4X1.8	
7-627-553-37	PRECISION SCREW +P 2X3 TYPE 3	
7-671-112-11	BALL, STEEL	
7-685-103-19	SCREW +P 2X5 TYPE2 NON-SLIT	
7-685-534-19	SCREW +BTP 2.6X8 TYPE2 N-S	
7-685-135-19	SCREW +BTP 2.6X10 TYPE2 N-S	
7-621-255-35	SCREW +BVTT 2X5 (S)	

****

The components identified by mark ⚠ or dotted line with mark ⚠ are critical for safety.
Replace only with part number specified.

Les composants identifiés par une marque ⚠ sont critiques pour la sécurité.
Ne les remplacer que par une pièce portant le numéro spécifé.

When indicating parts by reference number, please include the board name.

SECTION 7
CAMERA BLOCK ADJUSTMENTS

During adjustment, see the arrangement diagram for adjustment parts from page 318.

7-1. PRE-ADJUSTMENT PREPARATIONS (CAMERA BLOCK)

7-1-1. List of Servicing Jigs

- Oscilloscope
- Color monitor
- Regulated power supply (2 units)
- Vectorscope
- Adjusting screwdriver
- Electronic calculator
- Stopwatch

Ref. No.	Part Name	Part No.	Use
J-1	Filter (C14)	J-6080-058-A	Auto white balance confirmation
J-2	ND filter 0.4	J-6080-806-A	Iris adjustment, iris in/out adjustment (two used)
	ND filter 0.1	J-6080-807-A	Iris adjustment, max. gain adjustment Iris in/out adjustment Auto focus LLA adjustment (two used)
	ND filter 0.9	J-6080-833-A	Max. gain adjustment
	ND filter 1.0	J-6080-808-A	Max. gain adjustment, auto focus LLA adjustment (two used)
J-3	Pattern box PTB-500	J-6029-140-A	
J-4	Pattern box color chart	J-6020-250-A	
J-5	Extension cable K (4P 1.5 mm pitch)	J-6082-069-A	Connection of VC-55 and DI-21 boards
	Extension cable (6P 1.5 mm pitch)	J-6082-036-A	Connection of DC-DC converter and VC-54 board
	Extension cable M (2P 2 mm pitch)	J-6080-873-A	Connection of DC-DC converter and FU-70 board
	Extension cable K (4P 2 mm pitch)	J-6080-871-A	Connection of DC-DC converter and FU-70 board
	Extension cable (3P 2 mm pitch)	J-6080-872-A	Connection of PC-35 board and DC-DC converter (2)
J-6	Extension cable (4P 1.5 mm pitch)	J-6082-031-A	Connection of VC-54 and AF-47 boards Connection of FD-13 and SS-95 boards
	Extension cable (8P 1.25 mm pitch)	J-6082-032-A	Connection of SS-95 board and DC-DC converter
	Extension cable (5P 1.25 mm pitch)	J-6082-034-A	Connection of FD-13 and AF-47 boards
	Extension cable (7P 1.25 mm pitch)	J-6082-033-A	Connection of SS-95 board and DC-DC converter
J-7	Extension cable (2P 1.5 mm pitch)	J-6080-912-A	Connection of VI-66 and DI-21 boards
J-8	Extension cable (22P 1 mm pitch)	J-6082-037-A	Connection of PC-35 and SS-95 boards
	Extension cable (18P 1 mm pitch)	J-6082-030-A	Connection of SS-95 and VC-55 boards
J-9	Camera securing jig	J-6080-894-A	
J-10	Siemens star	J-6080-875-A	Flange back adjustment
J-11	Adjustment remote controller	J-6082-053-A	
J-12	AF microprocessor data reading jig	J-6082-025-A	

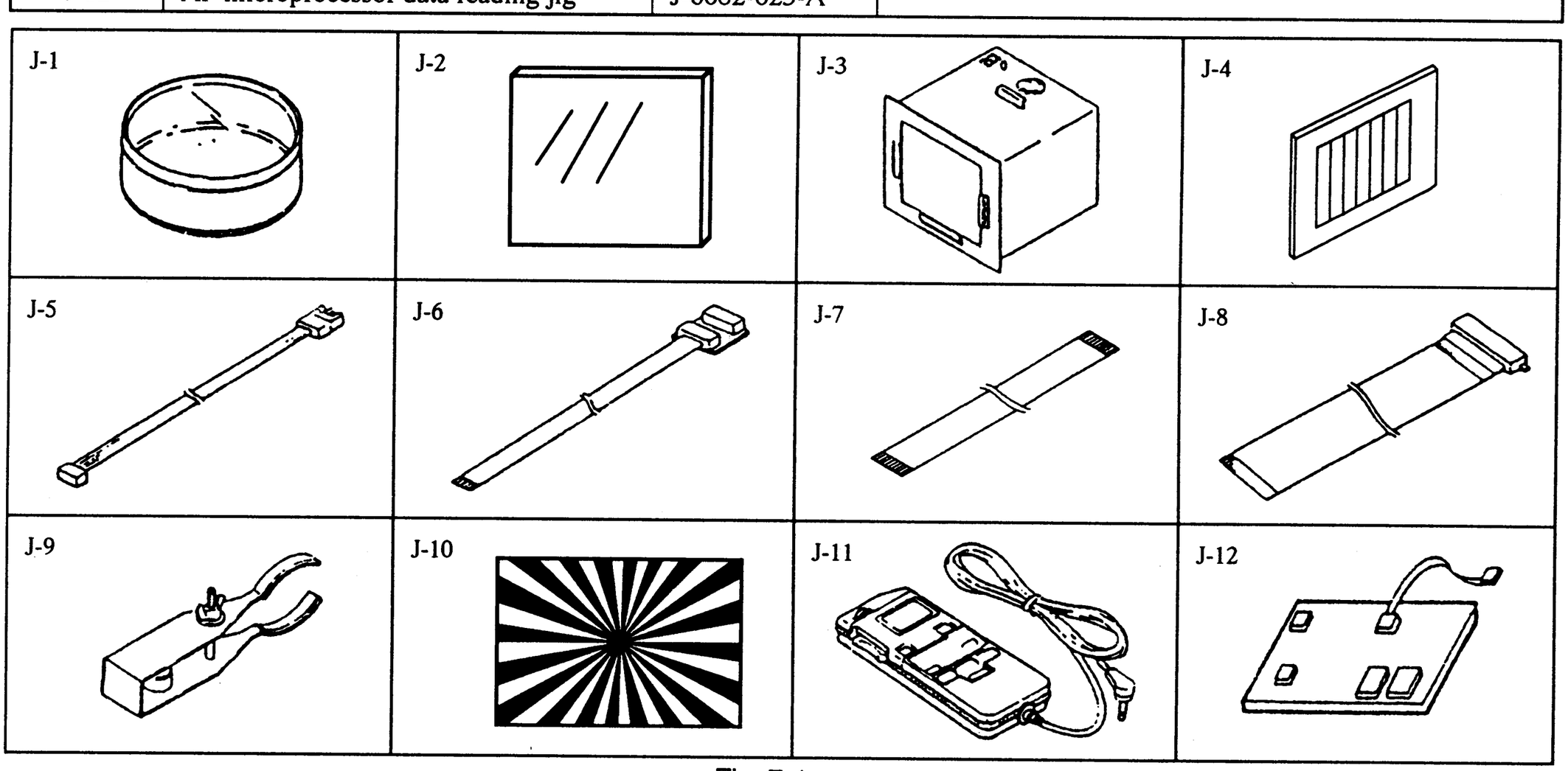

Fig. 7-1.

7-1-2. Preparations

Note: Refer to "SECTION 2 DISASSEMBLY" for details on removal of the cabinet and various boards.

1) Set up the camera block as shown in Fig. 7-2.
2) Connect the camera and video blocks using extension cables, and the various devices for adjustment as shown in Fig. 7-3.
3) The EVF (electronic viewfinder) is needed for confirmation of the white balance mode and shutter speed. This can confirmed on the monitor screen by turning on DATA SCREEN (ON/OFF by S741 on VK-2 board).
4) The left cabinet block is not needed for adjustment except VJ-6 board. If it will be obstacle to the adjustments, remove it by disconnecting the following connectors. (Only VJ-6 board is required for connecting the adjustment remote controller or EVF. Remove the set screw to remove from the cabinet.)
   1. CN861 on the HJ-5 board
   2. CN821 on the SW-113 board
      Note: For camera stand-by states, connect Pins ① and ③ of CN821 with diode (1SS119 or the like). (Pin ① as a cathode, refer to Fig. 7-3.)
      Or connect to the FD-13 board with an external cable.
   3. CN551 on the DM-23 board

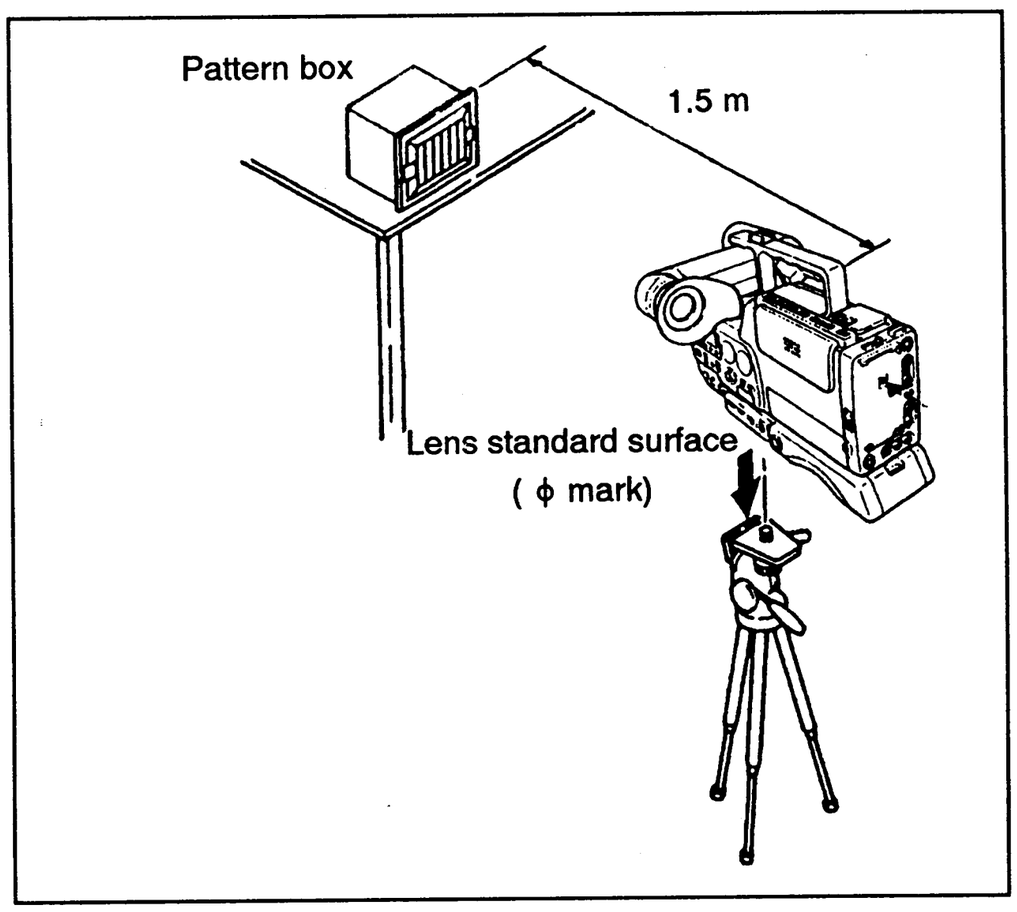

Fig. 7-2.

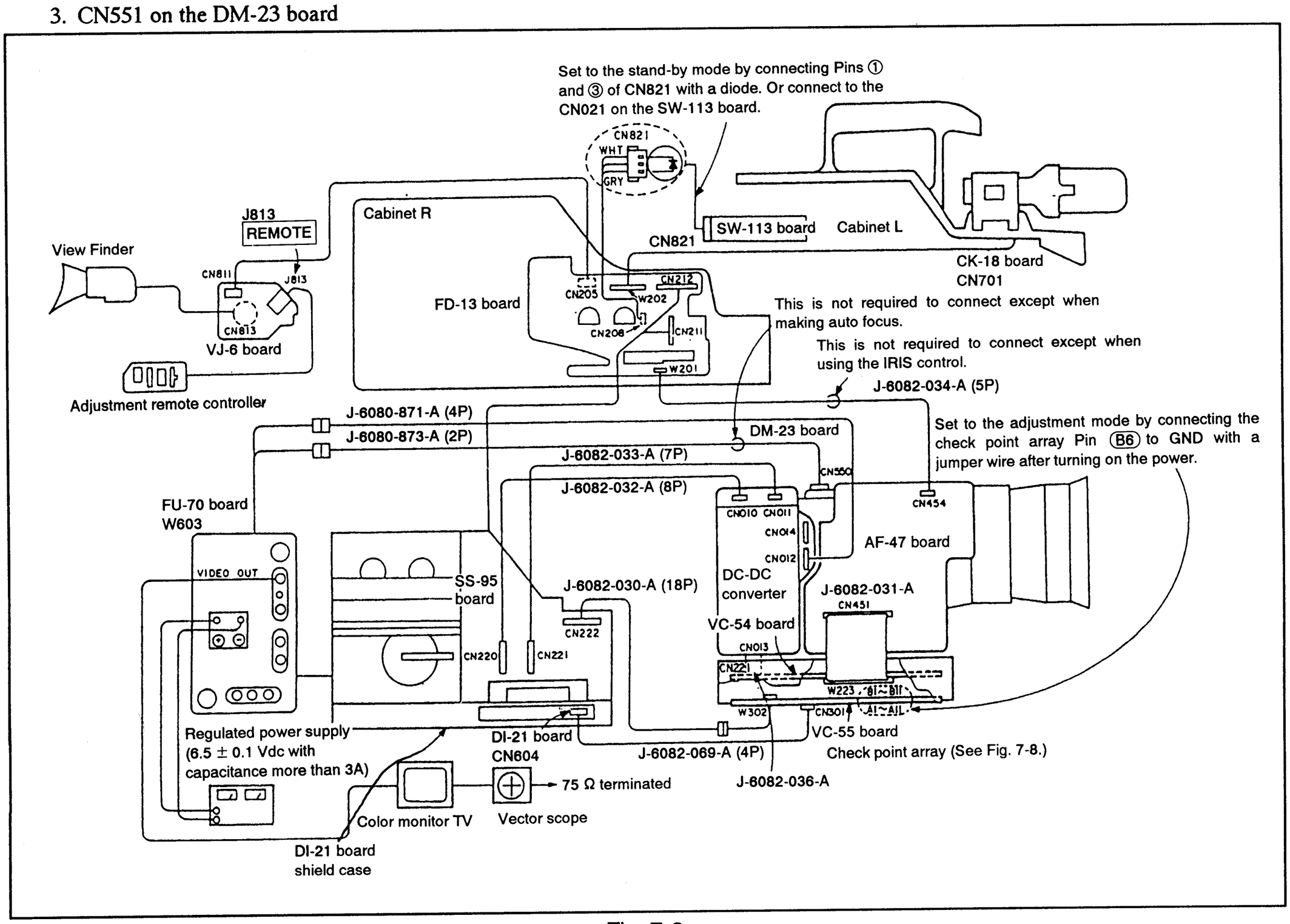

Fig. 7-3.

7-1-3. Precautions

1. Setting of switches

Unless otherwise specified, the switches are set to the following positions and adjustment is made without a cassette inserted.

- Camera block

1. CAMERA/VTR power switch
   (S743 on VK-2 board).....CAMERA
2. +VTR switch (S745 on VK-2 board).....ON
3. STANDBY switch (S822 on SW-113 board).....STANDBY
4. AUTO LOCK switch (S205 on FD-13 board).....OFF
5. FOCUS switch (S206 on FD-13 board).....MANUAL
6. WHITE BALANCE switch
   (S209 on FD-13 board)..... ☼ (indoors)
7. IRIS control (RV201 on FD-13 board).....Mechanical center
8. SHUTTER switch
   (S211 on FD-13 board).....NORMAL (1/60)
9. SENS switch (S208 on FD-13 board).....NORMAL
10. DIGITAL EFECT switch (S761 on FD-13 board).....OFF

2. Adjustment order

As a rule, the adjustments are performed in the listed order.

3. Subjects

1) Color bar chart (standard picture frame)
   When performing adjustment using the color bar chart, adjust the picture frame shown in Fig. 7-4.
2) White pattern (standard picture frame)
   Remove the color bar chart from the pattern box and use the zoom lever so that the white pattern has the same size and is the same position as the color bar chart (standard picture frame).
3) All white pattern
   Remove the color bar chart from the pattern box and turn the zoom lever to its TELE-end position.
4) Siemens star (J-6080-875-A)
   Adjust the direction of the camera so that center of the Siemens star is lined up with the center of the monitor screen on the monitor TV screen.

Color bar chart standard picture frame

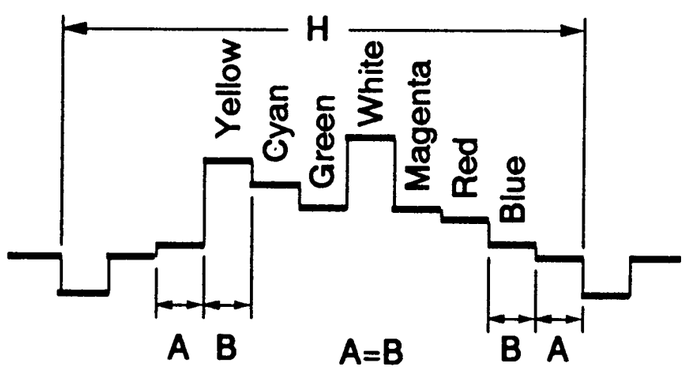

Fig. a (Pin ③ of CN301 (VC-55 board), Output waveform)

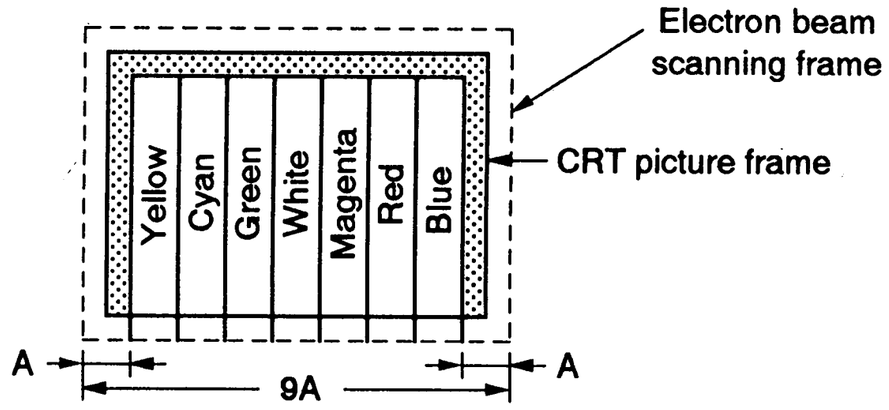

Fig. b (Picture on monitor TV)

Adjust the zooming and direction of the camera to obtain the output waveform shown in Fig. a and the monitor TV picture shown in Fig. b.

Fig. 7-4.

5) High luminance pattern
   Create the high luminance pattern as shown in Fig. 7-5, and adjust the picture frame shown in Fig. 7-6.

High luminance pattern

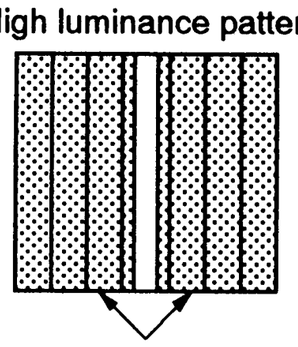

Attach black paper over all sections of the pattern except for half of the white bar of the color bar chartt. Display the picture on the monitor with the standard picture frame.

Fig. 7-5.

High luminance pattern

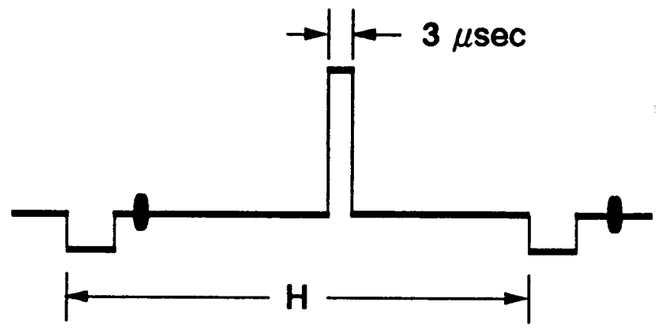

Fig. a (Pin ③ of CN301 (VC-55 board), Output waveform)

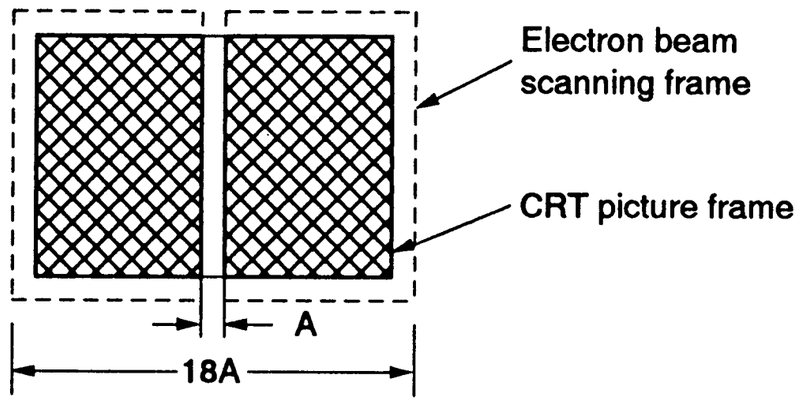

Fig. b (Picture on monitor TV)

Adjust the zooming and direction of the camera to obtain the output waveform shown in Fig. a and the monitor TV picture shown in Fig. b.

Fig. 7-6.

7-1-4. Adjustment Remote Controller

An EVR (electronic variable resistor) is used as the adjustment element for the camera block, replacing the conventional semi-fixed resistor. The EVR is controlled by the EVR/AWB microprocessor (IC301 on VC-55 board). This microprocessor reads the data written in the nonvolatile memory of the microprocessor and sends it to the EVR. The EVR D-A-converts this data (8 bits for each adjustment point) and creates the adjustment voltage.

Thus, it is necessary to change the adjustment data written in the nonvolatile memory when adjusting the camera block, and the adjustment remote controller is used for this purpose.

The adjustment remote controller performs bidirectional communications with the camera block microprocessor using the remote control signal lines (LANC). Adjustment addresses and adjustment data up/down commands are sent to the camera block microprocessor from the adjustment remote controller. Adjustment addresses and adjustment data are sent from the camera block microprocessor to the adjustment remote controller.

1. Use of adjustment remote controller

Solder a lead wire or the like to Pin (B6) (refer to 7-1-5.) of the check point array on the VC-55 board.

1) Connect the adjustment remote controller to the remote terminal (J813 on JV-6 board). (Set HOLD switch of the adjustment remote controller to the HOLD position (SERVICE position).)
2) Turn on the power of the main unit.
3) Connect Pin (B6) ($\overline{\text{CAM ADJ}}$) of the check point array to GND using a jumper wire.
   (This connection causes the EVR/AWB microprocessor to cease normal remote control operation and to begin adjustment exclusive communications.)
   Note: Be sure to make this connection only after turning on the power. The following will be displayed on the LCD of the adjustment remote controller if the connection is normal. (Adjustment data varies according to the unit.)

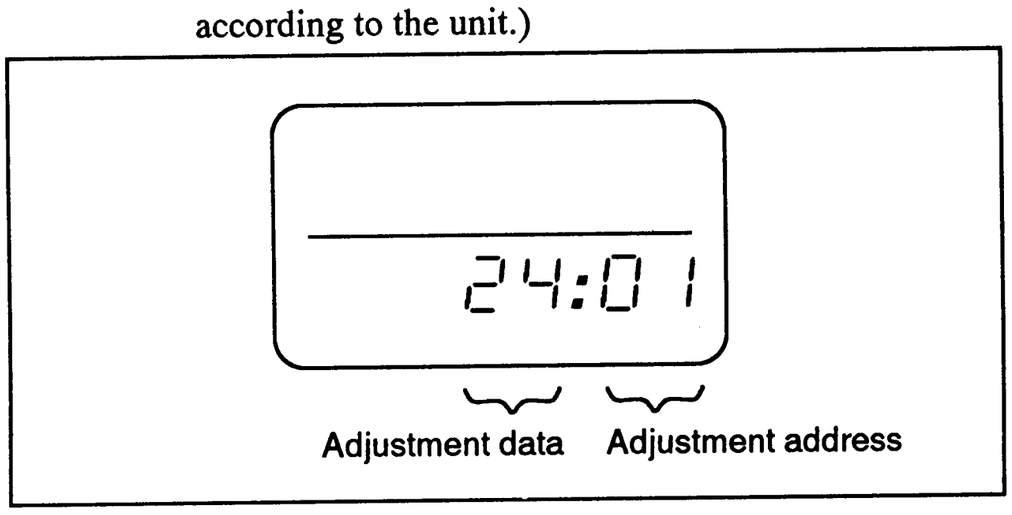

Fig. 7-7.

4) Designates the desired adjustment address using the adjustment remote controller. The adjustment address is incremented by pressing FF (▶▶) button and decremented by pressing REW (◀◀) button. (The adjustment address is indicated in decimal, and there are 89 addresses from 01 to 89. The adjustment address corresponds to the EVR (IC305 on VC-55 board, IC003 on CP-20 board, IC454 on AF-47 board) output terminals. Refer to Table 7-3. for the adjustment contents of the various addresses.)
5) Perform adjustment by incrementing or decrementing the adjustment data.
   The adjustment data is incremented by pressing PLAY (▶) button. The adjustment data is decremented by pressing STOP (■) button.
   - The adjustment address is indicated in hexadecimal. There are 256 values from 00 to FF.

Hexadecimal	0	1	2	3	4	5	6	7	8	9	A	B	C	D	E	F
LCD Indication	0	1	2	3	4	5	6	7	8	9	A	b	c	d	E	F
Decimal equivalent	0	1	2	3	4	5	6	7	8	9	10	11	12	13	14	15

Table 7-1.

   - The adjustment data corresponds to the EVR (IC305 on VC-55 board, IC003 on CP-20 board, IC454 on AF-47 board) output voltage, and is as follows.

Adjustment data ( ) is decimal equivalent	EVR output voltage
FF (=255)	Maximum value (approx. 5 Vdc)
F0 (=240)	
E0 (=224)	
D0 (=208)	
C0 (=192)	
B0 (=176)	
A0 (=160)	
90 (=144)	
80 (=128)	Center value (approx. 2.5 Vdc)
70 (=112)	
60 (=96)	
50 (=80)	
40 (=64)	
30 (=48)	
20 (=32)	
10 (=16)	
00 (=0)	Minimum value (approx. 0 Vdc)

Table 7-2.

6) The adjustment address is changed using FF (▶▶) button or REW (◀◀) button to store the adjustment data in the nonvolatile memory of EVR/AWB microprocessor (IC301 on VC-55 board).
   (The new adjustment data is not stored in the nonvolatile memory unless this operation is performed.)
7) There is the function that the last error (last memory emergency) occurred during using the unit can be stored even if the power is turned off. The emergency also cleared by COUNTER RESET button.

2. Precautions on use of adjustment remote controller

In order to prevent the correct adjustment data from erasure due to miss operation of adjustment remote controller, we recommend to take all adjustment data down before adjustment and record the new adjustment data after completing each adjustment item.

3. Adjustment address table

Adjustment Address	Adjustment Voltage Output Terminal	Adjustment Item	Remarks	Adjustment Data Memo Column
01	Pin ⑱ of IC003 (CP-20 board)	DELTA R	Auto white balance adjustment	
02	Pin ⑲ of IC003 (CP-20 board)	DELTA B		
03	Pin ② of IC003 (CP-20 board)	TITLE PEDESTAL		
04	Pin ③ of IC003 (CP-20 board)	C-PED	Fixed at "95"	95
05	Pin ④ of IC003 (CP-20 board)	R–Y GAIN	Color reproduction (gain) adjustment	
06	Pin ⑤ of IC003 (CP-20 board)	B–Y GAIN		
07	Pin ⑥ of IC003 (CP-20 board)	R–Y HUE	Color reproduction (hue) adjustment	
08	Pin ⑦ of IC003 (CP-20 board)	B–Y HUE		
09	Pin ⑧ of IC003 (CP-20 board)	TITLE A/D		
10	Pin ⑨ of IC003 (CP-20 board)	CHARACTER		
11	Pin ⑫ of IC003 (CP-20 board)	R GAIN	Pre-white balance adjustment	
12	Pin ⑬ of IC003 (CP-20 board)	B GAIN		
13	Pin ⑱ of IC305 (VC-55 board)	C1 GAIN	Chroma matrix adjustment	
14	Pin ⑲ of IC305 (VC-55 board)	Y1 GAIN	Y matrix adjustment	
15	Pin ② of IC305 (VC-55 board)	CHROMA LEVEL		
16	Pin ③ of IC305 (VC-55 board)	BURST LEVEL		
17	Pin ④ of IC305 (VC-55 board)	HUE CONT	Not used	
18	Pin ⑤ of IC305 (VC-55 board)	SYNC LEVEL		
19	Pin ⑥ of IC305 (VC-55 board)	SET UP		
20	Pin ⑦ of IC305 (VC-55 board)	WHITE CLIP		
21	Pin ⑧ of IC305 (VC-55 board)	Y LEVEL		
22	Pin ⑨ of IC305 (VC-55 board)	APERTURE		
23	Pin ⑫ of IC305 (VC-55 board)	YH LEVEL		
24	Pin ⑬ of IC305 (VC-55 board)	C2 GAIN		
25	Pin ⑱ of IC454 (AF-47 board)	IRIS		
26	Pin ⑲ of IC454 (AF-47 board)	FOCUS SPEED		
27	Pin ② of IC454 (AF-47 board)	HALL OFFSET		
28	Pin ③ of IC454 (AF-47 board)	MAX GAIN		
29	Pin ④ of IC454 (AF-47 board)	———		———
30	Pin ⑤ of IC454 (AF-47 board)	V SUB 1		
31	Pin ⑥ of IC454 (AF-47 board)	V SUB 2		
32	Pin ⑦ of IC454 (AF-47 board)	AGC		
33		———		———
34		———		———
35		———		———
36		———		———

Table 7-3. (1)

<table>
<tr><th>Adjustment Address</th><th>Adjustment Voltage Output Terminal</th><th>Adjustment Item</th><th>Remarks</th><th>Adjustment Data Memo Column</th></tr>
<tr><td>37</td><td></td><td>MODE</td><td>The following adjustment modes are selected by changing the adjustment data.
<table><tr><th>Adjustment data</th><th>Adjustment mode</th></tr><tr><td>00</td><td>Release</td></tr><tr><td>01</td><td>Focus hunting</td></tr><tr><td>03</td><td>Zoom position</td></tr><tr><td>05</td><td>HALL, IRIS CLOSE</td></tr><tr><td>07</td><td>HALL, IRIS OPEN</td></tr><tr><td>09</td><td>HALL IN/OUT threshold</td></tr><tr><td>0B</td><td>Auto-focus LLA</td></tr><tr><td>FD</td><td>Auto-focus filter fixed at FA</td></tr><tr><td>FF</td><td>Auto-focus filter fixed at FH</td></tr></table></td><td>00</td></tr>
<tr><td>38</td><td></td><td>LLA</td><td>Auto-focus LLA adjustment</td><td></td></tr>
<tr><td>39</td><td></td><td>MACRO</td><td></td><td></td></tr>
<tr><td>40</td><td></td><td>IN/OUT DOOR</td><td>Fixed at 00</td><td>00</td></tr>
<tr><td>41</td><td></td><td>LOW CONT</td><td rowspan="5">Auto-focus adjustment</td><td></td></tr>
<tr><td>42</td><td></td><td>FA-SM</td><td></td></tr>
<tr><td>43</td><td></td><td>FH-SM</td><td></td></tr>
<tr><td>44</td><td></td><td>FA-B</td><td></td></tr>
<tr><td>45</td><td></td><td>FH-B</td><td></td></tr>
<tr><td>46</td><td></td><td>————</td><td></td><td>————</td></tr>
<tr><td>47</td><td></td><td>GATE-H</td><td>Auto-focus adjustment</td><td></td></tr>
<tr><td>48</td><td></td><td>————</td><td></td><td>————</td></tr>
<tr><td>49</td><td></td><td>THR STEP</td><td>Auto-focus adjustment</td><td></td></tr>
<tr><td>50</td><td></td><td>————</td><td></td><td>————</td></tr>
<tr><td>51</td><td></td><td>BACK RUSH</td><td>Fixed at 02</td><td>02</td></tr>
<tr><td>52</td><td></td><td>FHW</td><td>Auto-focus adjustment</td><td></td></tr>
<tr><td>53</td><td></td><td>————</td><td></td><td>————</td></tr>
<tr><td>54</td><td></td><td>AGC W</td><td rowspan="2">Auto-focus adjustment</td><td></td></tr>
<tr><td>55</td><td></td><td>AGC B</td><td></td></tr>
<tr><td>56</td><td></td><td>BASE-H</td><td>Fixed at 18</td><td>18</td></tr>
<tr><td>57</td><td></td><td>IRIS IN</td><td rowspan="2">IRIS IN/OUT adjustment</td><td></td></tr>
<tr><td>58</td><td></td><td>IRIS OUT</td><td></td></tr>
<tr><td>59</td><td></td><td>START R</td><td>Preset R CONT data for reset start</td><td>30</td></tr>
<tr><td>60</td><td></td><td>START B</td><td>Preset B CONT data for reset start</td><td>41</td></tr>
<tr><td>61</td><td></td><td>BTM SLP R</td><td>Fixed at 23</td><td>23</td></tr>
<tr><td>62</td><td></td><td>BTM SLP B</td><td>Fixed at 00</td><td>00</td></tr>
<tr><td>63</td><td></td><td>MDL SLP R</td><td>Fixed at 00</td><td>00</td></tr>
<tr><td>64</td><td></td><td>MDL SLP B</td><td>Fixed at 00</td><td>00</td></tr>
<tr><td>65</td><td></td><td>TOP SLP R</td><td>Fixed at 10</td><td>10</td></tr>
<tr><td>66</td><td></td><td>TOP SLP B</td><td>Fixed at 01</td><td>01</td></tr>
</table>

Table 7-3. (2)

<table>
<tr><th>Adjustment Address</th><th>Adjustment Voltage Output Terminal</th><th>Adjustment Item</th><th>Remarks</th><th>Adjustment Data Memo Column</th></tr>
<tr><td>67</td><td></td><td>KEIKO R</td><td>Fixed at 41</td><td>41</td></tr>
<tr><td>68</td><td></td><td>KEIKO B</td><td>Fixed at 00</td><td>00</td></tr>
<tr><td>69</td><td></td><td>BTM UP</td><td>Fixed at 45</td><td>45</td></tr>
<tr><td>70</td><td></td><td>BTM DWN</td><td>Fixed at 33</td><td>33</td></tr>
<tr><td>71</td><td></td><td>MDL UP</td><td>Fixed at 7C</td><td>7C</td></tr>
<tr><td>72</td><td></td><td>MDL DWN</td><td>Fixed at 69</td><td>69</td></tr>
<tr><td>73</td><td></td><td>TOP UP</td><td>Fixed at 8F</td><td>8F</td></tr>
<tr><td>74</td><td></td><td>TOP DWN</td><td>Fixed at 6C</td><td>6C</td></tr>
<tr><td>75</td><td></td><td>KEIKO DWN</td><td>Fixed at 9E</td><td>9E</td></tr>
<tr><td>76</td><td></td><td>R DWN LMT</td><td rowspan="4">Auto white balance adjustment</td><td></td></tr>
<tr><td>77</td><td></td><td>B UP LMT</td><td></td></tr>
<tr><td>78</td><td></td><td>R OUT LMT</td><td></td></tr>
<tr><td>79</td><td></td><td>B OUT LMT</td><td></td></tr>
<tr><td>80</td><td></td><td>R OUTDOOR</td><td rowspan="2">Auto white balance adjustment</td><td></td></tr>
<tr><td>81</td><td></td><td>B OUTDOOR</td><td></td></tr>
<tr><td>82</td><td></td><td>RESET TM</td><td>Fixed at 3C</td><td>3C</td></tr>
<tr><td>83</td><td></td><td>DELAY TM</td><td>Auto white balance tracking speed.
Fixed at 10</td><td>10</td></tr>
<tr><td>84</td><td></td><td>FAST TM</td><td>Fixed at 20</td><td>20</td></tr>
<tr><td>85</td><td></td><td>CAM DDS 0</td><td>Fixed at 00</td><td>00</td></tr>
<tr><td>86</td><td></td><td>CAM DDS 1</td><td>Fixed at 00</td><td>00</td></tr>
<tr><td>87</td><td></td><td>CAM DDS 2</td><td>Fixed at 00</td><td>00</td></tr>
<tr><td>88</td><td></td><td>CAM ALN</td><td>Fixed at 00</td><td>00</td></tr>
<tr><td>89</td><td></td><td>AWB mode</td><td>The following auto white balance adjustment modes are selected by changing the adjustment data.
<table><tr><th>Adjustment data</th><th>Adjustment mode</th></tr><tr><td>00</td><td>Release, initial setting</td></tr><tr><td>10</td><td>Auto white balance value output
(within tracking zone)</td></tr><tr><td>E0</td><td>Auto white balance adjustment possible</td></tr><tr><td>F0</td><td>Auto white balance tracking zone evaluation invalid</td></tr></table></td><td>00</td></tr>
</table>

Table 7-3. (3)

7-1-5. Check Point Array

Almost all of the measurement points for camera block adjustment are located in the check point array on the VC-55 board. Solder short lead wires onto the terminals needed for adjustment and connect an oscilloscope, etc. The terminal numbers and signal names for the check point array are shown in Table 7-4.

Pin No.	Signal Name	Pin No.	Signal Name
A1	G OUT	B1	ID
A2	N.C	B2	N.C
A3	N.C	B3	Y (LPF) OUT
A4	Y0	B4	V SUB
A5	Y1	B5	AW ADJ
A6	C0	B6	$\overline{\text{CAM ADJ}}$
A7	C1	B7	MODE
A8	N.C	B8	N.C
A9	YH	B9	SHUTTER EN
A10	N.C	B10	GND
A11	N.C	B11	CCD OUT

* N.C. .....no connection

Table 7-4.

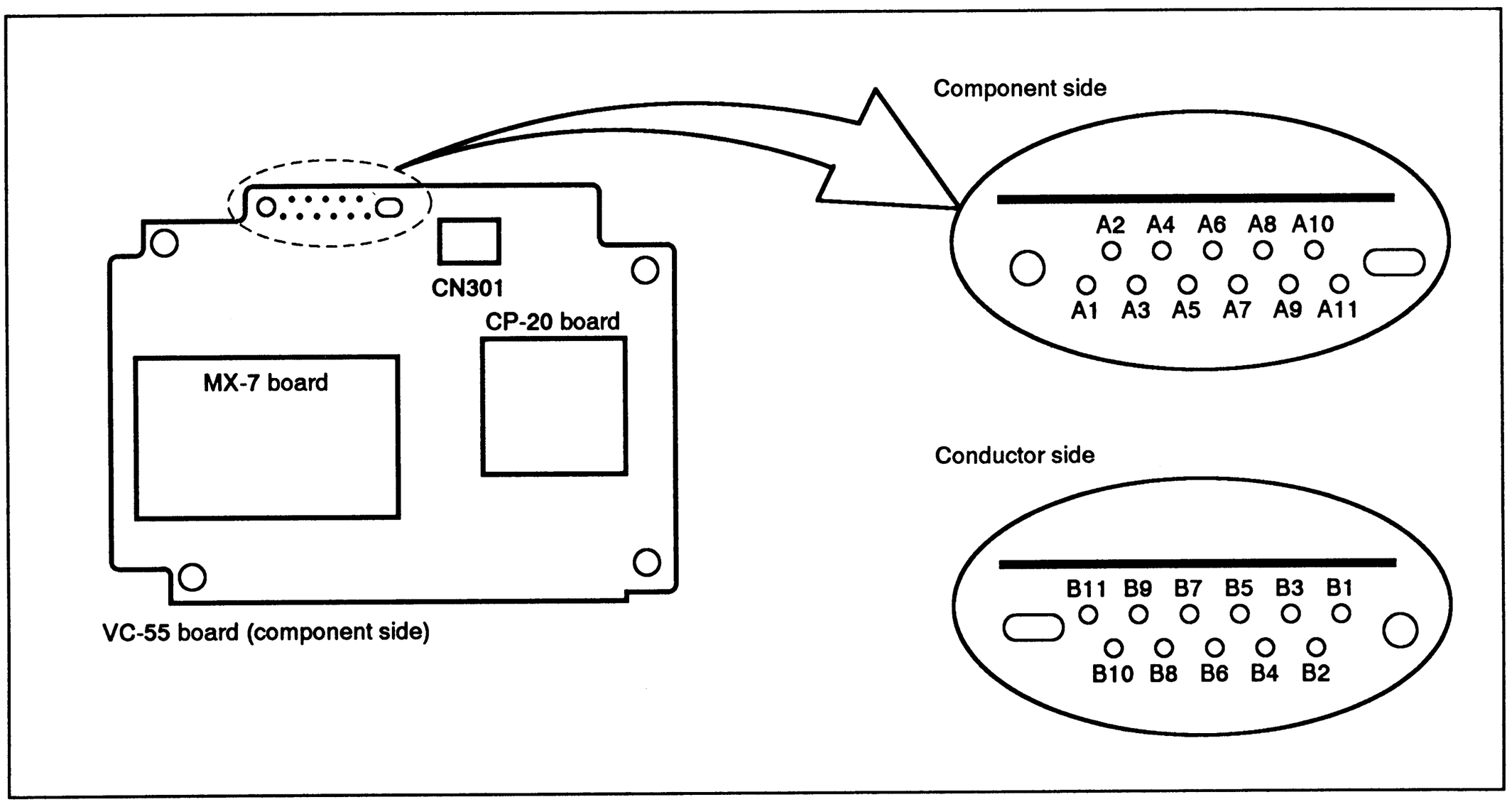

Fig. 7-8.

7-1-6. AF Microcomputer Data Reading Jig

The AF microprocessor data reading jig converts the serial data (output data varies according to hall (iris) state, focus state, focus motor speed, zoom ring position, etc.) for adjustment output from the AF microprocessor (IC452 on AF-47 board) into a 2-digit hexadecimal code and displays it on the LED.

[Connections]

Connect as shown in the diagram below.

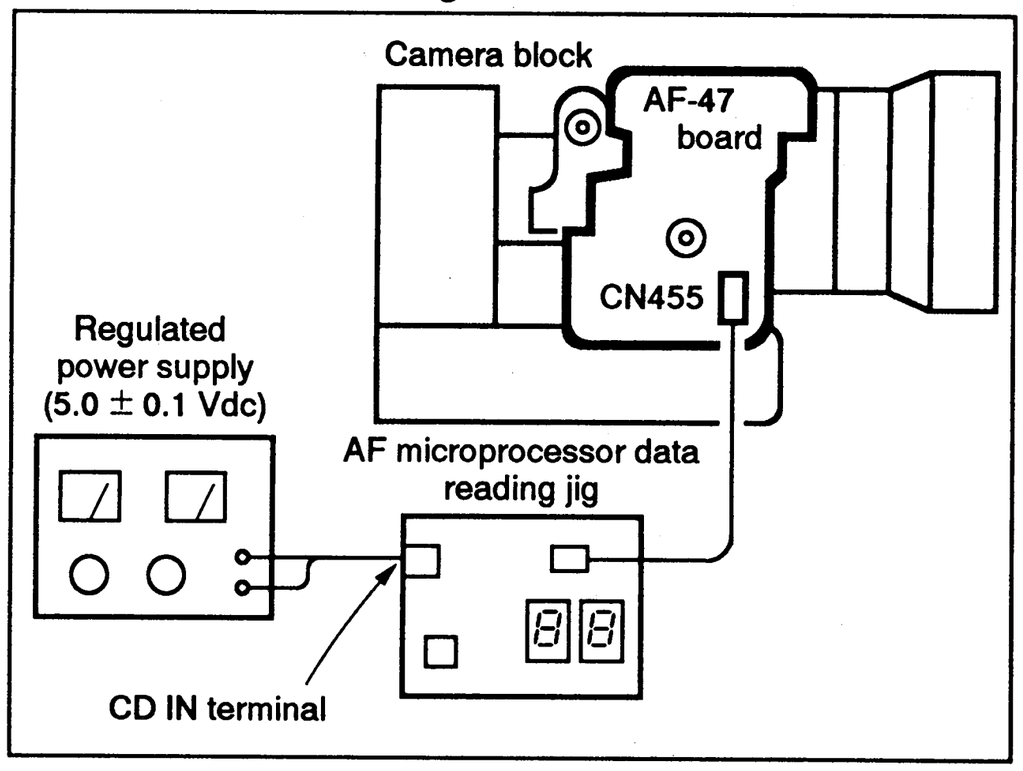

Fig. 7-9.

7-1-7. Data Processing

For some of the adjustment items, calculation from the data (hexadecimal) indicated on the AF microprocessor data reading jig and adjustment remote controller is needed to obtain the adjustment data.

In these cases, convert the hexadecimal values to decimal once before calculation and reconvert the result to hexadecimal to obtain the adjustment data. A hexadecimal-decimal conversion table is shown in Table 7-5.

Hexadecimal-Decimal Conversion Table

Hexadecimal lower digit / Hexadecimal upper digit	0	1	2	3	4	5	6	7	8	9	A (A)	B (b)	C (c)	D (d) ②	E (E)	F (F)
0	0	1	2	3	4	5	6	7	8	9	10	11	12	13	14	15
1	16	17	18	19	20	21	22	23	24	25	26	27	28	29	30	31
2	32	33	34	35	36	37	38	39	40	41	42	43	44	45	46	47
3	48	49	50	51	52	53	54	55	56	57	58	59	60	61	62	63
4	64	65	66	67	68	69	70	71	72	73	74	75	76	77	78	79
5	80	81	82	83	84	85	86	87	88	89	90	91	92	93	94	95
6	96	97	98	99	100	101	102	103	104	105	106	107	108	109	110	111
7	112	113	114	115	116	117	118	119	120	121	122	123	124	125	126	127
8	128	129	130	131	132	133	134	135	136	137	138	139	140	141	142	143
9	144	145	146	147	148	149	150	151	152	153	154	155	156	157	158	159
A(A)	160	161	162	163	164	165	166	167	168	169	170	171	172	173	174	175
① B(b)	176	177	178	179	180	181	182	183	184	185	186	187	188	189	190	191
C(c)	192	193	194	195	196	197	198	199	200	201	202	203	204	205	206	207
D(d)	208	209	210	211	212	213	214	215	216	217	218	219	220	221	222	223
E(E)	224	225	226	227	228	229	230	231	232	233	234	235	236	237	238	239
F(F)	240	241	242	243	244	245	246	247	248	249	250	251	252	253	254	255

Note: ( ) is the indication on the jig or adjustment remote controller.

Example: In case the indication on the jig or adjustment remote controller is BD (b d).
As the upper digit of hexadecimal is B (b) and the lower digit is D (d), the decimal value is obtained from the intersection "189" of ① and ② in the above table.

Table 7-5.

7-2. CAMERA SYSTEM ADJUSTMENT

7-2-1. Flange Back Adjustment

Subject	Siemens star (2m directly in front of lens reference surface (" ϕ " mark))
Measurement Point	Check with a monitor TV
Measuring Instrument	
Adjusting Element	Flange back adjusting pin
Tools	Phillips screwdriver, slotted screwdriver

Adjusting method:

1) Set FOCUS switch (S206 on FD-13 board) to the MANUAL mode.
2) Position a Siemens star 2 m directly in front of the lens reference plane (See Fig. 7-2.).
3) Adjust the camera block position to match the center of the Siemens star imaged on the monitor TV screen coincide with the monitor screen center.
4) Check to assure the smooth motion of the lens zoom lever to both its WIDE-end position (11 mm) and TELE-end position (88 mm), and then set it at its WIDE-end position. (In this process, also check the monitor image to assure proper zooming operation.)
5) Adjust IRIS control (RV201 on FD-13 board) to set the lens to full aperture. At this time, adjust the illumination on the Siemens star or place an ND filter over the lens, and confirm that the proper image is displayed on the monitor TV screen.
6) Set the lens focus index at the center of "2".

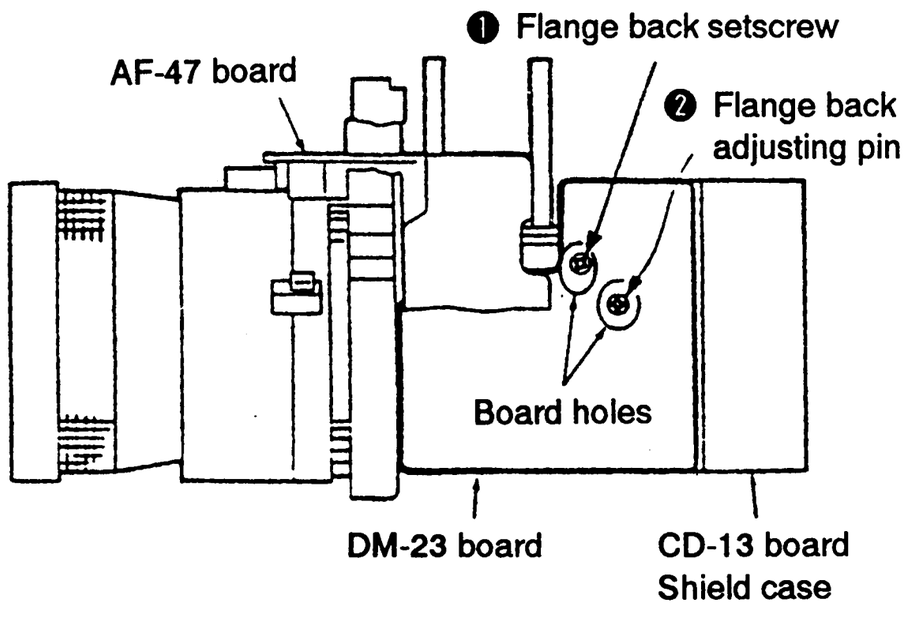

Fig. 7-10.

7) Loosen flange back setscrew ❶ with a Phillips screwdriver. (See Fig. 7-10.)
8) By turning the flange back adjusting pin ❷ while watching the monitor screen, attain the optimum definition of a wedge at the Siemens star center on the screen. (Turn it a few times to the left and right to ensure optimum definition.)
   Note: Do not turn the adjusting pin excessively in either direction.
9) While holding the flange back adjusting Pin ❷ to prevent further rotation, tighten the flange back setscrew ❶.

10) With the zoom lever fixed at its WIDE-end position, turn the focus ring and set it to the position that provides the best focus of the wedge. Check to assure the focusing index position is within the range shown in Fig. 7-11. Also, rotate the focus ring to the close (1.1m) and far (∞) extremes and confirm that the wedge is no longer in focus at their position.

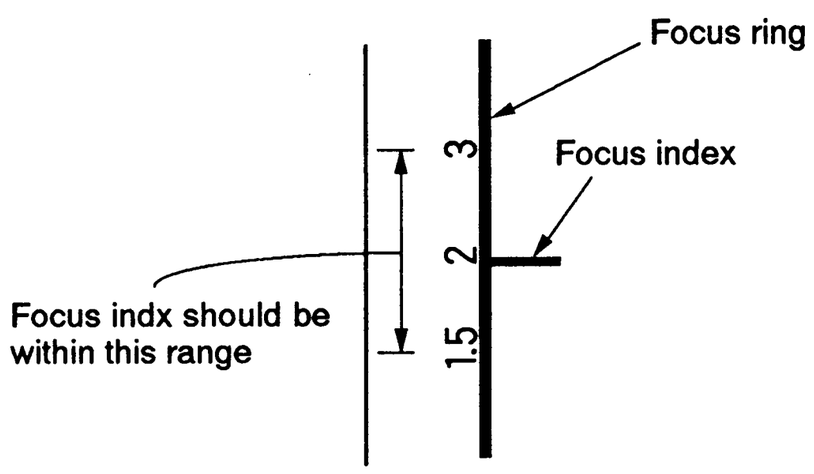

Fig. 7-11.

11) Fix the zoom lever at its TELE-end position.
12) Turn the focus ring and stop at the position that provides the best focus of the wedge.
    Confirm that the focus index is within ± 1.5 mm of center of "2".

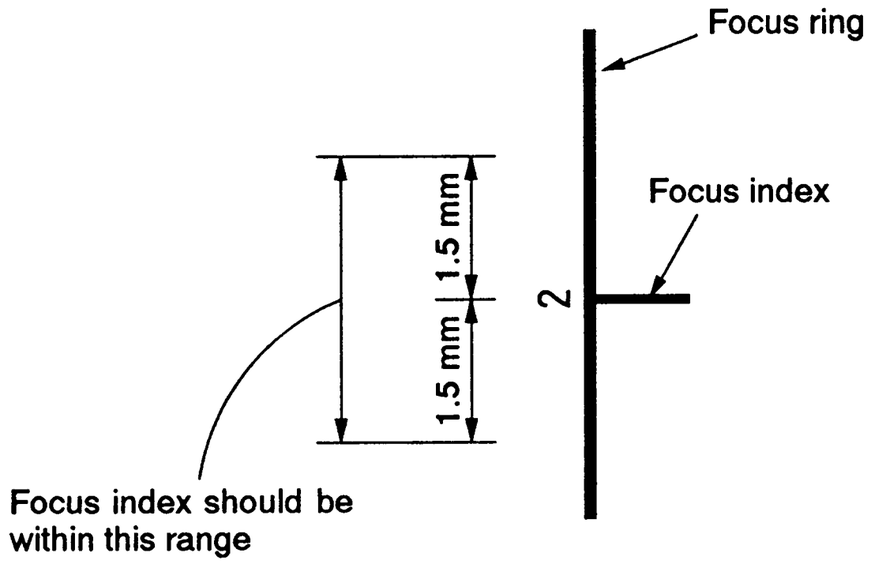

Fig. 7-12.

7-2-2. Power Supply Check (DC-DC Converter)

Measuring Instrument	Digital voltmeter
CAM 5V check	
Measurement Point	Pin ⑥ of CN013
Specified Value	4.9 ± 0.15 Vdc
CAM 4V check	
Measurement Point	Pin ② of CN013
Specified Value	6.6 ± 0.33 Vdc
CAM 15V check	
Measurement Point	Pin ③ of CN013
Specified Value	15.0 ± 0.45 Vdc
CAM 30V check	
Measurement Point	Pin ⑤ of CN013
Specified Value	26.0 ± 1.6 Vdc

Checking method:

1) Each power supply voltage should be at its specified level.

7-2-3. EVR Initial Settings

Set to the following initial settings of the adjustment data only when the EVR/AWB microprocessor (IC301 on VC-55 board) was replaced.
(The microprocessor data stored before replacement is also available.)

Adjustment Address	Adjustment Data Initial Value	Adjustment Address	Adjustment Data Initial Value	Adjustment Address	Adjustment Data Initial Value
01 (DELTA R)	30~70	51 (BACK RUSH)	02	71 (MDL UP)	7C
02 (DELTA B)	30~70	56 (BASE-H)	18	72 (MDL DWN)	69
04 (C-PED)	95	59 (START R)	30	73 (TOP UP)	8F
20 (WHITE CLIP)	FF	60 (START B)	41	74 (TOP DWN)	6C
21 (Y LEVEL)	70	61 (BTM SLP R)	23	75 (KEIKO DWN)	9E
25 (IRIS)	68	62 (BTM SLP B)	00	76 (R DWN LMT)	
28 (MAX GAIN)	B0	63 (MDL SLP R)	00	78 (R OUT LMT)	
30 (V SUB 1)	80	64 (MDL SLP B)	00	82 (R TM)	3C
31 (V SUB 2)	80	65 (TOP SLP R)	10	83 (D TM)	10
32 (AGC)	FF	66 (TOP SLP B)	01	84 (F TM)	20
37 (MODE)	00	67 (KEIKO R)	41	88 (CAM ALN)	00
38 (LLA)	3F	68 (KEIKO B)	00	89 (AWB MODE)	00
39 (MACRO)	00	69 (BTM UP)	45		
40 (IN/OUT DOOR)	00	70 (BTM DWN)	33		

Table 7-6.

Adjusting method:

1) Set the adjustment data at the various adjustment addresses to the initial values using the adjustment remote controller.
2) Change the adjustment address to store the last adjustment data in the memory.

7-2-4. V SUB Adjustment (VC-55 Board)

Subject	Not needed
Measurement Point	Pin (B4) (V SUB) of check point array
Measuring Instrument	Digital voltmeter
Adjustment Address	30 (V SUB 1) 31 (V SUB 2)
Specified Value	(Voltage indicated by the imager) ± 0.1 Vdc

Note: Adjustment address 31 (V SUB 1) is used for rough adjustment and that of 31 (V SUB 2) for fine adjustment.

Adjusting method:

1) Change the adjustment data the adjustment addresses 30 and 31 using the adjustment remote controller to set the VSUB voltage (voltage indicated by the imager) to ± 0.1 Vdc.
2) Change the adjustment address to store the adjustment data in the memory.

Note: The VSUB specified voltage is expressed by two digits with the integer section abbreviation and decimal section by the imager.

Integer section abbreviation	Integer value
1	1
⋮	⋮
9	9
A	10
B	11
C	12
D	13
E	14
F	15
G	16
H	17
I	18
J	19
K	20
L	21

CD-13 board (conductor side)

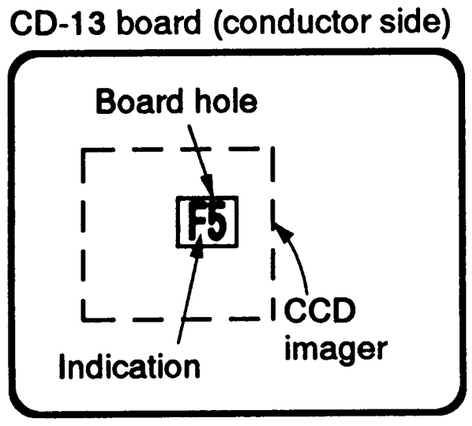

(Example)
If F5 is indicated, the integer value is F → 15 and decimal value is 5 → 0.5. Thus, the VSUB voltage becomes 15+0.5=15.5 (Vdc).

Fig. 7-13.

7-2-5. Hall Adjustment (DM-23 Board)

Subject	All black (cover lens with black cap)
Measurement Point	CN455 on AF-47 board
Measuring Instrument	AF microprocessor data reading jig
Adjusting Element	RV551 on DM-23 board
Adjustment Address	27 (Hall Offset)
Specified Value	When iris closed: Minimum value of 01 to 04 When iris open: 3D or 3E

Adjusting method:

1) Set RV551 to the mechanical center.
2) Set the adjustment address to 37 with the adjustment remote controller, and set the adjustment data to 05. (Setting when iris closed)
3) Change the adjustment address to 27.
4) Change the adjustment data until the indication on the AF microprocessor data reading jig is the minimum value in the range of 01 to 04. (Hall offset adjustment)
5) Change the adjustment address to 37 and set the adjustment data to 07. (Setting when iris open)
6) Adjust RV551 until the indication on the AF microprocessor data reading jig is either 3D or 3E. (3D is indicated as 3d .)
7) Repeat steps 2) through 6) until the specified values are satisfied.
8) Set the adjustment address to 37 and set the adjustment data to 00. (Releases the iris adjustment mode)
9) Change the adjustment address to store the adjustment data in the memory.

7-2-6. Iris Adjustment (VC-55 Board)

Subject	Color bar chart standard picture frame
Filter	ND filter 0.4 and 0.1
Measurement Point	Pin (B11) (CCD OUT) of check point array
Adjusting Instrument	Oscilloscope
Adjustment Address	25 (Iris)
Specified Value	420 ± 10 mVp-p

Adjusting method:

1) Set the adjustment address to 25 with the adjustment remote controller.
2) Without attaching an ND filter, change the adjustment data with the adjustment remote controller to set the IRIS OUT signal level to 420 ± 10 mVp-p.
3) Attach the ND filter 0.5 (0.4 ± 0.1) to the front of the lens and confirm that there is a smooth change in the signal level.
4) Remove the ND filter and confirm that the signal level is 420 ± 30 mVp-p.
5) Repeat 2) through 4) if the specified value is not satisfied.
6) Change the adjustment address to store the adjustment data in the memory.

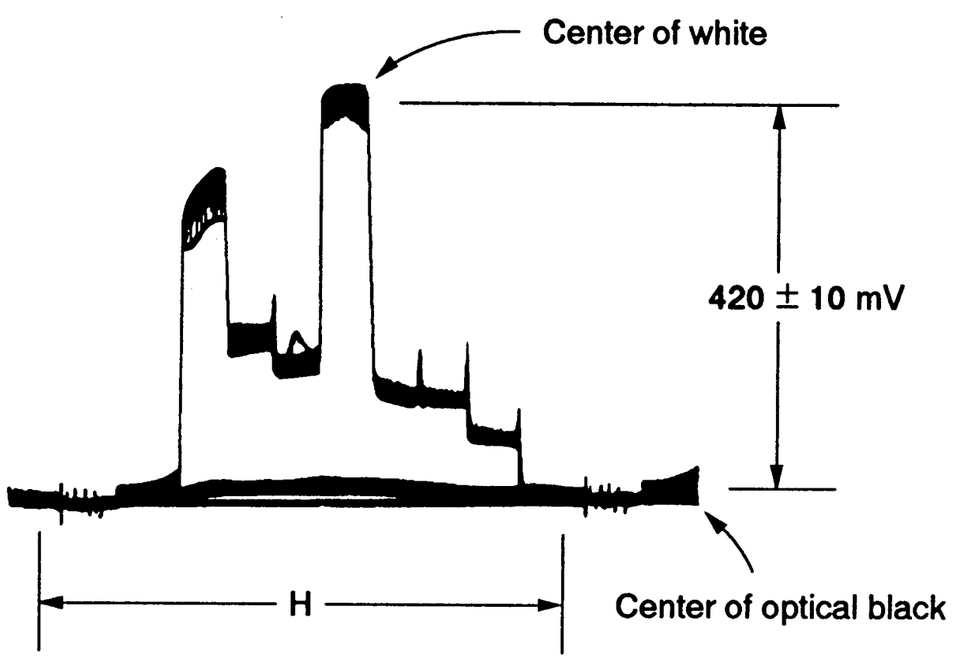

Fig. 7-14.

7-2-7. Iris In/Out Adjustment (AF-47 Board)

Subject	White pattern standard picture frame
Filter	ND filter 0.4 (two) and 0.1 (one)
Measurement Point	CN455
Measuring Instrument	AF microprocessor data reading jig
Adjustment Address	57 (Iris in) 58 (Iris out)

Adjusting method:

1) Cover the lens with the ND filter 0.8 (0.4+0.4).
2) Set the adjustment address to 37 with the adjustment remote controller and set the adjustment data to 09. (Hall in/out threshold mode setting)
3) Read the data indicated on the AF microprocessor data reading jig. This data will be a adjustment data and input it to the adjustment address 57.
4) Remove the ND filter 0.8 and replace it with ND filter 0.5 (0.4+0.1).
5) Read the data indicated on the AF microprocessor data reading jig. This data will be a adjustment data and input it to the adjustment address 58.
6) Change the adjustment address to 37 and set the adjustment data to 00. (Releases hall in/out threshold mode)
7) Change the adjustment address to store the adjustment data in the memory.

7-2-8. AGC Adjustment (VC-55 Board)

Subject	Color bar chart standard picture frame
Measurement Point	Pin (B3) (Y (LPF) OUT) of check point array
Measuring Instrument	Oscilloscope
Adjustment Address	32 (AGC)
Specified Value	160 ± 5 mVp-p

Adjusting method:

1) Set the adjustment address to 32 with the adjustment remote controller.
2) Change the adjustment data with the adjustment remote controller to set the Y (LPF) signal level to 160 ± 5 mVp-p.
3) Change the adjustment address to store the adjustment data in the memory.

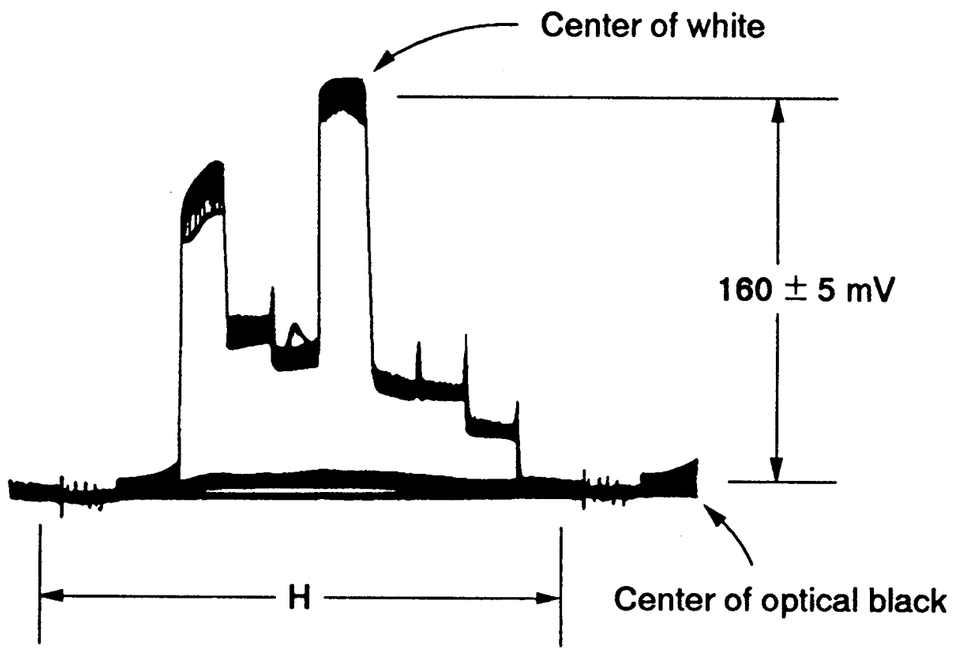

Fig. 7-15.

7-2-9. Y Signal Matrix Adjustment (VC-55 Board)

Subject	Color bar chart standard picture frame
Measurement Point	1: Pin (A4) (Y0) of check point array 2: Pin (A5) (Y1) of check point array
Measuring Instrument	Oscilloscope
Adjustment Address	14 (Y1 GAIN)
Specified Value	Y1 signal level=Y0 signal level

Adjusting method:

1) Connect the oscilloscope to Pin (A4) of the check point array and measure the Y0 signal level.
2) Connect the oscilloscope to Pin (A5) of the check point array. (Y1 signal level measurement)
3) Set the adjustment address to 14 using the adjustment remote controller.
4) Change the adjustment data until the Y1 signal level is the same as the Y0 signal level measured in 1).
5) Change the adjustment address to store the adjustment data in the memory.

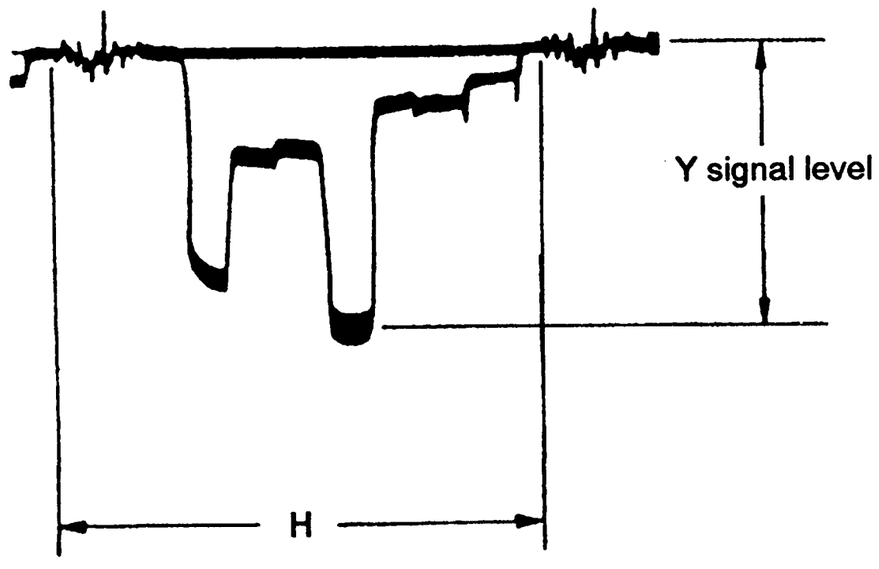

Fig. 7-16.

7-2-10. Chroma Signal Matrix Adjustment (1) (VC-55 Board)

Subject	Color bar chart standard picture frame
Measurement Point	1: Pin (A6) (C0) of check point array 2: Pin (A7) (C1) of check point array
Measuring Instrument	Oscilloscope
Adjustment Address	13 (C1 GAIN)
Specified Value	C1 signal level=C0 signal level

Adjusting method:

1) Connect the oscilloscope to Pin (A6) of the check point array and measure the C0 signal level. (The C0 signal level is the larger of the CR and CB signal levels.)
2) Connect the oscilloscope to Pin (A7) of the check point array.
3) Set the adjustment address to 13 using the adjustment remote controller.
4) Change the adjustment data until the C1 signal level is the same as the C0 signal level measured in 1).
5) Change the adjustment address to store the adjustment data in the memory.

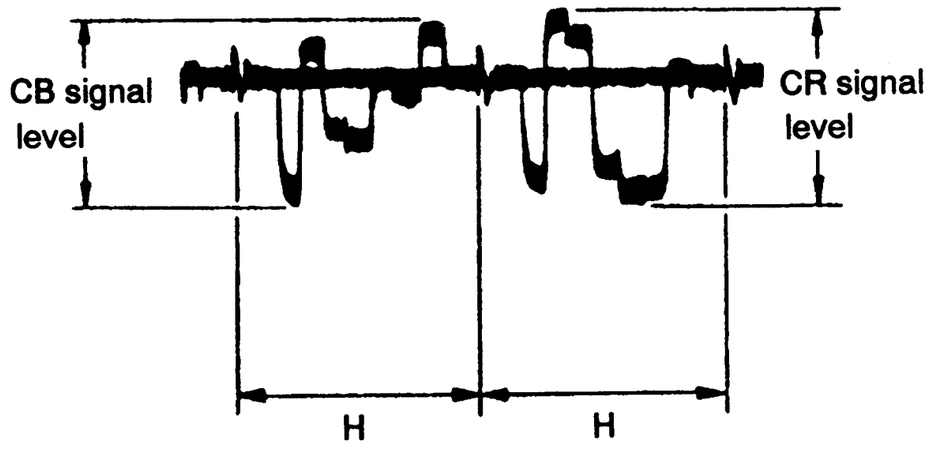

Fig. 7-17.

7-2-11. Chroma Signal Matrix Adjustment (2) (VC-55 Board)

Subject	Color bar chart standard picture frame
Measurement Point	CH1 (X): Pin ㉔ of CP-20 board (B–Y) CH2 (Y): Pin ㉕ of CP-20 board (R–Y)
Measuring Instrument	Oscilloscope (X-Y mode)
Adjustment Address	24 (C2 GAIN)
Specified Value	Separate color luminance points become one. (When using a vectorscope, follow as below.)

Note: Adjustment can be made in the same manner using a vectorscope.
(Vectorscope connection terminal: VIDEO OUT terminal of the video block)

Adjusting method:

1) Set the adjustment address to 24 using the adjustment remote controller.
2) Change the adjustment data so that the two separate color luminance points become one respectively.
3) Change the adjustment address to store the adjustment data in the memory.

Specification when using vectorscope:

specified value

Cyan, green	within 2.0 mm
Magenta	within 1.0 mm
Others	within 0.5 mm

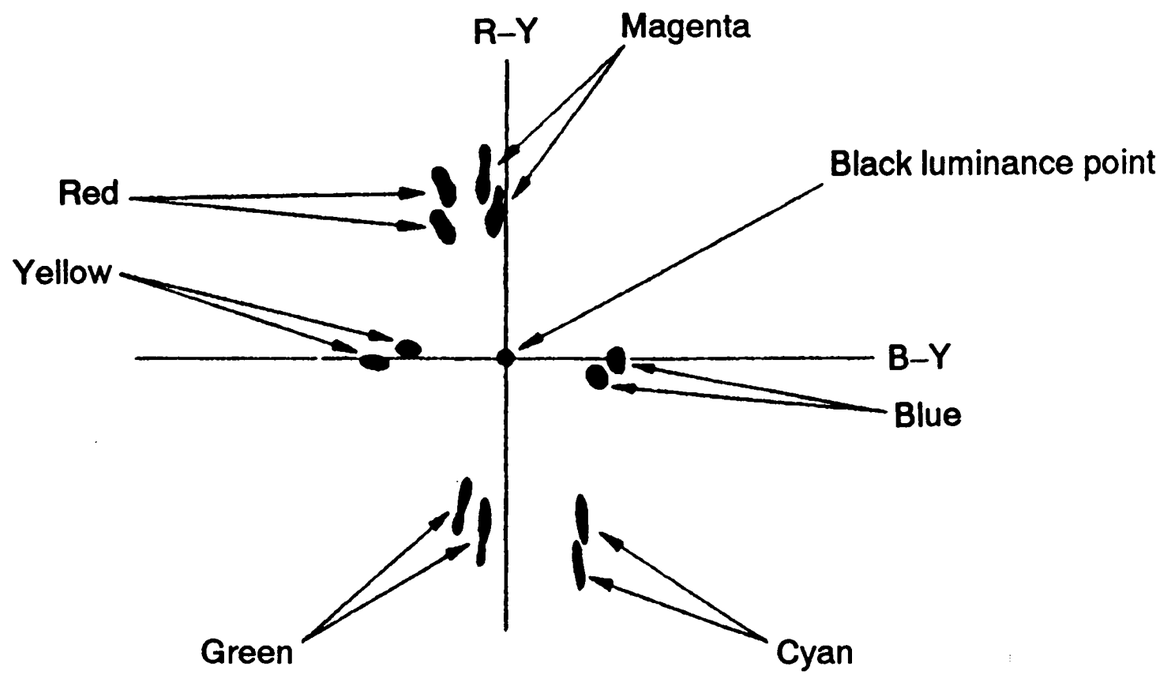

Fig. 7-18.

7-2-12. YH Level Adjustment (VC-55 Board)

Subject	Color bar chart standard picture frame
Measurement Point	Pin (A9) (YH) of check point array
Measuring Instrument	Oscilloscope
Adjustment Address	23 (Y GAIN)
Specified Value	900 ± 20 mV

Adjusting method:

1) Set the adjustment address to 23 with the adjustment remote controller.
2) Change the adjustment data with the adjustment remote controller to set the YH signal level to 900 ± 20 mV.
3) Change the adjustment address to store the adjustment data in the memory.

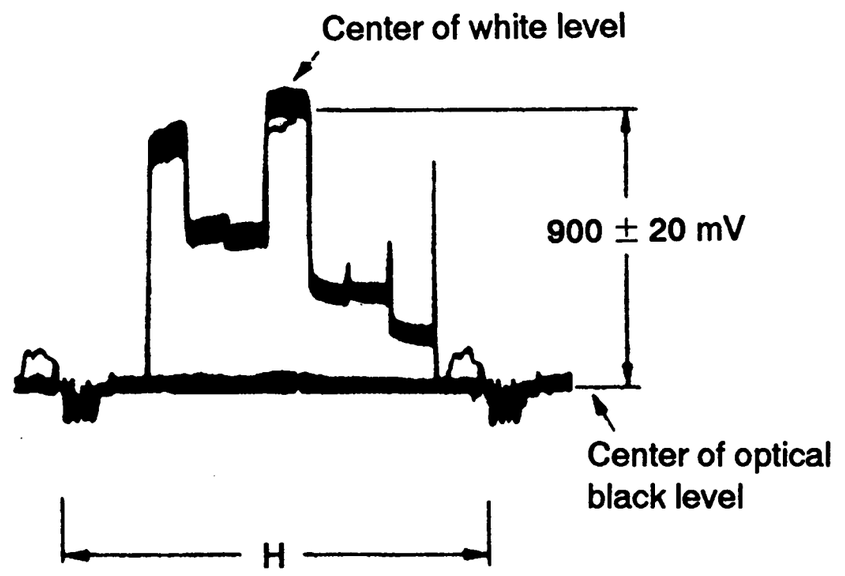

Fig. 7-19.

7-2-13. Chroma Level Adjustment (VC-55 Board)

Subject	Color bar chart standard picture frame
Measurement Point	Pin (A1) (G OUT) of check point array
Measuring Instrument	Oscilloscope
Adjustment Address	15 (C LEVEL)
Specified Value	320 ± 10 mV

Connection:

1) Connect Pin (B7) (MODE) of the check point array and GND with a jumper wire.

Adjusting method:

1) Set the adjustment address to 15 with the adjustment remote controller.
2) Change the adjustment data with the adjustment remote controller to set the G OUT signal level to 320 ± 10 mV.
3) Change the adjustment address to store the adjustment data in the memory.

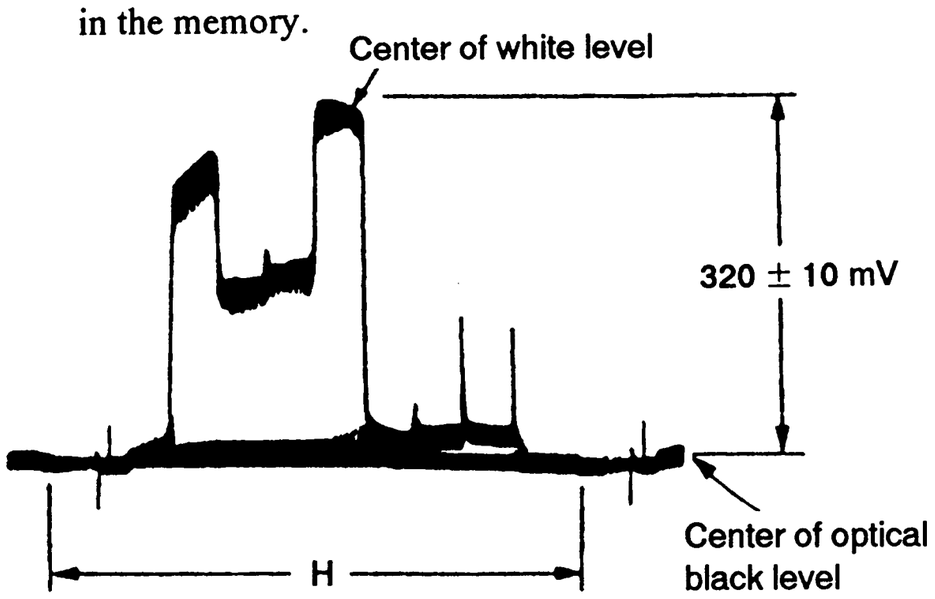

Fig. 7-20.

7-2-14. Sync Level Adjustment (VC-55 Board)

Subject	All black (cover lens with black cap)
Measurement Point	Pin ③ (Y OUT) of CN301
Measuring Instrument	Oscilloscope
Adjustment Address	18 (SYNC LEVEL)
Specified Value	285 ± 5 mVp-p

Adjusting method:

1) Set the adjustment address to 18 with the adjustment remote controller.
2) Change the adjustment data with the adjustment remote controller to set the sync level to 285 ± 5 mVp-p.
3) Change the adjustment address to store the adjustment data in the memory.

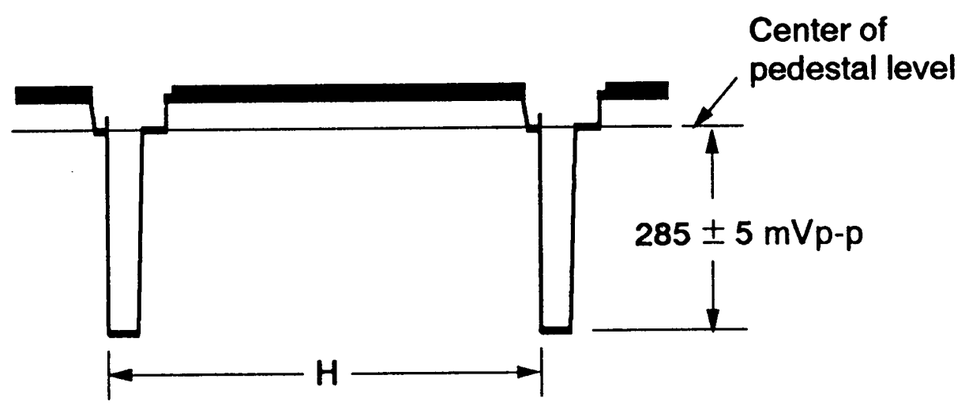

Fig. 7-21.

7-2-15. Setup Adjustment (VC-55 Board)

Subject	All black (cover lens with black cap)
Measurement Point	Pin ③ (Y OUT) of CN301
Measuring Instrument	Oscilloscope
Adjustment Address	19 (SET UP)
Specified Value	30 ± 10 mV

Adjusting method:

1) Set the adjustment address to 22 (APERTURE) with the adjustment remote controller, making a note of the adjustment data at this address. Then set the adjustment data to 00. (This is for noise reduction.)
2) Set the adjustment address to 19 with the adjustment remote controller.
3) Change the adjustment data with the adjustment remote controller to set the setup level to 30 ± 10 mV.
4) Set the adjustment address to 22 and reset the adjustment data to the value recorded in 1).
5) Change the adjustment address to store the adjustment data in the memory.

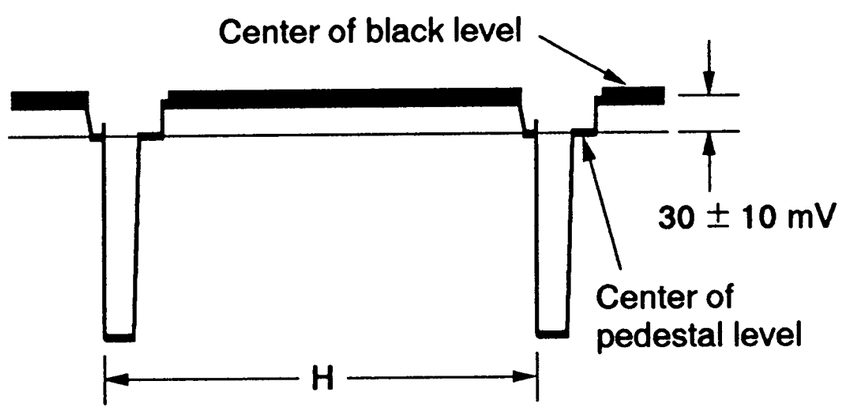

Fig. 7-22.

7-2-16. White Clip Adjustment (VC-55 Board)

Subject	High luminance pattern
Measurement Point	Pin ③ (Y OUT) of CN301
Measuring Instrument	Oscilloscope
Adjustment Address	20 (WHITE CLIP)
Specified Value	840 ± 20 mV

Adjusting method:

1) Set the adjustment address to 21 (Y LEVEL) with the adjustment remote controller and the adjustment data to 70.
2) Set the adjustment address to 20 with the adjustment remote controller.
3) Change the adjustment data with the adjustment remote controller to set the white clip level to 840 ± 20 mV.
4) Change the adjustment address to store the adjustment data in the memory.
5) Perform "Y Level Adjustment".

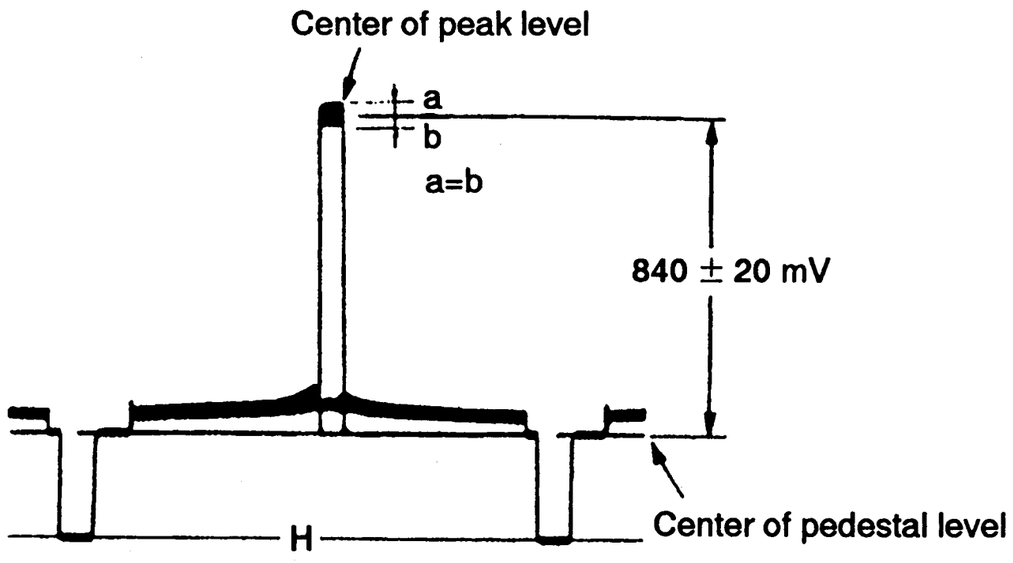

Fig. 7-23.

7-2-17. Y Level Adjustment (VC-55 Board)

Subject	Color bar chart standard picture frame
Measurement Point	Pin ③ (Y OUT) of CN301
Measuring Instrument	Oscilloscope
Adjustment Address	21 (Y LEVEL)
Specified Value	660 ± 10 mV

Adjusting method:

1) Confirm that "White Clip Adjustment" match with the specified value.
2) Set the adjustment address to 21 with the adjustment remote controller.
3) Change the adjustment data with the adjustment remote controller to set the Y signal level to 660 ± 10 mV.
4) Change the adjustment address to store the adjustment data in the memory.

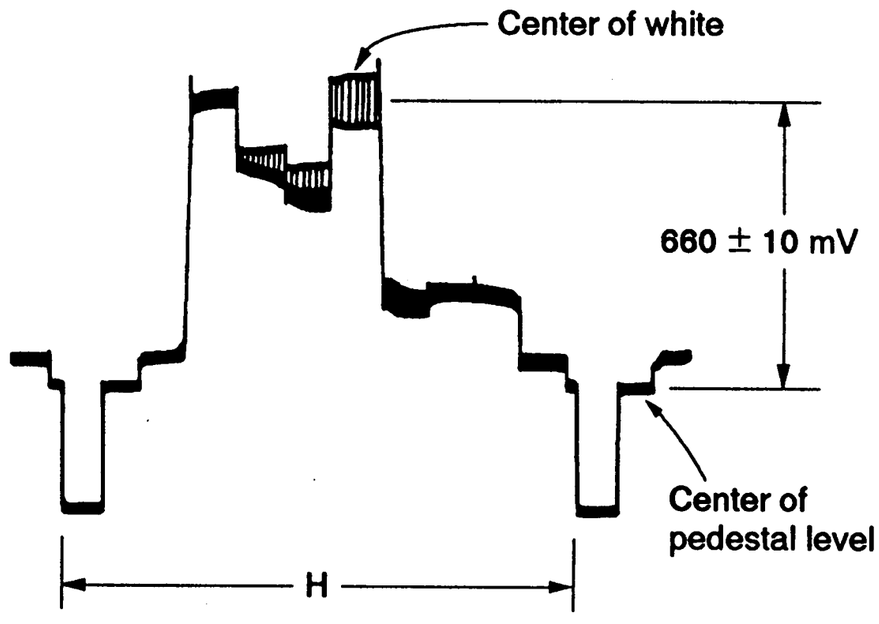

Fig. 7-24.

7-2-18. Aperture Adjustment (VC-55 Board)

Subject	Color bar chart standard picture frame
Measurement Point	Pin ③ (Y OUT) of CN301
Measuring Instrument	Oscilloscope
Adjustment Address	22 (APERTURE)
Specified Value	240 ± 10 mV

Adjusting method:

1) Turn the focus ring to set the aperture level (waveform peak) to maximum.
2) Set the adjustment address to 22 with the adjustment remote controller.
3) Change the adjustment data with the adjustment remote controller to set the aperture level (lower peak between green and white) to 240 ± 10 mV above the pedestal level.
4) Change the adjustment address to store the adjustment data in the memory.

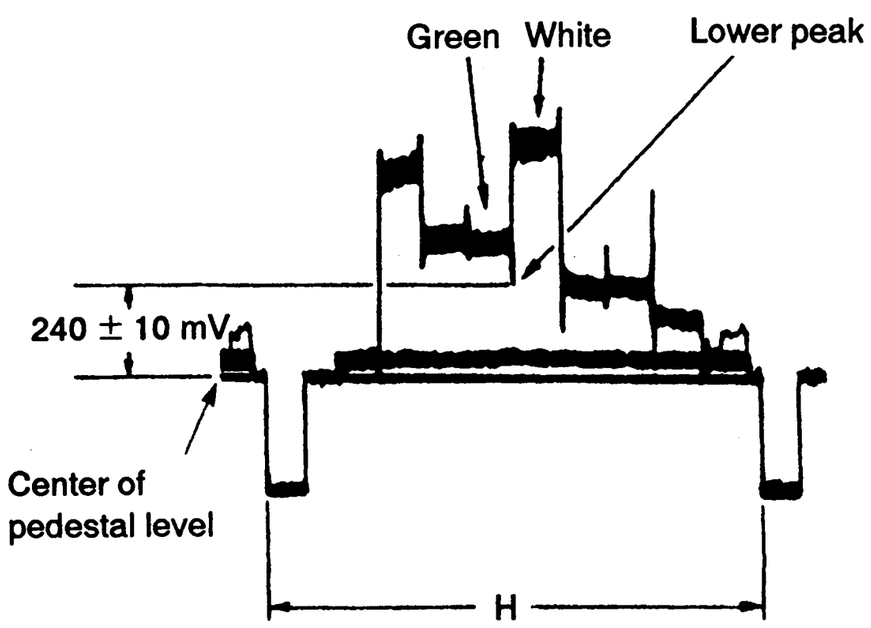

Fig. 7-25.

7-2-19. Max. Gain Adjustment (VC-55 Board)

Subject	Color bar chart standard picture frame
Filter	ND filters 1.0 (two) and 0.9 (one)
Measurement Point	Pin ③ (Y OUT) of CN301
Measuring Instrument	Oscilloscope
Adjustment Address	28 (MAX GAIN)
Specified Value	340 ± 10 mV

Adjusting method:

1) Cover the lens with the ND filter 2.9 (1.0+1.0+0.9).
2) Set the adjustment address to 28 with the adjustment remote controller.
3) Change the adjustment data with the adjustment remote controller to set the Y signal level to 340 ± 10 mV.
4) Change the adjustment address to store the adjustment data in the memory.

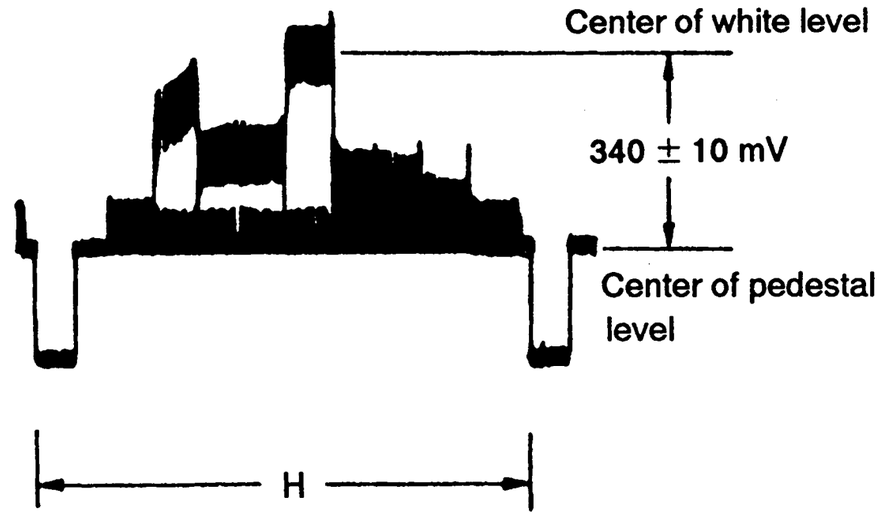

Fig. 7-26.

7-2-20. Burst Level Adjustment (VC-55 Board)

Subject	All black (cover lens with black cap)
Measurement Point	Pin ① (C OUT) of CN301
Measuring Instrument	Oscilloscope
Adjustment Address	16 (BURST LEVEL)
Specified Value	285 ± 5 mVp-p

Adjusting method:

1) Set the adjustment address to 16 with the adjustment remote controller.
2) Change the adjustment data with the adjustment remote controller to set the burst level to 285 ± 5 mVp-p.
3) Change the adjustment address to store the adjustment data in the memory.

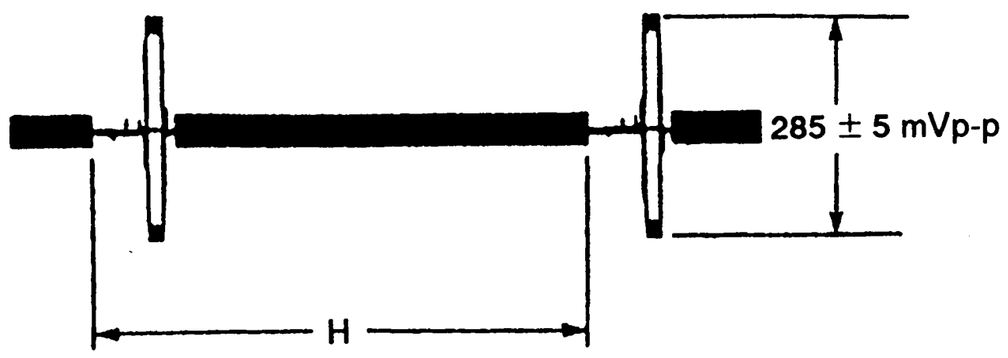

Fig. 7-27.

7-2-21. Pre-white Balance Adjustment (Method Using Vectorscope)

Subject	All white pattern
Measurement Point	VIDEO OUT terminal of the video block
Measuring Instrument	Vectorscope
Adjustment Address	11 (R GAIN) 12 (B GAIN)
Specified Value	The center of the white luminance point is within a circle with a diameter of 1 mm centered around the origin.

Adjusting method:

1) Set the adjustment address to 11 with the adjustment remote controller.
2) Change the adjustment data with the adjustment remote controller to place the white luminance point on the origin point.
3) Set the adjustment address to 12.
4) Change the adjustment data to place the white luminance point on the origin point.
5) Repeat steps 1) through 4).
6) Change the adjustment address to store the adjustment data in the memory.

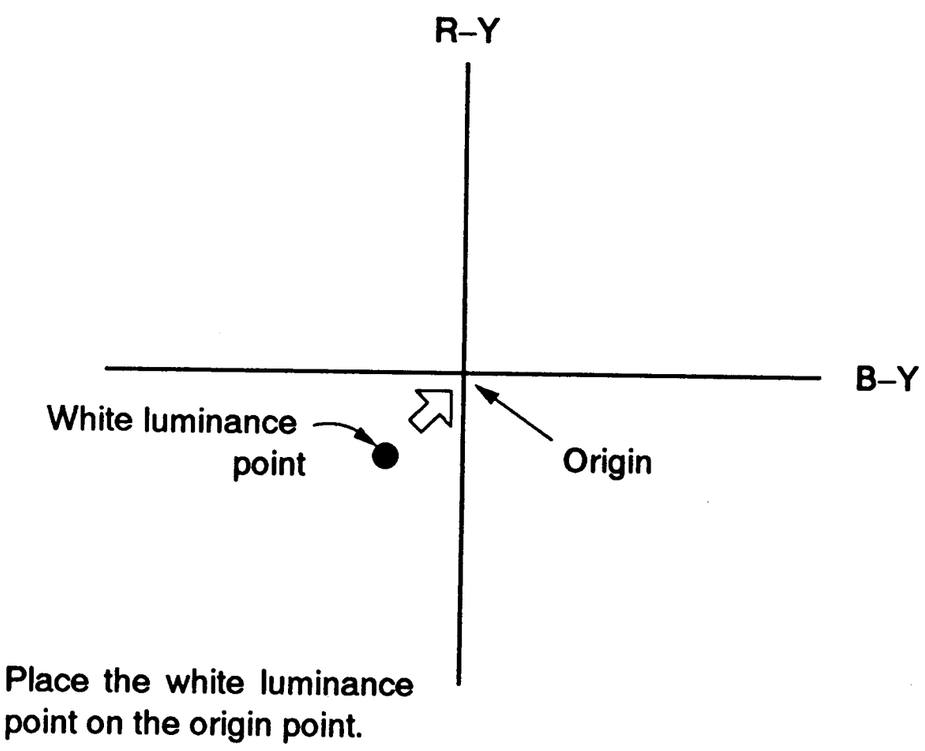

Fig. 7-28.

7-2-22. Pre-white Balance Adjustment (Method Using Oscilloscope) (VC-55 Board)

Subject	All white pattern
Measurement Point	Pin ① (C OUT) of CN301
Measuring Instrument	Oscilloscope
Adjustment Address	11 (R GAIN) 12 (B GAIN)
Specified Value	Minimum chroma signal amplitude

Adjusting method:

1) Set the adjustment address to 11 with the adjustment remote controller.
2) Change the adjustment data with the adjustment remote controller to minimize the chroma signal amplitude.
3) Set the adjustment address to 12.
4) Change the adjustment data to minimize the chroma signal amplitude.
5) Repeat steps 1) through 4).
6) Change the adjustment address to store the adjustment data in the memory.

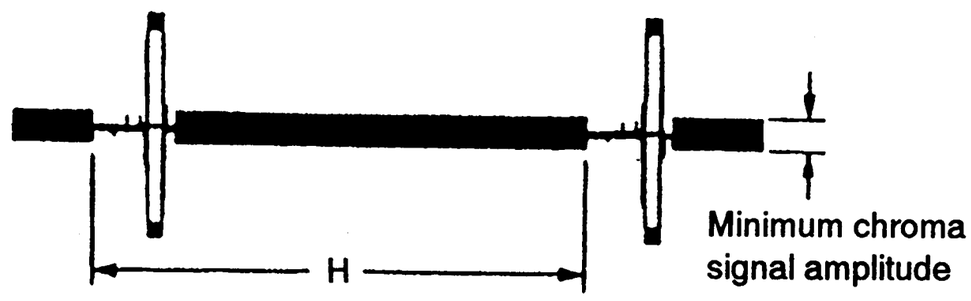

Fig. 7-29.

7-2-23. Color Reproduction Adjustment (Method Using Vectorscope)

Subject	Color bar chart standard picture frame
Measurement Point	VIDEO OUT terminals of the video block
Measuring Instrument	Vectorscope
Adjustment Address	05 (R–Y GAIN) 06 (B–Y GAIN) 07 (B–Y HUE) 08 (R–Y HUE)
Specified Value	All color luminance points are within color reproduction frame.

Note: Confirm that "Burst Level Adjustment" and "Pre-white Balance Adjustment" have been completed.

Adjusting method:

1) Adjust PHASE and GAIN of the vectorscope to set the burst luminance points to the designated position on the color reproduction frame.
2) Change the adjustment data at the various adjustment addresses using the adjustment remote controller until all color luminance points are within the color reproduction frame.
3) Change the adjustment address to store the adjustment data in the memory.

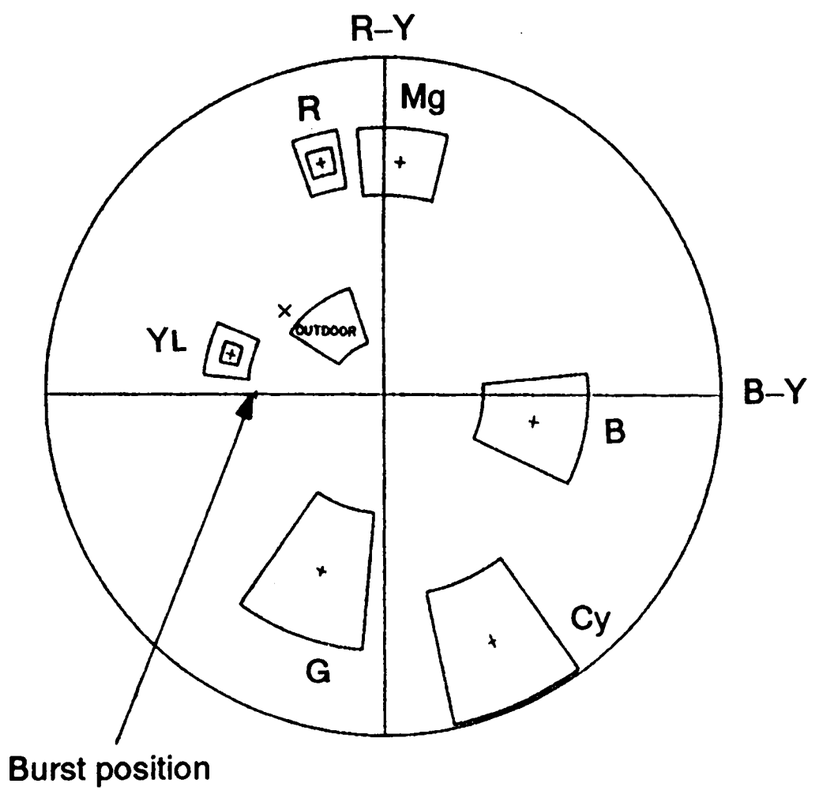

Fig. 7-30.

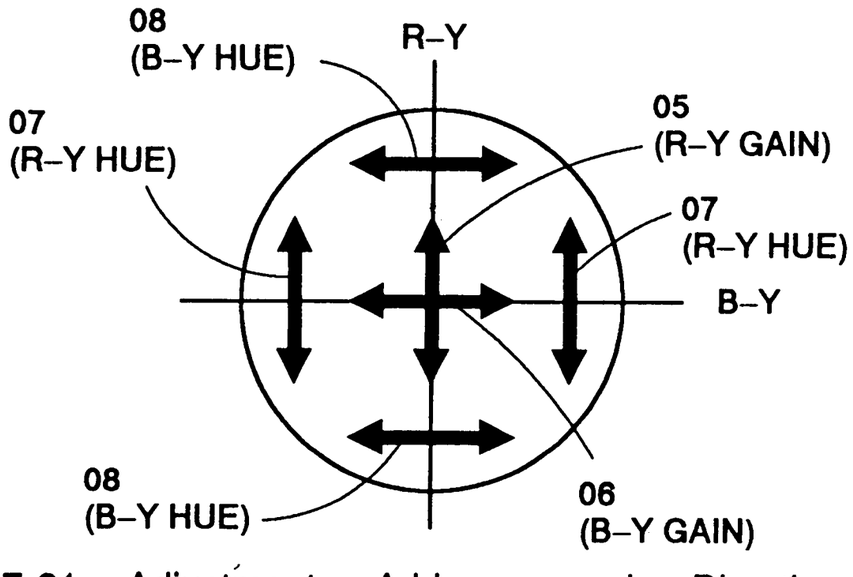

Fig. 7-31. Adjustment Address and Direction of Luminance Point Movement Direction

7-2-24. Color Reproduction Adjustment (Method using oscilloscope)

1. Gain Adjustment (VC-55 Board)

Subject	Color bar chart standard picture frame
Measurement Point	Pin ① (C OUT) of CN301
Measuring Instrument	Oscilloscope External trigger: Pin ③ (Y OUT) of CN301
Adjustment Address	05 (R–Y GAIN) 06 (B–Y GAIN)
Specified Value	Red level: 532 ± 30mVp-p Yellow level: 353 ± 23 mVp-p

Note: Confirm that "Pre-white Balance Adjustment" has been completed.

Adjusting method:

1) Set the adjustment address to 06 with the adjustment remote controller and set the adjustment data to E0.
2) Set the adjustment address to 07 and set the adjustment data to B0.
3) Set the adjustment address to 08 and set the adjustment data to B0.
4) Set the adjustment address to 05 and change the adjustment data to set the chroma signal red level to 532 ± 30 mVp-p.
5) Set the adjustment address to 06 and change the adjustment data to set the chroma signal yellow level to 353 ± 23 mVp-p.
6) Repeat steps 4) and 5) until the both levels meet the specified values.
7) Change the adjustment address to store the adjustment data in the memory.
8) Perform "Hue Adjustment".

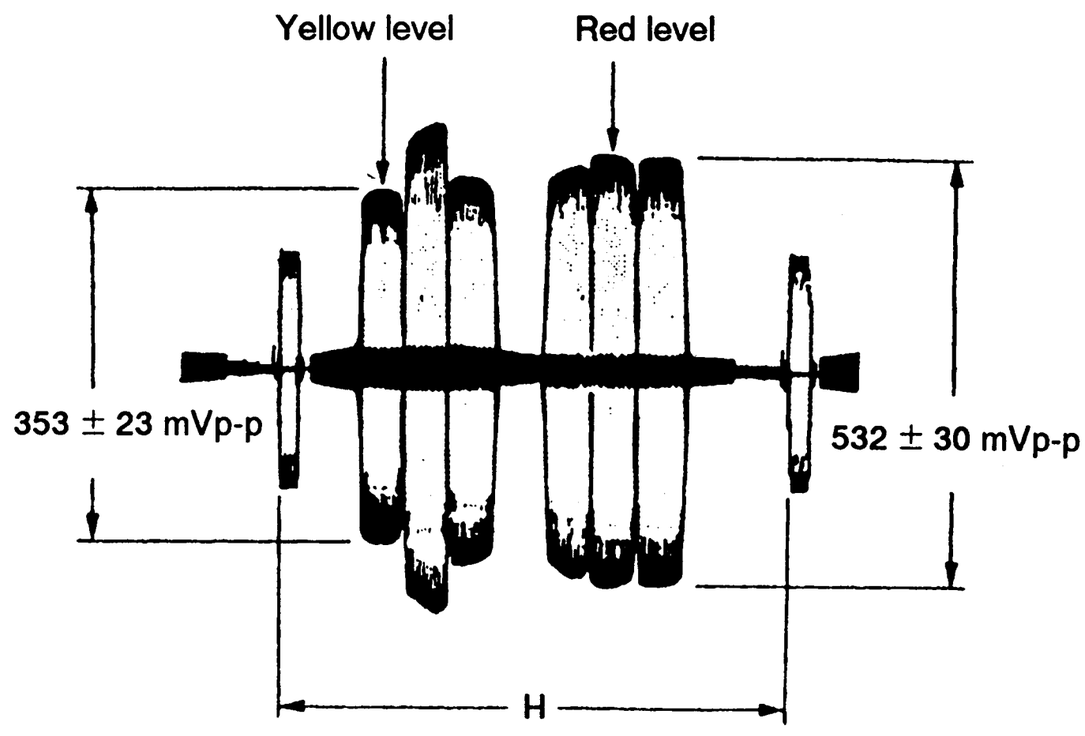

Fig. 7-32.

2. Hue adjustment

Subject	Color bar chart standard picture frame
Measurement Point	CH1 (X): Pin ㉔ of CP-20 board (B–Y) CH2 (Y): Pin ㉕ of CP-20 board (R–Y)
Measuring Instrument	Oscilloscope (X-Y mode)
Adjustment Address	07 (R–Y HUE) 08 (B–Y HUE)
Specified Value	Various color luminance points within color reproduction frame.

Note: Confirm that "Pre-white Balance Adjustment" has been completed.

Adjusting method:

1) Line up the black luminance point on the oscilloscope with the origin point of the color reproduction frame.
2) Change the adjustment data at adjustment addresses 07 and 08 with the adjustment remote controller to bring the various color luminance points into the color reproduction frame.
3) Check the hue reproduced on the monitor TV and fine adjust the adjustment data at adjustment addresses 07 and 08 if necessary.
4) Change the adjustment address to store the adjustment data in the memory.

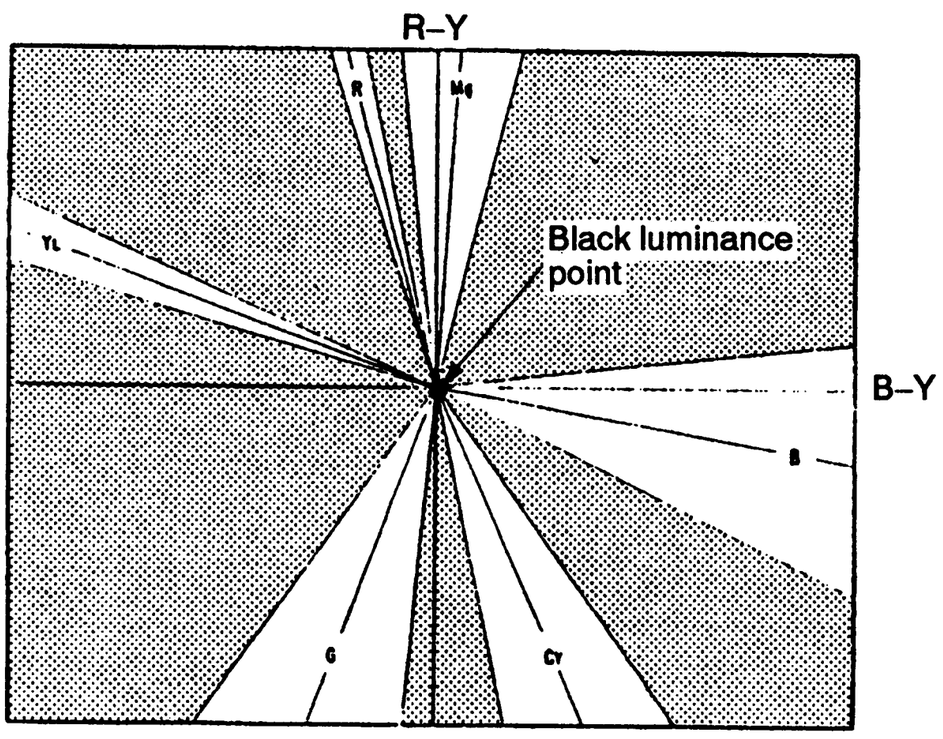

Fig. 7-33.

7-2-25. Auto White Balance Adjustments

Note: Be sure to first perform "Preset Adjustment", "Auto White Balance Adjustment" in this order.

1. Preset adjustment (VC-55 board)

Subject	White pattern standard picture frame

Note: 1) Perform preset adjustment after supplying power to the unit for at least 30 seconds.
2) When performing preset adjustment again, repeat after first turning the power off and then back on.

Preparations

1) Prepare for connecting Pin (B5) (AWB ADJ) of the check point array and Pin ⑧ (SS 5V) of W302 with a jumper wire.

Adjusting method:

1) Turn the power OFF and then ON.
2) Confirm that EVR ADJ mode is set to normal. (Pin (B6) (CAM ADJ) is open.)
3) Connect Pin (B6) (CAM ADJ) of the check point array to GND with a jumper wire.
4) Select the adjustment address 89 (AWB MODE) using the adjustment remote controller and set the adjustment data to E0. Wait at least for five seconds.
5) Change the adjustment address to store the adjustment data in the memory. Wait at least for five seconds.
6) Remove the jumper wire from Pin (B6) (CAM ADJ) of the check point array.
7) Connect Pin (B5) (AWB ADJ) of the check point array and Pin ⑧ of W302 (SS 5V) with a jumper wire.
8) Connect Pin (B6) (CAM ADJ) of the check point array to GND with a jumper wire. (Confirm that the adjustment remote controller displayed data (address 01) changes at this time.)
9) Remove the jumper wire connected to Pin (B6) (CAM ADJ) of the check point array after allowing one second or more to elapse.
10) Remove the jumper wire connected to Pin (B5) (AWB ADJ) of the check point array.
11) Perform "Auto White Balance Adjustment".

2. Auto white balance adjustment (VC-55 board)

Note: Be sure to perform this adjustment after completing "Preset Adjustment".

Subject	White pattern
Filter	Filter C14 for color temperature correction
Measuring Instrument	Oscilloscope (X-Y Mode)[Note 1]
Measurement Point	CH1 (X): Pin ㉔ of CP-20 board (B–Y) CH2 (Y): Pin ㉕ of CP-20 board (R–Y)
Adjustment Address	01 (DELTA R) 02 (DELTA B) 76 (R DWN LMT) 78 (R OUT LMT) 77 (B UP LMT) 79 (B OUT LMT) 80 (R OUT DOOR) 81 (B OUT DOOR)
Specified Value	Line up the white luminance point with the black luminance point.

Note: 1) Adjustment can be made in the same manner using a vectorscope.
Make connection to the video output terminals of the video block when the vectorscope is used.
2) All calculations in this section are made in decimal.

Adjusting method:

1) Select the adjustment address 89 (AWB MODE) with the adjustment remote controller and enter adjustment data of 10.
2) Cover the lens with the C14 filter.
3) Change the adjustment data at the adjustment addresses 01 and 02 with the adjustment remote controller to line up the white luminance point and black luminance point.
(Line up the white luminance point with the origin point when using the vectorscope.)
The adjustment data of adjustment address 01 will be C_1 and the adjustment data of adjustment address 02 will be C_2.
4) Convert the adjustment data C_1 to decimal to obtain C_1', and the adjustment data C_2 to decimal to obtain C_2'.
(See Table 7-5. Hexadecimal-Decimal Conversion Table)

• Limiter adjustment

5) Obtain D_{76}' by the following formula.
$D_{76}' = C_1' - 10$
6) Convert D_{76}' to hexadecimal and call this value D_{76}.
(Omit the decimals.)
7) Select the adjustment address 76 and enter the adjustment data D_{76}.
Select the adjustment address 78 and enter the adjustment data C_1.
8) Obtain D_{77}' by the following formula.
$D_{77}' = C_2' \times 1.8 - 38.4$
$D_{79}' = C_2' + 6$
9) Convert D_{77}' and D_{79}' to hexadecimal and call these respective values D_{77} and D_{79}.
10) Select the adjustment address 77 and 79 with the adjustment remote controller, and enter the adjustment data D_{77} and D_{79} into respective addresses.

• Outdoor preset adjustment

11) Obtain D_{80}' and D_{81}' by the following formula.
$D_{80}' = C_1' + 1$
$D_{81}' = C_2' + 3$
12) Convert D_{80}' and D_{81}' to hexadecimal and call these values D_{80} and D_{81}. (Omit the decimals.)
13) Select the adjustment address 80 and 81, and enter the adjustment data D_{80} and D_{81} into the respective address.
14) Select the adjustment address 89, and enter the adjustment data F0.
15) Change the adjustment data at the adjustment addresses 01 and 02 with the adjustment remote controller to line up the white luminance point and black luminance point.
(Line up the white luminance point with the origin point when using the vectorscope.)
16) Select the adjustment address 89, and enter the adjustment data 00.
17) Change the adjustment address to store the adjustment data in the memory.

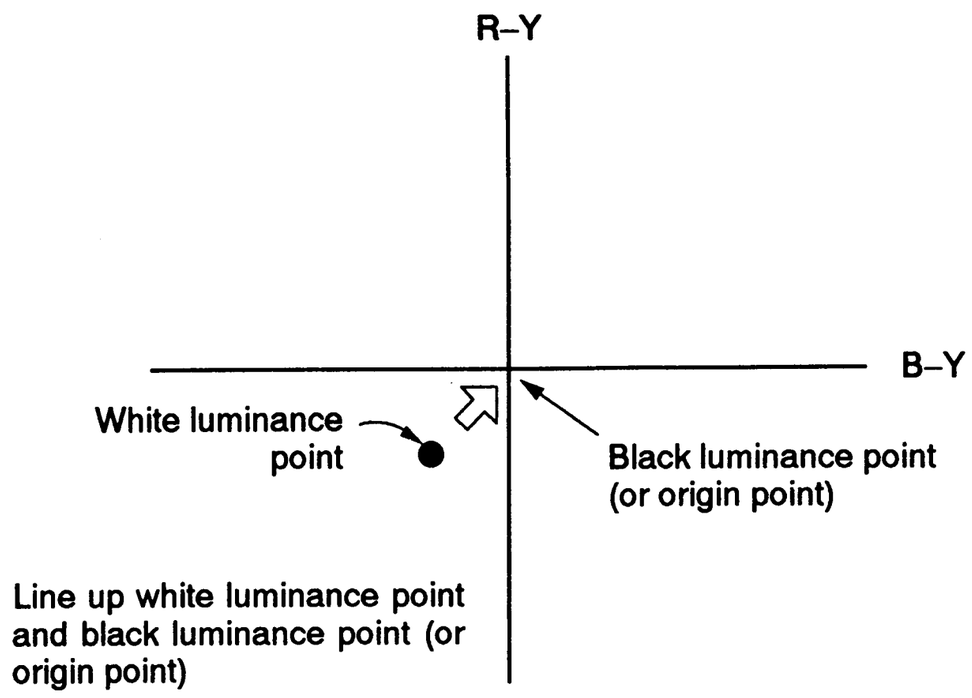
R–Y
B–Y
White luminance point
Black luminance point (or origin point)
Line up white luminance point and black luminance point (or origin point)

Fig. 7-34.

7-2-26. Outdoor White Balance Confirmation (VC-55 Board)

Subject	White pattern standard picture frame
Measurement Point	When vectorscope used: VIDEO OUT terminals of the video block When oscilloscope (X-Y mode) used: CH1 (X): Pin ㉔ of CP-20 board (B–Y) CH2 (Y): Pin ㉕ of CP-20 board (R–Y)
Measuring Instrument	
Specified Value	White luminance point should be within OUT DOOR specified frame.

Connection:

1) Remove the jumper wire connected to Pin (B6) (CAM ADJ) of the check point array. (Turn off the EVR adjustment mode.)

Checking method:

1) Using the white balance switch, select the outdoor white balance mode (☀). (☀ mark is displayed on EVF screen or monitor TV screen (when data screen ON).)
2) Confirm that the center of the white luminance point is within OUT DOOR frame of the color reproduction frame.
   Note: When using a vectorscope, adjust GAIN and PHASE of the vectorscope so that burst luminance point lines up with the burst position of the color reproduction frame.
3) When using the oscilloscope, further connect it to Pin ① of CN302 on the VC-55 board, and confirm that the chroma signal level is 190 ± 65 mVp-p.

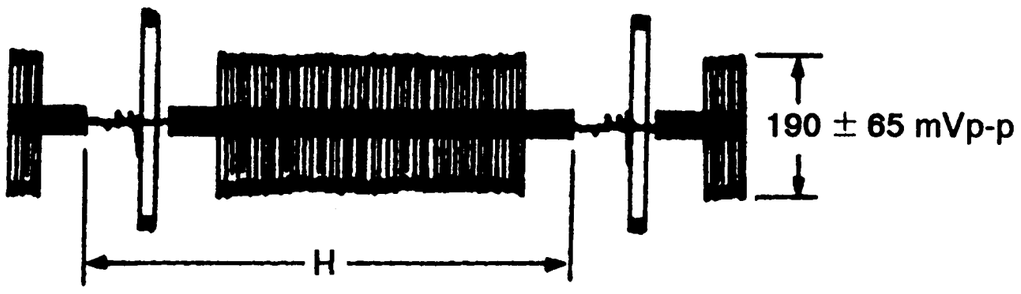

Fig. 7-35.

7-2-27. Focus Motor Speed Adjustment (VC-55 Board)

Subject	Arbitrary
Measurement Point	CN455
Measuring Instrument	AF microprocessor data reading jig
Adjustment Address	26 (FOCUS SPEED)
Specified Value	Average value of data indicated on jig=8.0 ± 0.5

Remarks: The rotation time from the close extreme to far extreme of the focus ring is approximately 2.5 seconds after completion of adjustment.

Adjusting method:

1) Turn on the auto focus with FOCUS switch (S206 on FD-13 board).
2) Select adjustment address 37 with the adjustment remote controller and enter adjustment data 01. (Setting when hunting mode)
3) Set the adjustment address to 26.
4) Change the adjustment data so that the indication on the AF microprocessor data reading jig is 08 while the focus ring is rotating.
5) Press the HOLD button of the AF microprocessor data reading jig while the focus ring is rotating to read the indication value.
6) Repeat step 5) ten times and obtain the average value.
   Specified value=8.0 ± 0.5
   Repeat steps 3) and 4) if the specified value is not satisfied.
7) Set the adjustment address to 37 and set the adjustment data to 00. (Releases hunting mode)
8) Change the adjustment address to store the adjustment data in the memory.

7-2-28. Macro Area Adjustment (AF-47 Board)

Subject	Arbitrary
Measurement Point	CN455
Measuring Instrument	AF microprocessor data reading jig
Adjustment Address	39 (MACRO)
Specified Value	Value at zoom ring WIDE position

Adjusting method:

1) Set the zoom ring to the WIDE position (11 mm position).
2) Select adjustment address 37 with the adjustment remote controller and set the adjustment data to 03. (Sets zoom position indication mode)
3) Read the data indicated on the AF microprocessor data reading jig. (Data in the range of 02 to 0F is displayed if normal.)
4) Change the adjustment address to 39.
5) Enter the data read from the jig as the adjustment data.
6) Change the adjustment address to 37 and set the adjustment data to 00. (Releases zoom position indication mode)
7) Change the adjustment address to store the adjustment data in the memory.

7-2-29. Auto-Focus LLA Adjustment (AF-47 Board)

Subject	Color bar chart standard picture frame
Filter	ND filters 1.0 (two) and 0.1 (one)
Measurement Point	CN455
Measuring Instrument	AF microprocessor data reading jig
Adjustment Address	38 (LLA)
Specified Value	(Value indicated on jig) –2

Adjusting method:

1) Cover the lens with the ND filter 2.2 (1.0+1.0+0.1+0.1).
2) Select adjustment address 37 with the adjustment remote controller and set to 0B as the adjustment data. (Sets auto-focus LLA adjustment mode)
3) Read the data indicated on the AF microprocessor data reading jig and call this value D.
4) Subtract 2 from D and make this value the LLA data. (See Table 7-5. Hexadecimal-Decimal Conversion Table.)

(Example)
When D=30 (48), LLA data is 2E (46)
When D=31 (49), LLA data is 2F (47)
( ).....is decimal equivalent

5) Select adjustment address 38 with the adjustment remote controller and enter the LLA data as the adjustment data.
6) Select adjustment address 37 and set 00 as the adjustment data. (Releases auto-focus LLA adjustment mode)
7) Change the adjustment address to store the adjustment data in the memory.

7-2-30. Auto Focus Adjustment

1. AF data input preparation (AF-47 board)

Subject	All black (cover lens with black cap) White pattern standard picture frame
Measurement Point	CN455
Measuring Instrument	AF microprocessor data reading jig
Adjustment Address	45(FH B) 44(FA B) 52(FH W) 54(AGC W) 55(AGC B)
Specified Value	FH B ≦ 1C FA B ≦ 1C FH W ≦ 0F FA W ≦ 0F

Adjusting method:

1) Turn off the auto focus with FOCUS switch (S206 on FD-13 board).
2) Cover the lens with the black cap.
3) Select the adjustment address 37 with the adjustment remote controller and set the adjustment data to FF. (The auto focus filter is fixed at FH side.)
4) Read the indication on the AF microprocessor data reading jig and enter this data (FH B) into the adjustment address 45. (FH B should be within 00 to 1C.)
5) Select adjustment address 37 and enter adjustment data into FD.
6) Read the indication on the AF microprocessor data reading jig and enter this data (FA B) into the adjustment address 44. (FA B should be within 00 to 1C.)
7) Select the adjustment address 37 and set the adjustment data to 0B.
8) Read the indication on the AF microprocessor data reading jig and enter this data (AGC B) into the adjustment address 55.
9) Remove the black cap of lens and shoot the white pattern (pattern box) with the standard picture frame. (Confirm that the white diffuser surface of the pattern box is clean.)
10) Select the adjustment address 37 and set the adjustment data to FF.
11) Read the indication on the AF microprocessor data reading jig and enter this data (FG W) into the adjustment address 52. (FG W should be within 00 to 0F.)
12) Select the adjustment address 37 and set the adjustment data to FD.
13) Read the indication on the AF microprocessor data reading jig and confirm this data (FA W). (FA W should be within 00 to 0F.)
14) Select the adjustment address 37 and set the adjustment data to 0B.
15) Read the indication on the AF microprocessor data reading jig and enter this data (AGC W) into the adjustment address 54.
16) Select the adjustment address 37 and set the adjustment data to 00.
17) Change the adjustment address to store the adjustment data in the memory.
18) Perform “Auto Focus Adjustment”.

2. Auto focus adjustment (AF-47 board)

Subject	Siemens star (position 1.5 m from the front of the lens reference plane (" ϕ " mark))
Measurement Point	CN455
Measuring Instrument	AF microprocessor data reading jig
Adjustment Address	41 (LOW CONT) 42 (FA SM) 43 (FH SM) 47 (GETA H) 49 (STEP)
Specified Value	$10 \leqq$ FH SM $\leqq 40$ $40 \leqq$ FA SM $\leqq 80$

Measuring method:

1) Place the Siemens star 1.5 m from the front of the lens reference surface (See Fig. 7-2.).
2) Set the zoom lever to its TELE-end position (88 mm) and turn off auto focus with FOCUS switch (S206 on FD-13 board).
3) Adjust the position of the camera block so that center of the Siemens star is lined up with the center of the monitor screen on the monitor TV screen.

Illumination adjustment

1) Select the adjustment address 37 with the adjustment remote controller, and enter the adjustment data 09. (This enables to indicate the iris condition on the AF microprocessor data reading jig (abbreviate to AF jig).)
2) Cover the black cap on the lens and read the indication on the AF jig. (This will be the value at opening the iris in full.)
3) Remove the black cap and confirm that the AF jig indicating value is less than reading value in step 2). (Light up the illumination to the Siemens star if the iris is fully opened.)
4) Reduce the illumination to the Siemens star gradually. (When using ND filter, increase the ND value gradually.) Fix the illumination at the point where the AF jig indication value at the full iris decreases by two. (At this time, the monitor screen should not become dark.)

Auto focus adjustment

1) Set the focus ring to the close extreme (1.3 m) and shoot the Siemens star with the standard picture frame.
2) Press FOCUS PUSH AUTO button (S207 on FD-13 board). After 2.5 seconds, confirm that a sharp image of Siemens star can be obtained and then release the hand.
3) Select the adjustment address 37 with the adjustment remote controller and enter the adjustment data FF. (Auto focus filter will be fixed at FH side.)
4) Read the indication of AF jig and convert this data D to decimal to obtain D′. Obtain FH SM′ by the following formula.
   FH SM′ =D′ /2.5
   Convert FH SM′ to hexadecimal and obtain FH SM.
   (Omit the decimals. FH SM should be within 10 to 40.)
5) Enter FH SM into the adjustment address 43.
6) Select the adjustment address 37 with the adjustment remote controller and enter the adjustment data FD. (Auto focus filter will be fixed at FA side.)
7) Read the indication of AF jig and convert this data D to decimal to obtain D′. Obtain FA SM′ by the following formula.
   FA SM′ =D′ /1.6
   Convert FA SM′ to hexadecimal and obtain FA SM.
   (Omit the decimals. FA SM should be within 40 to 80.)
8) Enter FA SM into the adjustment address 42.
9) Select the adjustment address 47 and enter the adjustment data below.
   GETA H=FH B+2
   (FH B is the data at the adjustment address 45.)
10) Select the adjustment address 41 and enter the adjustment data below.
    LOW CONT=FA B+3
    (FA B is the data at the adjustment address 44.)
11) Convert FA SM, FH SM and FH B (hexadecimal) to decimal and obtained values will be FA SM′, FH SM′ and FH B′, respectively.
    Obtain k′ by the following formula.

$$k' = \frac{\text{FA SM}' - 32}{\text{FH SM}' - \text{FH B}' - 4}$$

According to the value of k′, obtain a input data from the table below.

	$k' \leqq 4$	$4 < k' \leqq 8$	$8 < k'$
Input data	02	03	04

12) Select the adjustment address 49 and enter the data obtained above step 11).
13) Select the adjustment address 37 and set the adjustment data to 00.
14) Change the adjustment address to store the adjustment data in the memory.

7-2-31. Auto Focus Confirmation

Subject	Siemens star (position 1.5 m from the front of the lens reference plane (" ϕ " mark))

Note: Perform adjustment with the EVF (electronic viewfinder) attached.

Measuring method:

1) Place the Siemens star 1.5 m from the front of the lens reference surface (See Fig. 7-2.).
2) Set the zoom lever to its TELE-end position (88 mm).
3) Adjust the position of the camera block so that center of the Siemens star is lined up with the center of the monitor screen on the monitor TV screen.
4) To open the iris with IRIS knob (RV201 on FD-13 board). At this time, adjust the illumination to the Siemens star or cover the lens with ND filter to obtain a sharp image on the monitor TV screen.
5) Turn off the auto-focus with FOCUS switch (S206 on FD-13 board).
6) Rotate the focus ring to the close-end position (1.3 m).
7) Press PUSH AUTO button (S207 on FD-13 board).
8) Confirm that there is focusing within 2.5 seconds and a sharp image can be obtained.
9) Let go of PUSH AUTO button, and rotate the focus ring to the far-end position (∞).
10) Press PUSH AUTO button.
11) Confirm that there is focusing within 3.5 seconds and a sharp image can be obtained.

7-3. DIGITAL TITLER SYSTEM ADJUSTMENT

7-3-1. Titler PLL Adjustment (SS-95 Board)

Subject	Arbitrary
Measurement Point	Hot side terminal of C163 or Pin ⑬ of IC161.
Measuring Instrument	Digital voltmeter
Adjustment Element	CT161
Specified Value	2.45 ± 0.1 Vdc

Connections:

1) Connect Pin ⑭ of IC161 and Pin ⑦ (SS 5V) of CN211 with a jumper wire.

Adjusting method:

1) Adjust with CT161 to 2.45 ± 0.1 Vdc.

7-3-2. Title A/D Level Adjustment

Subject	Color bar chart standard picture frame
Measurement Point	Confirmed on monitor TV
Measuring Instrument	
Adjustment Address	09 (TITLE A/D)
Specified Value	Blue and black areas are superimposed (become white). All areas other than above does not change.

Note: Make sure that "Y Level Adjustment" has been completed.

Adjusting method:

1) Press TITLE 1 (S706 on CK-18 board) and display "T1 WHT" on the EVF or data screen.
2) Select the adjustment address 09 with the adjustment remote controller.
3) Press MEMORY button (S708 on CK-18 board).
4) Confirm that the blue and black areas are superimposed and become white and that the red and magenta areas does not change.
5) If this specification is not satisfied, change the adjustment data with the adjustment remote controller and repeat 3) and 4).
6) Change the adjustment address to store the adjustment data in the memory.

The shaded area should be changed to white.

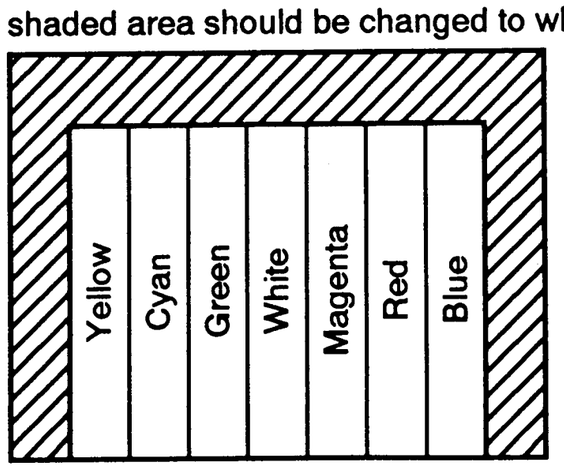

Fig. 7-36.

7-3-3. Title Pedestal Adjustment (VC-55 Board)

Subject	All black (cover lens with black cap)
Measurement Point	Pin ① (C OUT) of CN301
Measuring Instrument	Oscilloscope
Adjustment Address	03 (PED)
Specified Value	Minimum 3.58 MHz chroma component

Adjusting method:

1) Press TITLE 1 (S706 on CK-18 board).
2) Turn on the data screen with DATA SCREEN button (S741 on VK-2 board) and confirm that "T1 WHT" characters are displayed on the monitor screen. (If another color is displayed, press COLOR button (S709 on CK-18 board) until "T1 WHT" is displayed.)
3) Cover the lens with the black cap and press MEMORY button (S708 on CK-8 board).
4) Set the adjustment address to 03 with the adjustment remote controller.
5) Change the adjustment data with the adjustment remote controller to set the 3.58 MHz chroma component to minimum amplitude.
6) Change the adjustment address to store the adjustment data in the memory.

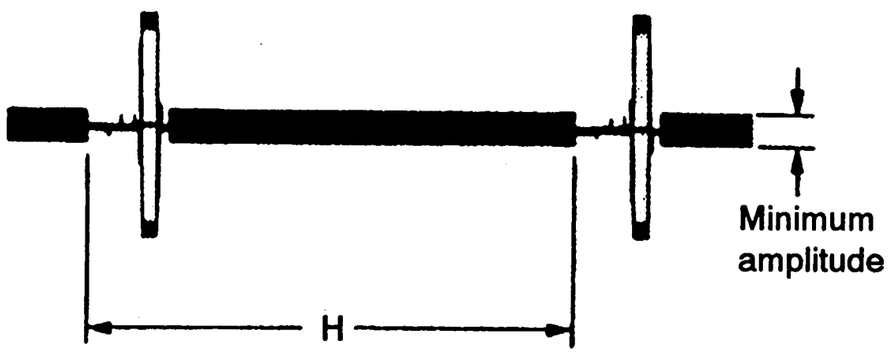

Fig. 7-37.

7-3-4. Title Y Level Adjustment (VC-55 Board)

Subject	All black (cover lens with black cap)
Measurement Point	Pin ③ (Y OUT) of CN301
Measuring Instrument	Oscilloscope
Adjustment Address	10 (CHARACTER)
Specified Value	500^{+80}_{-70}mV

Adjusting method:

1) Press TITLE 1 button (S706 on CK-18 board).
2) Turn on the data screen with DATA SCREEN button (S741 on VK-2 board) and confirm that "T1 WHT" characters are displayed on the monitor screen.
3) Cover the lens with the black cap and press MEMORY button (S708 on CK-8 board).
4) Set the adjustment address to 10 with the adjustment remote controller.
5) Change the adjustment data with the adjustment remote controller to set the Y signal level to 500^{+80}_{-70} mV.
6) Change the adjustment address to store the adjustment data in the memory.

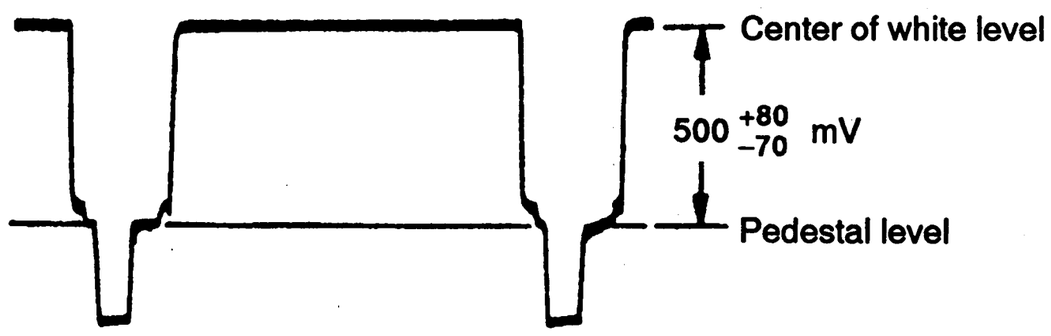

Fig. 7-38.

7-4. ELECTRONIC VIEWFINDER SYSTEM ADJUSTMENT

7-4-1. Horizontal Tilt Adjustment

Mode	Playback
Signal	Alignment tape for operation check Monoscope portion
Specified Value	See Fig. 7-40.

Adjusting method:

1) Adjust the volume array Ⓓ (BRIGHT) for a luminance level which provides appropriate brightness of the CRT screen. (See Fig. 7-41.)
2) Loosen the DY (deflection yoke) tightening nut.
3) Make the image horizontal by rotating DY.
4) Re-tighten the DY tightening nut. (Do not tighten excessively.)

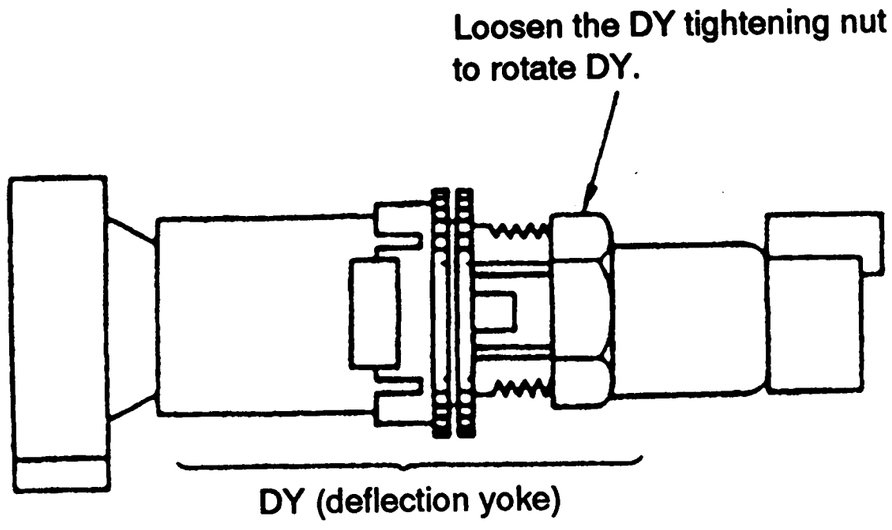

Fig. 7-39.

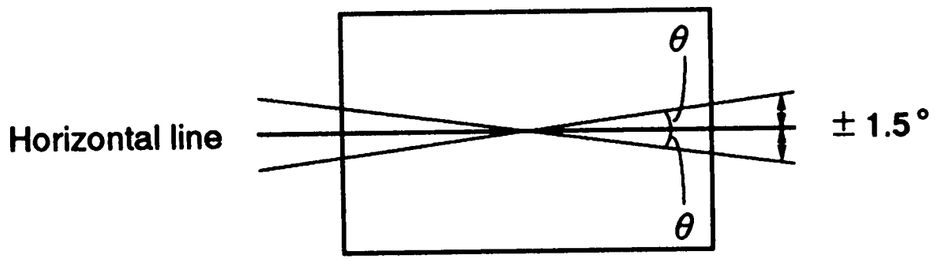

Specified value: Image should be within ± 1.5° of horizontal line.

Fig. 7-40.

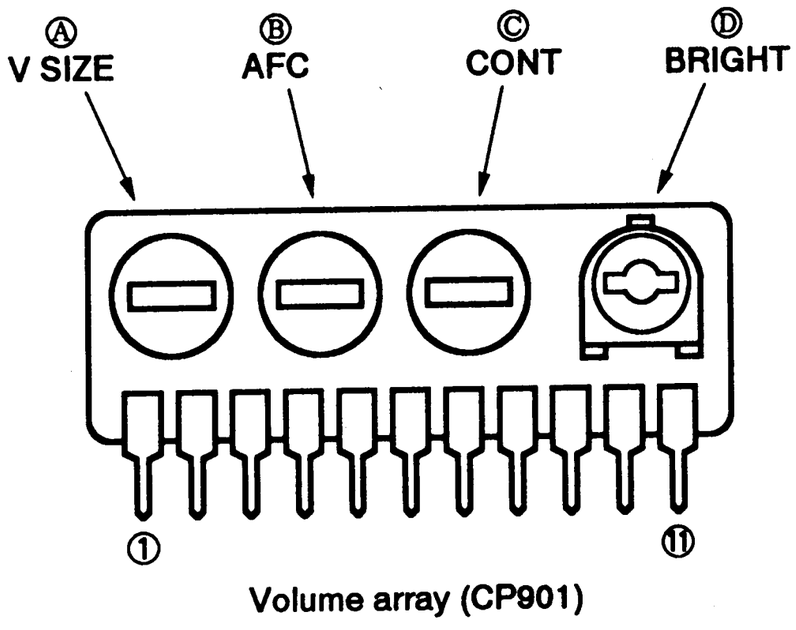

Volume array (CP901)

Fig. 7-41.

7-4-2. Centering Adjustment

Mode	Playback
Signal	Alignment tape for operation check Monoscope portion
Specified Value	See Fig. 7-43.

Adjusting method:

1) Turn the centering adjustment rings to provide an image with even right, left, upper and lower margins.

Note: Since the centering position is affected by the earth magnetism, turn the equipment about 360° horizontally, and make adjustments at the position which exhibits center portion of displacements on the image.

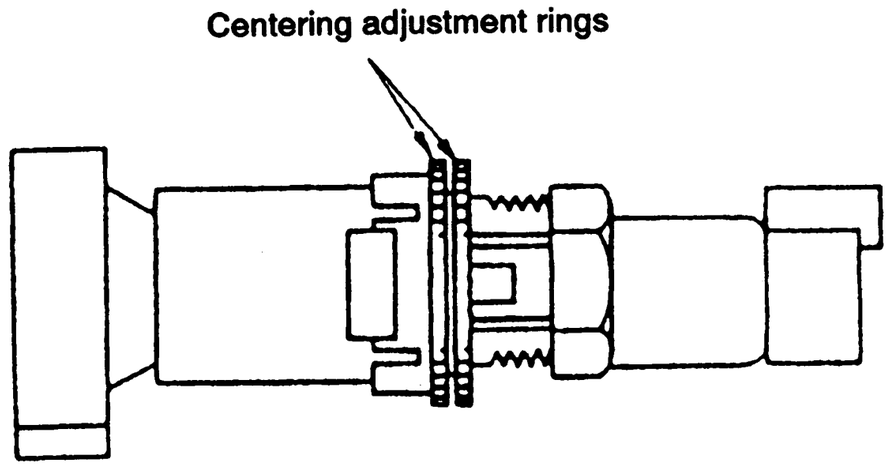

Fig. 7-42.

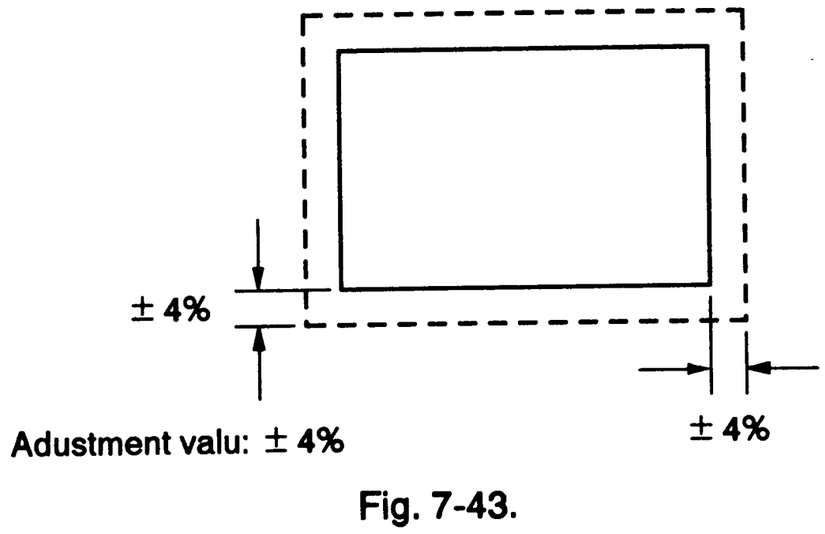

Fig. 7-43.

7-4-3. AFC Adjustment (VF-13 Board)

Mode	E-E or camera stand-by
Signal	Color bar
Measurement Point	C915 ⊕ terminal
Measuring Instrument	Digital voltmeter or oscilloscope (DC range)
Adjustment Element	Volume array Ⓑ (AFC)
Specified Value	2.3 ± 0.1 Vdc

Adjusting method:

1) Adjust to 2.3 ± 0.1 Vdc with the volume array Ⓑ. (Refer to Fig. 7-41.)

7-4-4. Horizontal Amplitude Adjustment (VF-13 Board)

Mode	Playback
Signal	Alignment tape for operation check Monoscope portion
Adjustment Element	C905
Specified Value	8 ± 3%

Adjusting method:

1) Adjust RV901 for focusing.
2) Line up the upper and lower sections of the monoscope image with the upper and lower edges of the screen by rotating the volume array Ⓐ.
   (See Fig. 7-41.)
3) Rotate the volume array Ⓓ to set the brightness to the normal level.
4) Short or open the pattern [A] of the H size adjustment capacitor (C905) to provide horizontal overscans of 8 ± 3% (total of left and right).
   (See Fig. 7-45.)

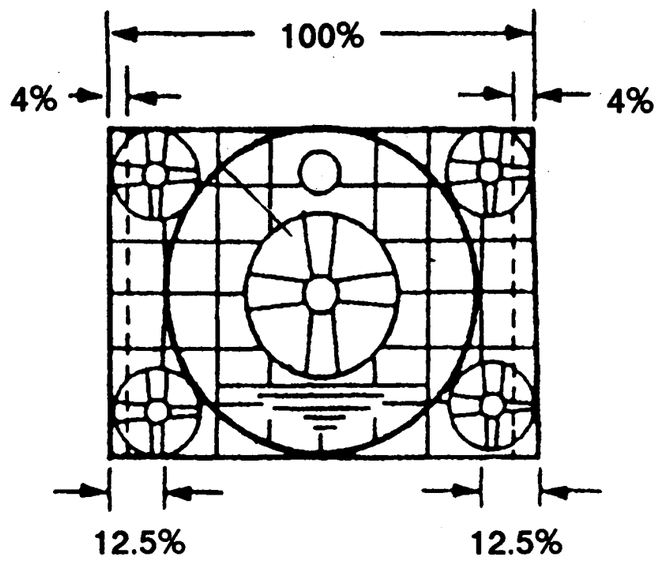

Fig. 7-44.

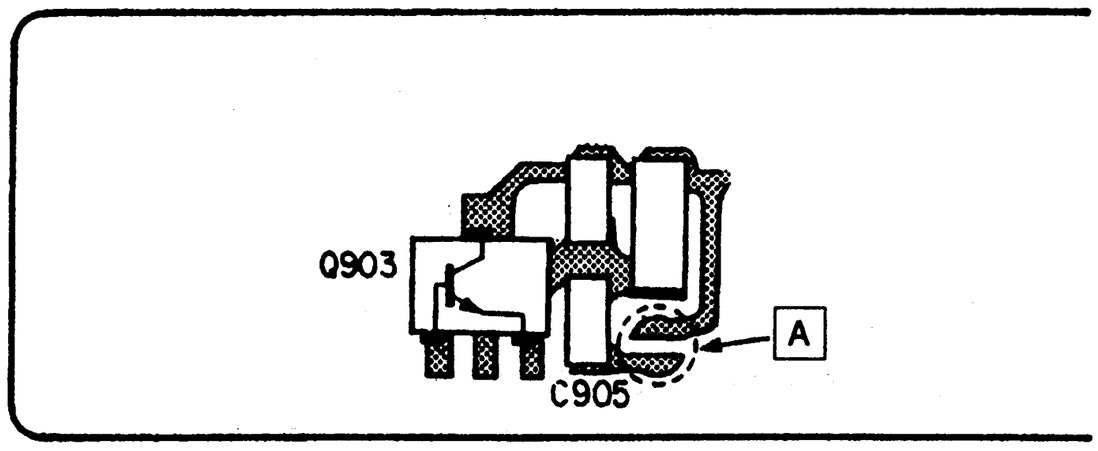

VF-13 board (Conductor side)

A section	H size
Open	Small
Short	Large

Fig. 7-45.

7-4-5. Vertical Amplitude Adjustment (VF-13 Board)

Mode	Playback
Signal	Alignment tape for operation check Monoscope portion
Adjustment Element	Volume array Ⓐ (V size)
Specified Value	8 ± 3%

Adjusting method:

1) Adjust with the volume array Ⓐ to set the vertical direction overscan to 8 ± 3% (total of upper and lower).
   (Refer to Fig. 7-41.)

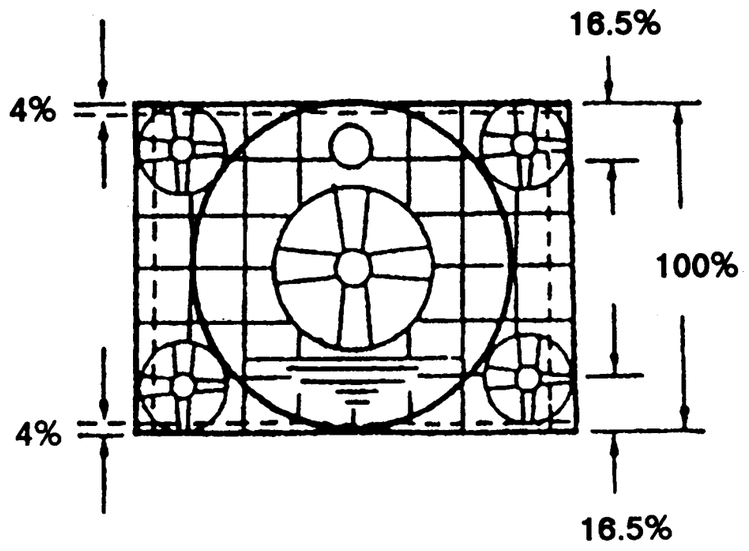

Fig. 7-46.

7-4-6. Brightness and Contrast Adjustment (VF-13 Board)

Mode	Playback
Signal	Alignment tape for operation check Monoscope portion
Adjustment Element	Brightness: Volume array Ⓓ (BRIGHT) Contrast: Volume array Ⓒ (CONT)

Adjusting method:

1) Adjust the volume arrays Ⓓ and Ⓒ alternately until the bright and dark areas of a gray scale are displayed correctly.
   (See Fig. 7-41.)
   (The bright area should not be as bright as the cross-hatches in the monoscope circle, and the brightness of the dark areas should be such that discrimination between the darkest and third darkest area is possible.)

7-4-7. Focus Adjustment

Mode	Playback
Signal	Alignment tape for operation check (WR5-8NSE) Monoscope portion
Adjustment Element	RV901

Adjusting method:

1) Adjust RV901 to obtain the best focusing.

SECTION 8
MECHANISM BLOCK ADJUSTMENTS

Mechanism Block Adjustments

Refer to the separate "8 mm Video Mechanism Block Adjustment Manual Ⅲ U Mechanism" for adjustment and checking of the mechanism block and for replacement of mechanical parts.
Refer to the following for setting of track shift mode.

8-1. TRACK SHIFT MODE SETTING

[Setting method]

- Connect Pin ① (TEST B) and Pin ③ (TEST A) of CN214 on the FD-13 board to Pin ② (GND). (See Fig. 8-1.)

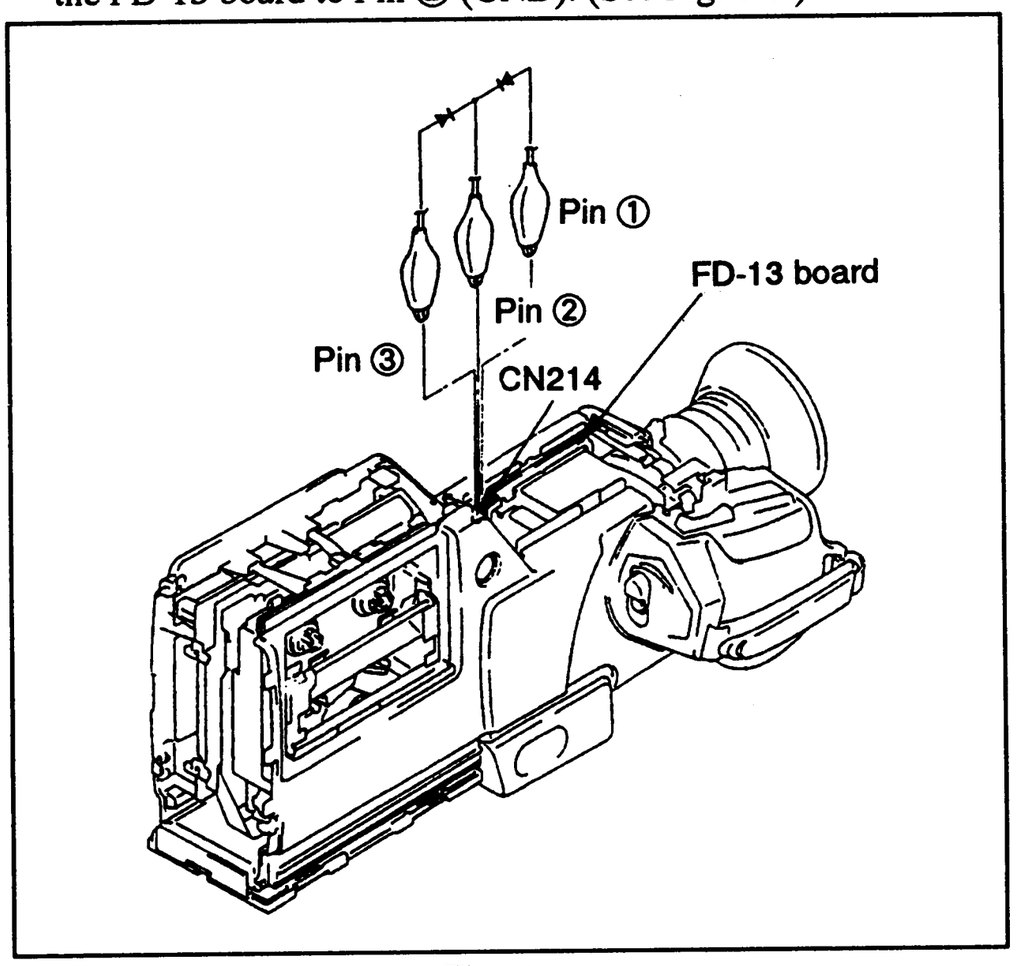

Fig. 8-1.

8-2. PREPARATION FOR ADJUSTMENT

1) Perform cleaning of the tape running surface (tape guides, drum, capstan shaft, and pinch roller).
2) Connect the oscilloscope.
   CH 1: Pin ④ (RF CH2) of CN802 on the MR-19 board
   External trigger: Pin ② (RF SWP) of CN802 on the MR-19 board
3) Play back the alignment tape (WR5-1NP: 8-967-995-02) for tracking.
4) Confirm that the RF waveform on oscilloscope at both entrance and exit sides is flat. (See Fig. 8-2.)
   Perform the adjustment described below if not flat.

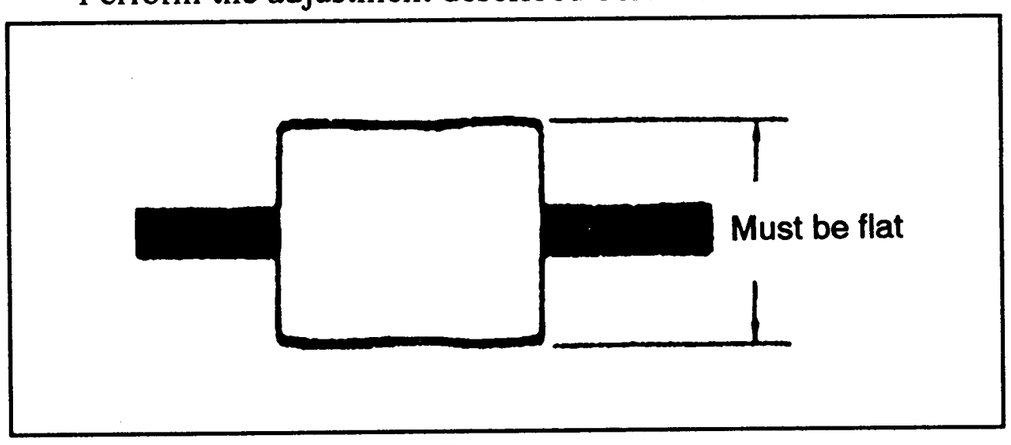

Fig. 8-2.

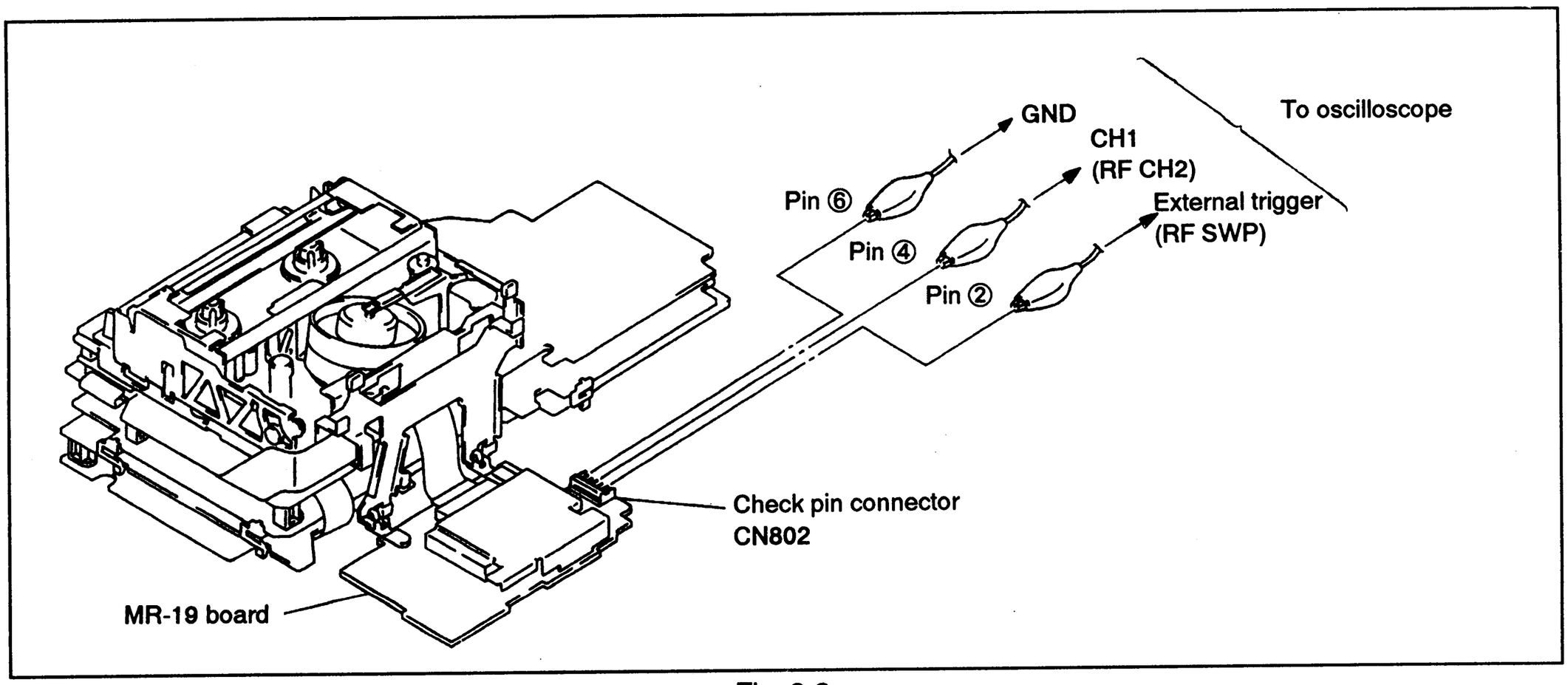

Fig. 8-3.

SECTION 9
VIDEO BLOCK ADJUSTMENTS

During adjustment, see the arrangement diagram for adjustment parts from page 354.

9-1. PRE-ADJUSTMENT PREPARATIONS

Use the following measuring instruments for adjustment of the VTR block.

9-1-1. Required Equipment

1) Monitor TV
2) Dual trace oscilloscope of over 10 MHz band, incorporates delay mode. (Use 10:1 probe unless otherwise specified)
3) Frequency counter
4) Pattern generator with video output terminal (See 9-1-3.)
5) Digital voltmeter
6) Audio generator
7) Audio level meter
8) Audio distortion meter
9) Audio attenuator
10) Regulated power supply (over 3A voltage capacitance)
11) Alignment tapes
    - For tracking adjustment (WR5-1NP)
      Parts Code: 8-967-995-02
    - For video frequency characteristics adjustment (WR5-7NE)
      Parts Code: 8-967-995-13
    - For L mode operation check for SP (WR5-5NSP)
      Parts Code: 8-967-995-42
      or (WR5-4NSP)
      Parts Code: 8-967-995-41
      for LP (WR5-4NL)
      Parts Code: 8-967-995-51
      for AFM stereo operation check (WR5-9NS)
      Parts Code: 8-967-995-23
    - E mode operation check (ME tape)
      for SP (WR5-8NSE)
      Parts Code: 8-967-995-43
      for LP (WR5-8NLE)
      Parts Code: 8-967-995-52

9-1-2. Precautions

1. Switch setting

Unless otherwise specified, set switches to the following positions.

- POWER (CAMERA/OFF/VTR) switch
  (S743 on VK-2 board).....VTR
- DIGITAL EFECT switch (S761 on DK-3 board).....OFF
- Hi8 switch (S770 on DK-3 board).....AUTO

2. Connection to the camera block

The camera block is not required other than "Battery down adjustment". Perform adjustment with the camera block removed; however, only DC-DC converter should be connected. Connect as follows.

- DC-DC converter CN011 — CN221 on SS-95 board
  Extension cable: 7-pin flat cable (1.25 mm pitch)
  Parts code: J-6082-033-A
- DC-DC converter CN010 — CN220 on SS-95 board
  Extension cable: 8-pin flat cable (1.25 mm pitch)
  Parts code: J-6082-032-A
- DC-DC converter CN012 — W602 on FU-70 board
  Extension cable: 4-pin cable (2 mm pitch)
  Parts code: J-6080-871-A

3. Connection to the left cabinet

When the view finder and adjustment remote commander are not required, neither the left cabinet is required. Remove the cabinet by disconnecting the following sections:

- CN821 on SW113 board (3-pin)
- CN811 on VJ-16 board (4-pin)
- CN812 on VJ-16 board (7-pin)
- CN861 on HJ-5 board (11-pin)

4. Connection to the right cabinet

Following connections are required for driving the camera block. Connect with using extension cables.

- CN211 on FD-13 board — W227 on SS-95 board
  Extension cable: 20-pin flat cable (1 mm pitch)
  Parts code: J-6082-031-A

Since the following connections are not required for adjustments, remove them if necessary.

- CN212 (26-pin) on FD-13 board.....LCD
- CN301 (6-pin) on PC-35 board.....Stereo microphone jack
- CN312 (6-pin) on PC-35 board.....Headphone jack
- CN310 (5-pin) on PC-35 board.....Monaural microphone jack
- CN309 (4-pin) on PC-35 board.....Narration microphone
- CN232 (2-pin) on AS-22 board.....Speaker

Since the following connections are not required other than audio circuit adjustment, remove them if necessary.

- CN306 (10-pin) on PC-35 board.....Audio selection switch
- CN311 (3-pin) on PC-35 board.....Level meter
- CN302 (6-pin) on PC-35 board.....REC LEVEL VR
- CN228 (4-pin) on SS-95 board.....Audio monitor switch, lithium battery

5. Upper cabinet (stereo microphone, operation panel)

Since the power switch and the operation switch are on the upper cabinet, be sure to connect the upper cabinet. Connect the following connector to the right cabinet. Other connections are not required.

- CN701 on CK-18 board — W202 (15-pin) on FD-13 board

6. Connection to DI-21 board and DC-DC converter (2)

Since the Y, C and sync signals pass through the DI-21 board, the following connections are required. When adjusting on the VI-66 and SS-95 boards, connect as follows with extension cables.

- CN304 on PC-35 board — DC-DC converter (2) CN004
  Extension cable: 3-pin cable (2 mm pitch)
  Parts code: J-6080-872-A or J-6080-863-A
- CN408 on VI-66 board — CN601 on DI-21 board
  Extension cable: 2-pin cable (1.5 mm pitch)
  Parts code: J-6080-912-A
- CN414 on VI-66 board — CN602 on DI-21 board
  Extension cable: 2-pin cable (1.5 mm pitch)
  Parts code: J-6080-912-A

7. Connection between the PC-35 board and the SS-95/MR-19 boards

When adjusting on the VI-66 and SS-95 boards, extend or remove the connectors as follows.

- Connect:
  CN307 on PC-35 board — W002 on SS-95 board
  Extension cable: 22-pin flat cable (1 mm pitch)
  Parts code: J-6082-037-A
- Disconnect:
  CN303 on PC-35 board — CN805 on MR-19 board (8-pin)

As for the other connections, refer to item 4 or 6.

9-1-3. Connection of Equipment

Connect equipments as shown in Fig. 9-1 according to the indication of the input terminal (S VIDEO or VIDEO) and set POWER (CAMERA/OFF/VTR) switch (S743 on VK-2 board) to VTR position for adjustments; however, except when performing "digital picture circuit adjustment".

The input terminal is indicated in the signal column ( ). Unless otherwise specified, any of these input terminals can be used. Further, S VIDEO IN terminal has priority. When adjusting using VIDEO IN terminal for input, remove a connector from S VIDEO IN terminal.

Note: In case an adjustment is performed with using VIDEO input, although instructed to adjust with using S VIDEO input, the required specification may not be satisfied. Be sure to follow the indications.
When adjusting with using a VTR that has the S video output terminal as a signal source, according of which performance of this unit is effected. Be sure to use a pattern generator with Y/C separation output terminal as possible.

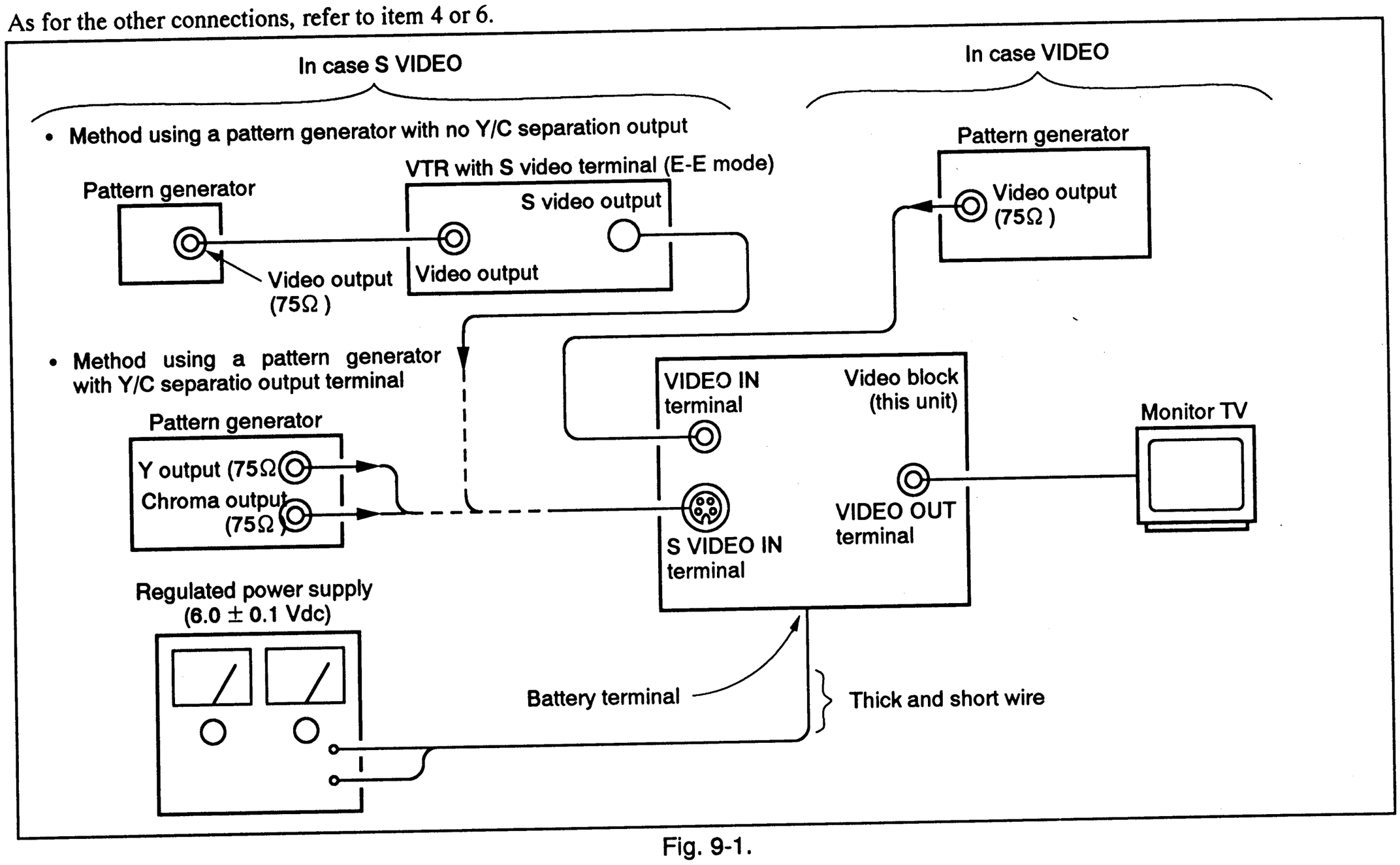
In case S VIDEO
In case VIDEO
• Method using a pattern generator with no Y/C separation output
Pattern generator
VTR with S video terminal (E-E mode)
S video output
Video output (75Ω)
Video output
Pattern generator
Video output (75Ω)
• Method using a pattern generator with Y/C separatio output terminal
Pattern generator
Y output (75Ω)
Chroma output (75Ω)
VIDEO IN terminal
Video block (this unit)
S VIDEO IN terminal
VIDEO OUT terminal
Monitor TV
Regulated power supply (6.0 ± 0.1 Vdc)
Battery terminal
Thick and short wire

Fig. 9-1.

9-1-4. Input Signal Check

Since the video output signal obtained from the pattern generator is used as an adjusting signal for the VTR block, this video output signal should be within the required specifications.

1. When S VIDEO Input

Connect an oscilloscope to Y signal terminal of S VIDEO IN terminal (J901 on PJ-22 board) and confirm that the sync component of Y signal is approximately 0.3 Vp-p and that the amplitude of the video signal is approximately 0.7 Vp-p. (Furthermore, if using a VTR with S video output terminal, confirm that there are no residual chroma and burst signals.) Connect an oscilloscope to the chroma signal of the S VIDEO IN terminal and confirm that the burst signal amplitude of the chroma signal is approximately 0.3 Vp-p with flat characteristics, and that the signal amplitude ratio between the burst and chroma signals is 0.30:0.66. The Y and chroma signals used for the video block adjustment are shown in Fig. 9-2.

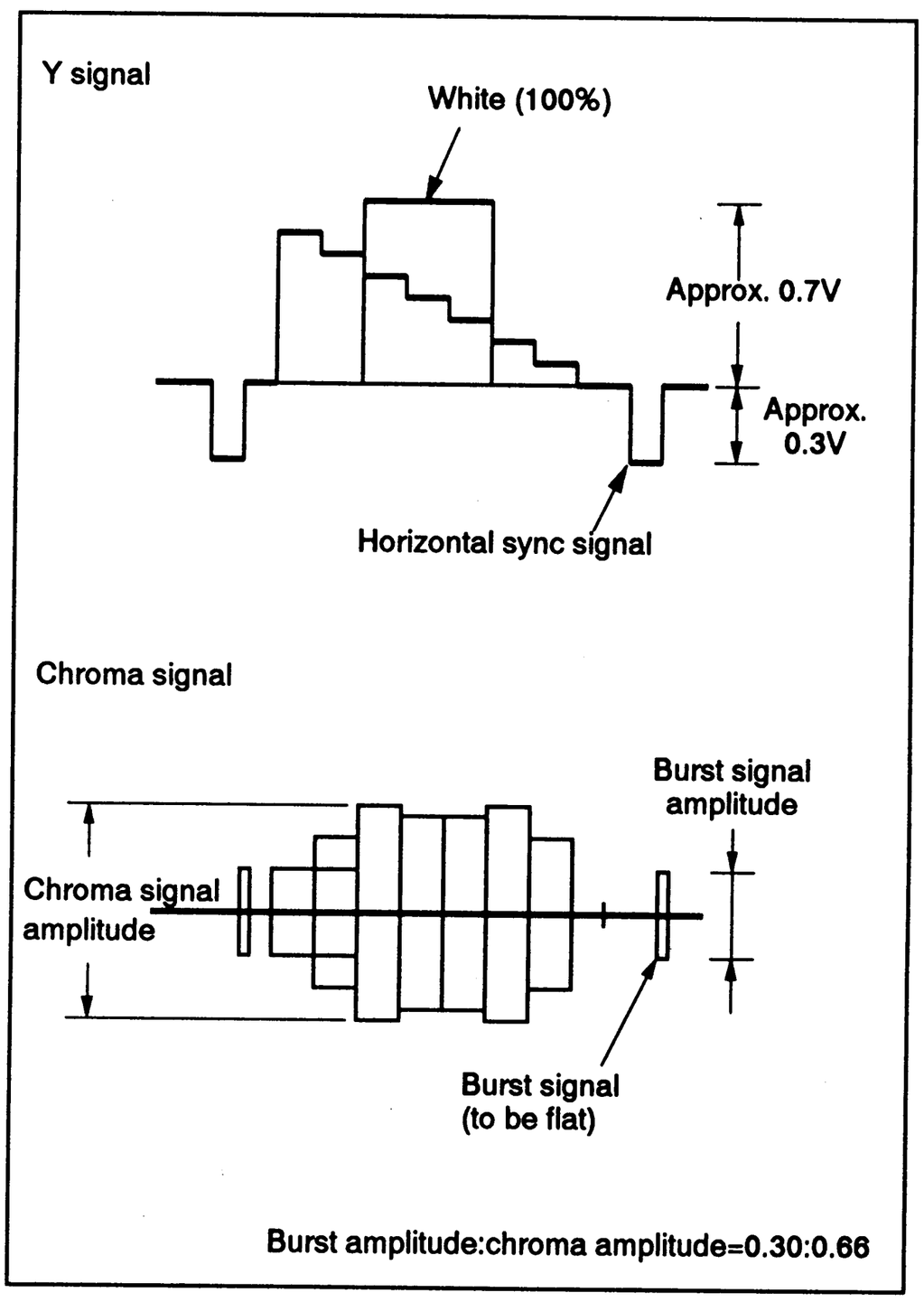

Fig. 9-2. Color bar signal of pattern generator

2. When VIDEO Input

Connect an oscilloscope to VIDEO IN terminal (J902 on PJ-22 board) and confirm that the amplitude of the video sync signal is approximately 0.3V, that the video block amplitude is approximately 0.7V, that the burst signal amplitude is approximately 0.3V with flat characteristics, and that the signal level ratio between the burst signal and "Red" signal is 0.30:0.66. The video signal (color bars) used for VTR block adjustment are shown in Fig. 9-3.

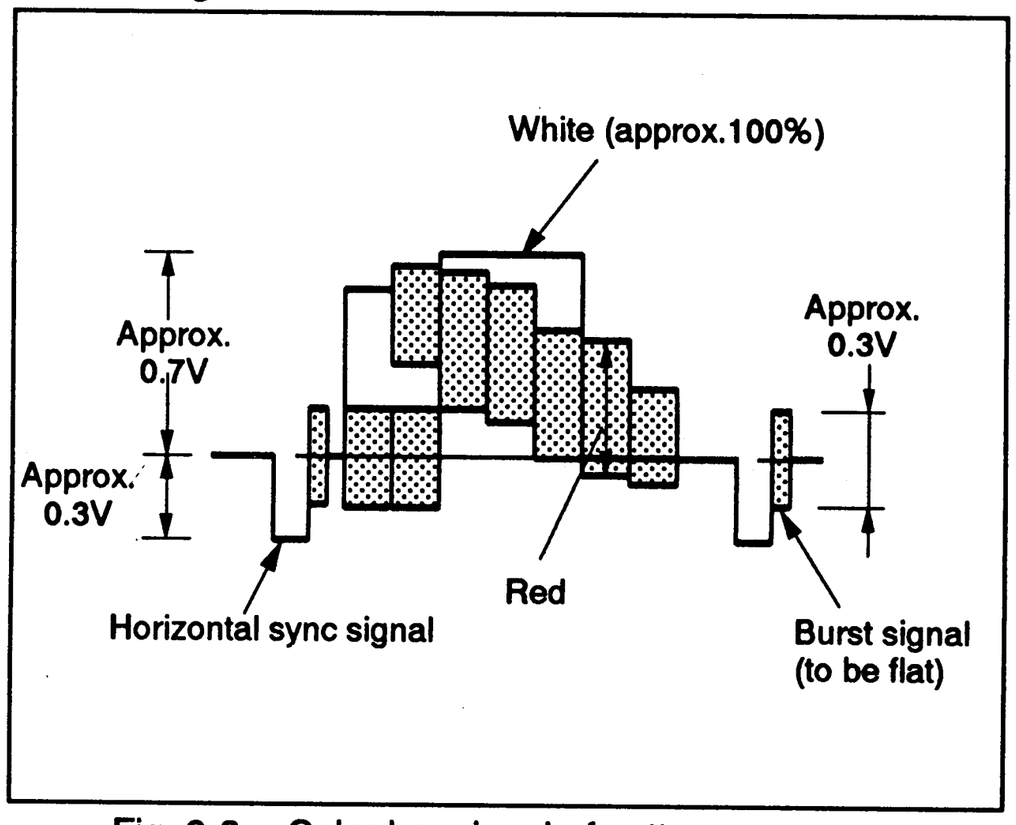

Fig. 9-3. Color bar signal of pattern generator

9-1-5. Alignment Tape

The following alignment tapes are available.

Use the tape indicated in the signal column; however, in case there is no type indication in the signal column, use any tape for operation check.

Name	REC mode	Type	Speed	Contents		Usage
				Video area	PCM area	
Tracking (WR5-1NP)	L	MP	SP	CH2: 1 MHz tape pass adjustment signal Switching position adjustment marker (CH1: 9 MHz)		Tape pass adjustment Switching position adjustment
Video Frequency Characteristics (WR5-7NE)	E	ME	SP	RF sweep: 0 to 15 MHz Markers: 2, 4.5, 7, 8.5, 10 MHz		Frequency characteristics adjustment
Operation Check (WR5-4NSP or WR5-5NSP)	L	MP	SP	• Video signal Color bar: 4 min. Monoscope: 4 min. • Audio signal (AFM) 400 Hz, 60% modulation	• Audio signal (PCM) Monoscope: 20 Hz 20sec 400 Hz 20sec 14 kHz 20sec } Repeat four times. Color bar: 1 kHz 4 min.	Operation check
WR5-8NSE	E	ME	SP		• Audio signal (PCM) 400 Hz	
WR5-4NL	L	MP	LP	• Video signal Color bar: 4 min. Monoscope: 4 min. • Audio signal (AFM) 400 Hz, 60% modulation		
WR5-8NLE	E	ME	LP		• Audio signal (PCM) 400 Hz	
AFM stereo operation check (WR5-9NS)	L	MP	SP	• Video signal Color bar: 4 min. Monoscope: 4 min. • Audio signal (AFM) L ch: 400 Hz L+R: 1.5 MHz ± 60 kHz R ch: 1 kHz L–R: 1.7 MHz ± kHz	• Audio signal (PCM) Monoscope: 20 Hz 20 sec 400 Hz 20 sec 14 kHz 20 sec } Repeat four times. Color bar: 1 kHz 4 min.	AFM stereo PB matrix adjustment

Note: Recording mode
L ·····Conventional mode
E ·····Hi8 (high band) mode

Tape type
MP·····Applied type metal tape
ME·····Evaporated type metal tape

Table 9-1.

75% color bar signal recorded on an alignment tape is shown in Fig. 9-4.

Note: Measured at VIDEO OUT terminal (75Ω termination).

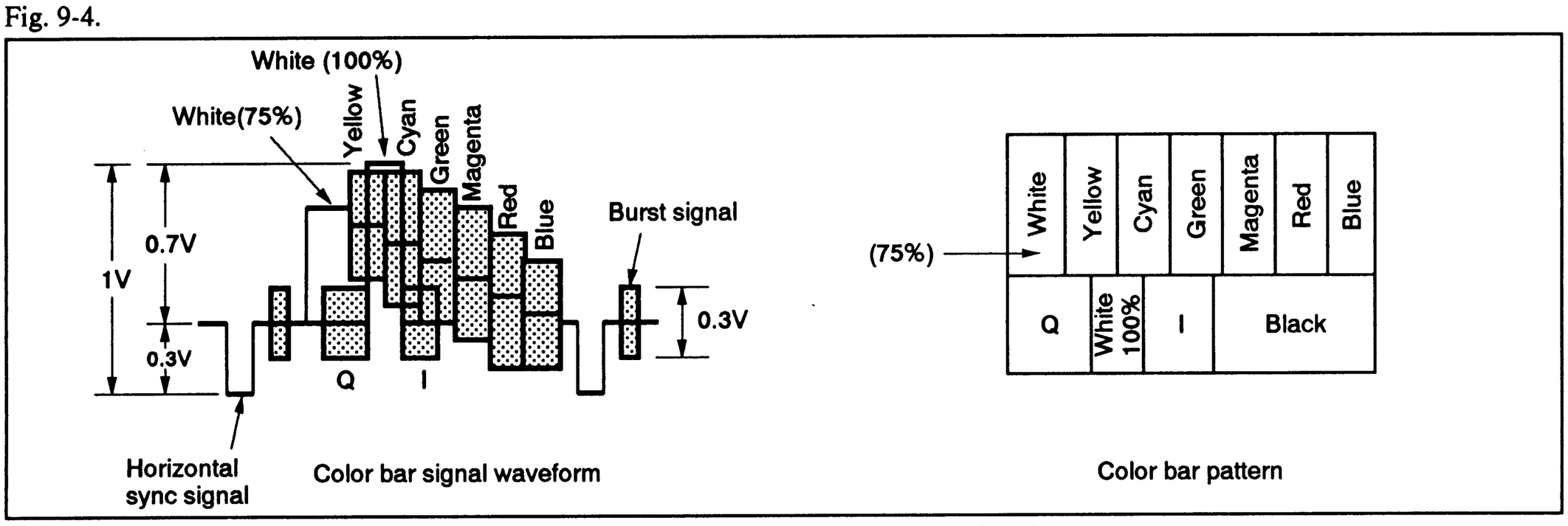

Fig. 9-4. Alignment tape color bar signal

9-1-6. I/O Level Impedance

Video input Pin jack
Input signal: 1 Vp-p, 75Ω unbalanced, negative sync
Video output Pin jack
Output signal: 1 Vp-p, 75Ω unbalanced, negative sync
S video input: (4-pin mini DIN)
Luminance signal: 1 Vp-p, 75Ω unbalanced, negative sync
Chroma signal: 0.286 Vp-p, 75Ω unbalanced
S video output: (4-pin mini DIN)
Luminance signal: 1 Vp-p, 75Ω unbalanced, negative sync
Chroma signal: 0.286 Vp-p, 75Ω unbalanced
Audio input Pin jack
Input level: –7.5 dBs (0 dBs=0.775 Vrms)
Audio output Pin jack
Specified output: –7.5 dBs (when 47 kΩ loaded)
Output impedance: Less than 2.2 kΩ

9-1-7. Recording Mode (E Mode/L Mode) Selection

Recording mode (E mode/L mode) of this unit can be selected as follows; however, the playback mode (E mode/L mode) can be selected automatically according to the recording mode of a tape to be used.

Hi8 switch (L mode/E mode selection switch) (S770 on DK-3 board)	Tape	Recording mode
AUTO (E mode)	ME	E
	MPHG	
	MP	L
OFF (L mode)	ME	L
	MPHG	
	MP	

Table 9-2.

9-1-8. Service Modes

This unit is equipped with service modes for adjustment and operation checking. There are following two service modes, and switching between them is by connection between GND and Pin (B6) of the check point array on the VC-55 board.

Service Mode	Function	Connection between GND and Pin (B6) of check point array
Status indication mode	For video block adjustment, operation checking	Open (no connection)
EVR adjustment mode	For adjustment of camera block	Shorted

(Refer to "Camera Block Adjustment" for details on the EVR adjustment mode.)

Note: When using the service mode, activating the camera block is required.

1. Invoking service mode

1) Connect the adjustment remote commander to REMOTE terminal (J813 on VJ-6 board) of the main unit.
2) Set HOLD switch of the adjustment remote commander to HOLD position (SERVICE position).

The status indication mode is invoked by the above operation. (To select the EVR adjustment mode, connection between Pin (B6) of the check point array and GND is required.)

2. Indication on adjustment remote commander LCD in status indication mode

Note: In categories 1 through 4, the same information is displayed on the EVF screen and on the monitor screen (when the data screen is ON).

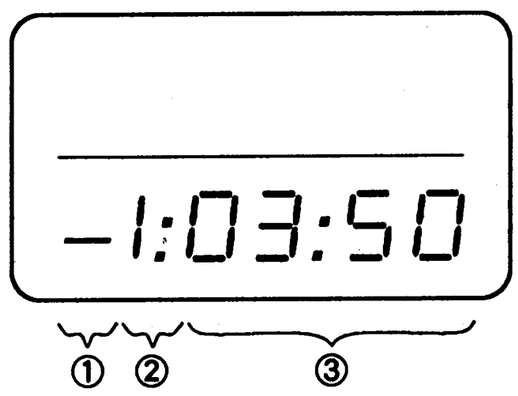

①..... Minus segment flashes to indicate that the service mode has been invoked.
②..... Indicates service mode category.
③..... Indicates battery voltage, LAST EMG, PRESET EMG, or MODE SW CODE according to current category.

Fig. 9-5.

3. Category selection and indication in each category

Select the desired category with FF button of the adjustment remote commander. There are four categories (1 through 4) and the indications are different for each.

Category	Indication on LCD
1	A/D conversion value for battery voltage (decimal indication) Note 1
2	LAST EMG (last emergency) Note 2 Refer to "Service Mode Error Indications".
3	PRESENT EMG (current emergency) Note 3 Refer to "Service Mode Error Indications".
4	MODE SW CODE (mechanism status) 00:00 EJECT 00:01 I.A 00:02 UNLOAD 00:03 I.B 00:04 STOP (threading completed) 00:05 I.C 00:06 RP(REC, PB, FF, REW, CUE, REVIEW, PAUSE) 00:AA Mode switch error

Notes: 1) Indicates a value proportional to the battery voltage.
2) LAST EMG indicates the error occurred last.
3) If two or more errors are occurred during using the unit, PRESENT EMG indicates the status sequentially by FF button (EVR No. NEXT).

Table 6-3.

- **Service mode error indication**

Error Status	PRESENT EMG Indication	LAST EMG Indication
No error	00 : 00	00 : 00
Loading motor	00 : 01	00 : 01
REEL FG error during unthreading	00 : 02	00 : 02
REEL FG error not during unthreading	00 : 03	00 : 03
Capstan error	00 : 04	00 : 04
DRUM PG error (0) when starting drum	00 : 05	00 : 05
DRUM PG error (1) when starting drum	01 : 05	01 : 05
DRUM PG error (2) when starting drum	02 : 05	02 : 05
No DRUM PG (0) when starting drum	00 : 06	00 : 06
No DRUM PG (1) when starting drum	01 : 06	01 : 06
No DRUM PG (2) when starting drum	02 : 06	02 : 06
DRUM FG error (0) when drum stationary	00 : 07	00 : 07
DRUM FG error (1) when drum stationary	01 : 07	01 : 07
DRUM FG error (2) when drum stationary	02 : 07	02 : 07
No DRUM PG (0) when drum stationary	00 : 08	00 : 08
No DRUM PG (1) when drum stationary	01 : 08	01 : 08
No DRUM PG (2) when drum stationary	02 : 08	02 : 08
Phase error (0) when drum stationary	00 : 09	00 : 09

(1) During tape threading
(2) During tape unthreading
(0) Others

Table 9-4.

4. Releasing service mode

The service mode is released by returning HOLD switch of the adjustment remote commander to NORMAL position or by disconnecting the adjustment remote commander from REMOTE terminal.

9-1-9. Test Modes

This unit has three test modes which are invoked by connecting the terminals of CN214 on the FD-13 board with a diode (1SS119 or its parity).

Test Mode	Connection of CN214 on FD-13 Board	Function
1	Pin ③ (K IN 5) Pin ② ($\overline{\text{K OUT 9}}$)	1. Switching position adjustment is possible. 2. Error detection disabled.
2	Pin ① (K IN 6) Pin ② ($\overline{\text{K OUT 9}}$)	1. Battery voltage A/D converted value is displayed on LCD. (When recording) (Same as the service mode category 1.) **Note**: Playback picture is not be displayed.
3	Pin ③ (K IN 5) 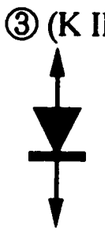 Pin ② ($\overline{\text{K OUT 9}}$) Pin ① (K IN 6)	1. For tape path adjustment Tracking shift

Table 9-5.

9-2. POWER SUPPLY CHECKS

9-2-1. Power Supply Voltage Check (DC-DC converter 1)

Mode	E-E
Measurement Instrument	Digital voltmeter
SS 5V check	
Measurement Point	Pin ① of CN010, Pin ⑦ of CN011
Specified Value	4.90 ± 0.15 Vdc
VI 5V check	
Measurement Point	Pins ③ and ④ of CN010
Specified Value	4.85 ± 0.15 Vdc
AUDIO 5V check	
Measurement Point	Pin ⑧ of CN010, Pin ④ of CN011
Specified Value	4.90 ± 0.15 Vdc

Checking method:

1) Each power supply voltage meets the specified value.

9-2-2. Power Supply Voltage Check (DC-DC converter 2)

Mode	E-E
Measurement Instrument	Digital voltmeter
AUDIO 8V check	
Measurement Point	Pin ① of CN004
Specified Value	8.0 ± 0.15 Vdc
EVF 5V check	
Measurement Point	Pin ⑤ of CN001
Specified Value	4.95 ± 0.15 Vdc
LINCS 5.7V check	
Measurement Point	Pin ④ of CN003
Specified Value	5.7 ± 0.3 Vdc4.90 ± 0.15 Vdc

Checking method:

1) Each power supply voltage should meet the specified value.

Mode	Playback
Measurement Instrument	Digital voltmeter
DM 4.5V	
Measurement Point	Pin ① of CN002
Specified Value	4.40 ± 0.15 Vdc

Checking method:

1) DM4.5V power supply meets the specified value.

9-3. SYSTEM CONTROL SYSTEM ADJUSTMENTS

9-3-1. Clock Precision Adjustment (SS-95 Board)

Mode	E-E
Measurement Point	Pin ⑥⑨ of IC101 (check land "X'tal")
Measuring Instrument	Frequency counter
Adjusting Element	CT101
Specified Value	512.004 ± 0.001 Hz

Adjusting method:

1) Adjust CT101 to 512.004 ± 0.001 Hz.

9-3-2. Battery Down Adjustment (SS-95 Board)

Note: Connect the camera block before adjustment.

Mode	E-E
Measurement Point	Confirm on the monitor TV screen or LCD indication
Measuring Instrument	
Adjusting Element	RV001
Specified Value	2:83 to 2:85

Note: If the category 1 is selected by the adjustment remote commander, diode connection (category 1 setting) is not required. (Refer to "Service Mode".)

Connections:

1) Connect a regulated power supply and digital voltmeter as shown in Fig. 9-6.

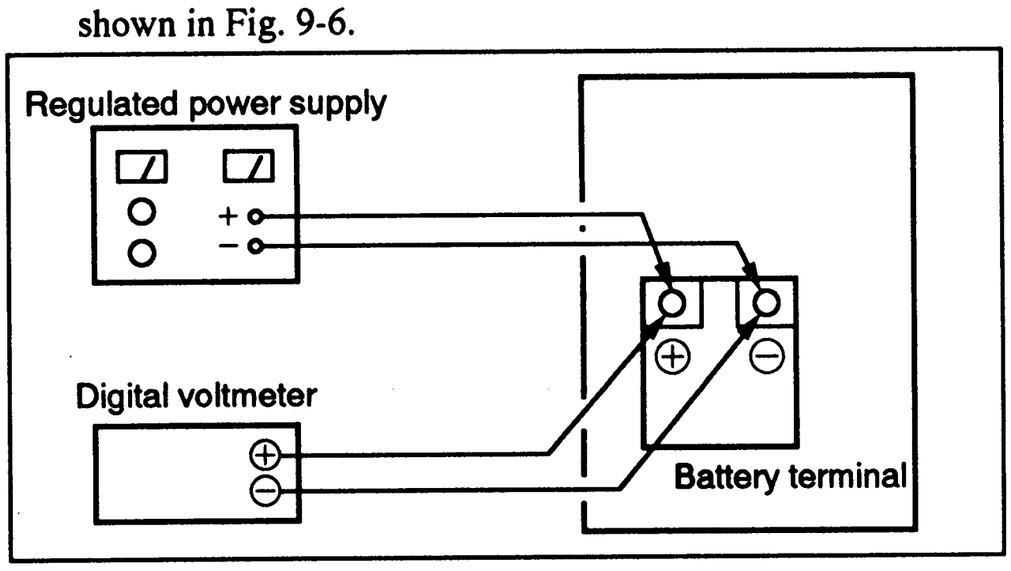

Fig. 9-6.

2) Connect CN214 on the FD-13 board with a diode (1SS119 or parity). (test mode 2)

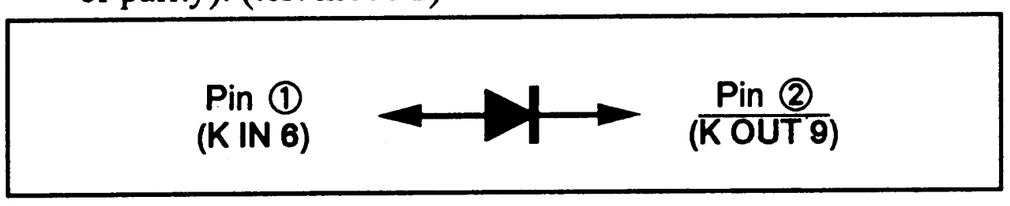

Fig. 9-7.

Adjusting method:

1) Set the power supply voltage to 5.65 ± 0.01 Vdc.
2) Press DATA SCREEN button (S741 on VK-2 board) to display a battery voltage on the monitor screen.
3) Adjust RV001 so that the LCD indication of the adjustment remote commander is "2:83" or "2:85". (Turning point from 83 to 85.)

9-3-3. Battery Down Confirmation

Note: Connect the camera block before adjustment.

Mode	Camera REC
Subject	All black (cover lens with black cap)
Measurement Point	Confirmation on the LCD indication on the FD-13 board
Measuring Instrument	
Specified Value	Battery pre-end indication at 5.85 ± 0.01 Vdc or at 5.78 ± 0.01 Vdc. (*1) Battery pre-end indication at 5.67 ± 0.01 Vdc. (*2)

*1: ⚠ mark on the LCD blinks slowly.

*2: ⚠ mark on the LCD blinks rapidly.

Connections:

1) Connect a regulated power supply and digital voltmeter as shown in Fig. 9-6.
2) Remove the diode used for battery down adjustment.

Checking method:

1) Set the power supply voltage to 6.5 ± 0.1 Vdc and select the camera REC mode.
2) Slowly lower the power supply voltage to 5.85 ± 0.1 Vdc.
3) Confirm that the battery pre-end indication is made on the LCD. If not, slowly lower the power supply voltage to 5.78 ± 0.01 Vdc and reconfirm.
4) Slowly lower the power supply voltage to 5.78 ± 0.01 Vdc.
5) VTR becomes shut-off and confirm that the battery pre-end indication (*2) is made.

9-4. SERVO SYSTEM ADJUSTMENTS

9-4-1. PWM Oscillating Frequency Adjustment (SS-95 Board)

Mode	Playback
Signal	Arbitrary tape
Measurement Point	Pin ⑩ of IC204
Measuring Instrument	Frequency counter
Adjusting Element	RV201
Specified Value	480 ± 2 kHz

Adjusting method:

1) Adjust RV201 to 480 ± 2 kHz.

9-4-2. Capstan FG Adjustment (SS-95 Board)

Mode	Recording (LP mode) Note
Signal	Color bar
Measurement Point	TP200 (Pin ⑧ of IC202: CAP VS)
Measuring Instrument	Oscilloscope
Adjusting Element	RV200
Specified Value	Minimum level fluctuation

Note: Connect Pins ⑥ and ④ of CN206 on the FD-13 board and select the LP recording mode.

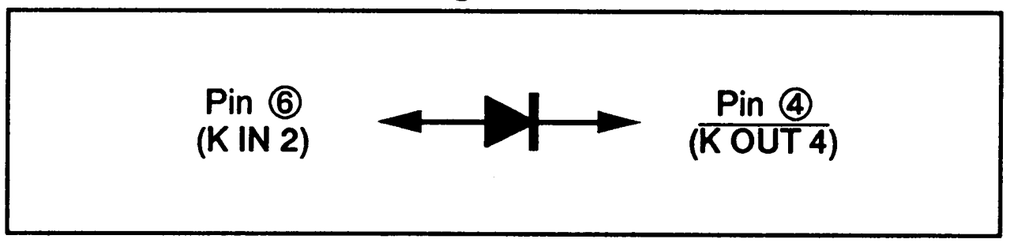

Fig. 9-8.

Adjusting method:

1) Adjust RV200 so that the level fluctuation of CAP VS signal becomes minimum.

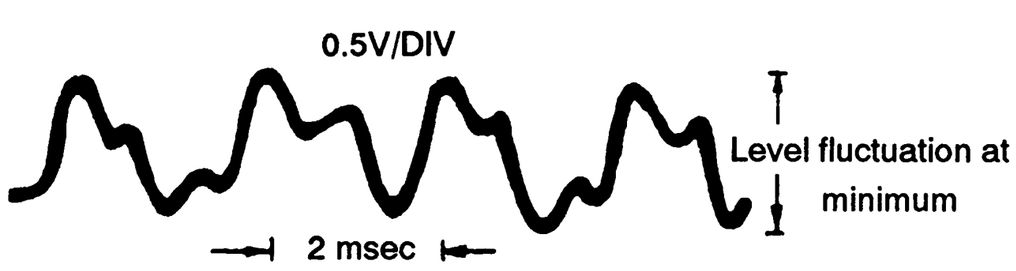

Fig. 9-9.

9-4-3. Switching Position Adjustment (SS-95 Board)

Mode	Playback
Signal	Alignment tape for tracking adjustment (WR5-1NP)
Measurement Point	CH1: MR-19 board Pin ④ of CN802 (RF CH 2) CH1: MR-19 board Pin ② of CN802 (RF SWP)
Measuring Instrument	Oscilloscope
Adjusting Element	RV002
Specified Value	0 ± 5 μsec

Connections:

1) Connect CN214 on the FD-13 board with a diode (1SS119 or parity). (test mode 1)

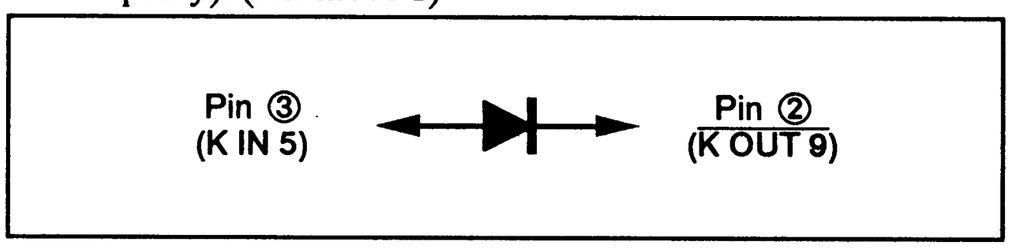

Fig. 9-10.

Adjusting method:

1) Adjust RV002 so that RF CH 2 waveform marker coincides with RF SWP waveform rising edge.

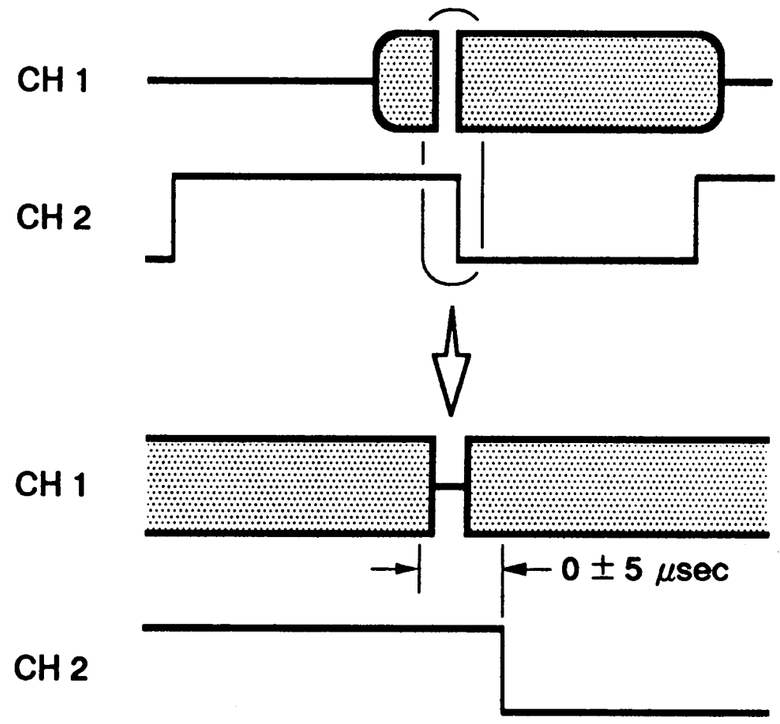

Fig. 9-11.

9-5. VIDEO SYSTEM ADJUSTMENT

The adjustment of the video system should in principle follow the adjustment procedure outlined below. The color video signal supplied from the pattern generator is utilized as the video input signal for video system adjustment in the recording mode. Make sure that the signal matches the specifications given in Fig. 9-3 and "Input Signal Confirmation".
Perform adjustment under following switch settings.

1. DIGITAL EFECT switch (S761 on DK-3 board).....OFF
2. Hi8 switch (S770 on DK-3 board).....AUTO
3. EDIT switch (S771 on DK-3 board).....OFF

[Adjustment procedure]

1) Playback frequency characteristics adjustment
2) Flying erase check
3) Crystal oscillator fo adjustment
4) Y/C separation adjustment
5) Y comb filter adjustment
6) SYNC AGC and loop gain adjustment
7) VI-66 board VIDEO OUT level adjustment
8) PB emphasis adjustment
9) L mode PB Y level adjustment
10) E mode PB Y level adjustment
11) L mode Y FM carrier frequency, deviation adjustment
12) L mode Y FM carrier frequency, deviation adjustment
13) 378fH VCO adjustment
14) Chroma emphasis fo adjustment
15) Carrier balance adjustment
16) Recording current adjustment
17) VIDEO OUT level adjustment
18) Y OUT level adjustment
19) C OUT level adjustment
20) Character generator fo adjustment
21) DDS character position adjustment

9-5-1. Playback Frequency Characteristics Adjustment (MR-19 Board)

Note: The adjusting element for CH2 is shown in parentheses [ ].

Mode	Playback
Signal	Alignment tape for frequency characteristics adjustment (WR5-7NE)
Measurement Point	Pin ③ of CN802 [Pin ④] External trigger: Pin ② (RF SWP) of CN802 Trigger slope: +, [–]
Measuring Instrument	Oscilloscope
Adjusting Element	RV802 [RV803]
Specified Value	When supposing the 4.5 MHz signal level as 3, 8.5 MHz signal level is 2 ± 0.2.

Adjusting method:

1) When supposing the 4.5 MHz signal level as 3, adjust RV802 [RV803] so that the 8.5 MHz signal level is 2 ± 0.2.

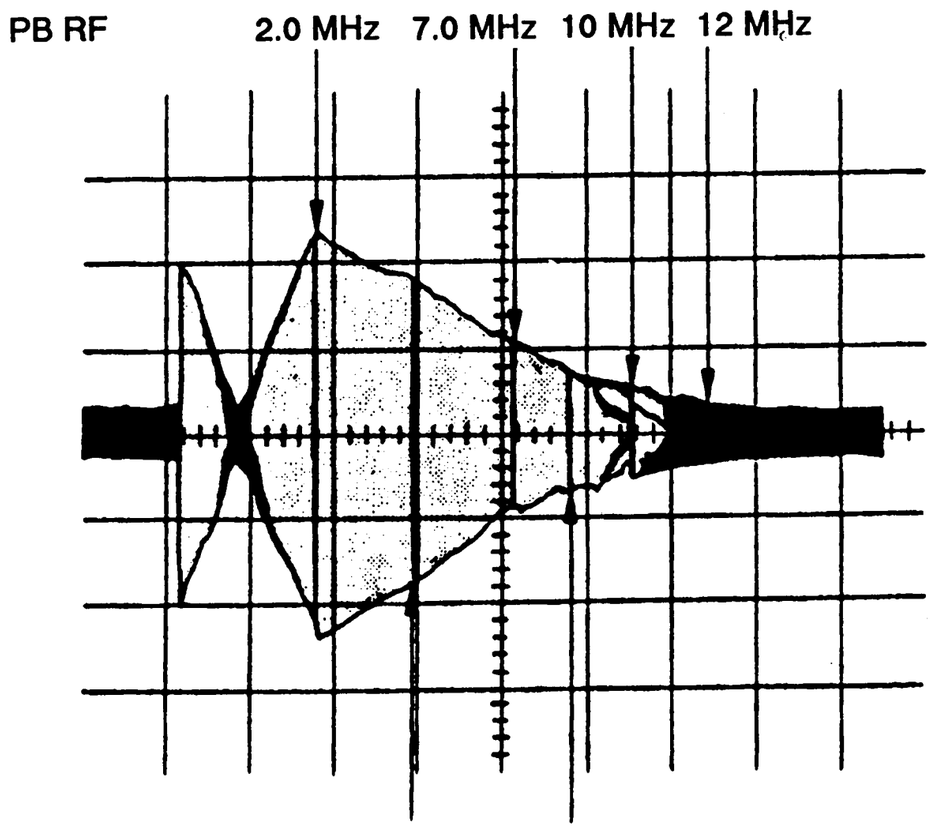

Fig. 9-12.

9-5-2. Flying Erase Check (MR-19 Board)

Mode	REC
Signal	Arbitrary
Measurement Point	TP804 (Pin ⑭ of CN801)
Measuring Instrument	Oscilloscope and frequency counter
Specified Value	Frequency: 8 ± 0.5 MHz Voltage: 7.0 ± 1.0 Vp-p

Checking method:

1) Insert a MP type cassette tape and then select the recording mode.
2) Confirm that the oscillation frequency is 8 ± 0.5 MHz and the oscillation voltage is 7.0 ± 1.0 Vp-p.

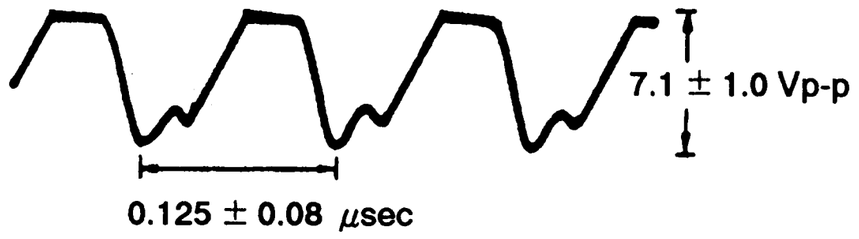

Fig. 9-13.

9-5-3. Crystal Oscillator f0 Checking (VI-66 Board)

Mode	Playback
Signal	Alignment tape: For operation check
Measurement Point	Pin ⑭ of IC602
Measuring Instrument	Frequency counter
Adjusting Element	CV601
Specified Value	3579545 ± 30 Hz

Note: Connect the frequency counter through a buffer having high impedance (approx. 10MΩ) and low capacitance (less than 10 pF).

Checking method:

1) Adjust CV601 to 3579545 ± 30 Hz.

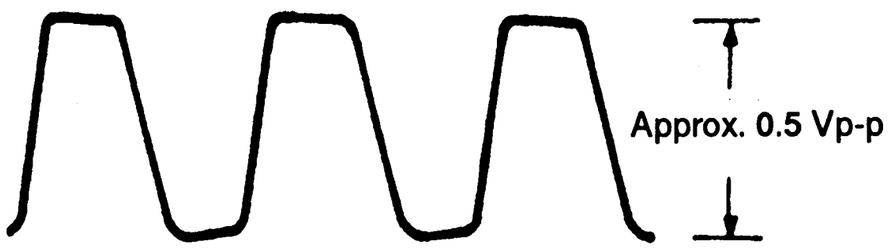

(3579545 ± 30 Hz)

Fig. 9-14.

9-5-4. Y/C Separation Adjustment (HD-8/VI-66 Board)

Mode	E-E
Signal	Color bar (VIDEO)
Measurement Point	Pin ㉖ of HD-8 board
Measuring Instrument	Oscilloscope
Adjusting Element	RV202 on HD-8 board LV601 on VI-66 board
Specified Value	Minimum residual chroma component

Adjusting method:

1) Adjust RV202 (HD-8 board) and LV601 (VI-66 board) alternately so that the residual chroma component becomes minimum.

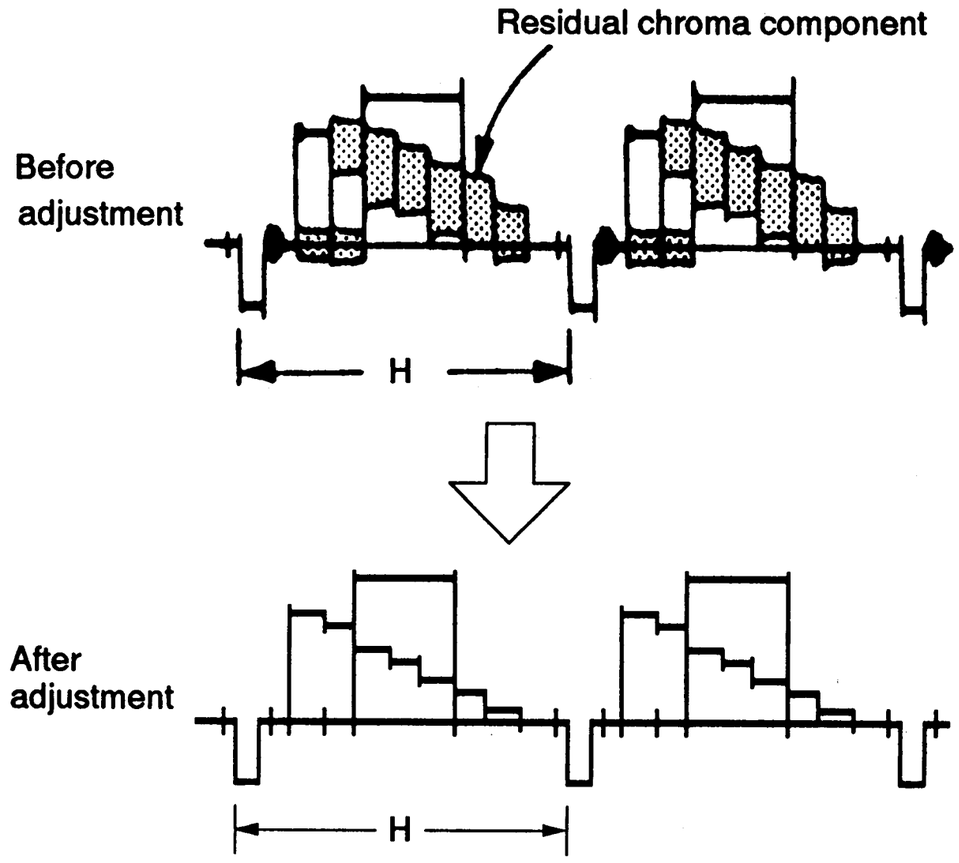

Fig. 9-15.

9-5-5. Y Comb Filter Adjustment (HD-8/VI-66 Board)

Mode	E-E
Signal	Color bar (S VIDEO)
Measurement Point	Pin ⑨ of HD-8 board
Measuring Instrument	Oscilloscope
Adjusting Element	RV201 on HD-8 board
Specified Value	Minimum amplitude between white (100%) and sync chip

Connections:

1) Connect a 22 kΩ resister across Pin ⑨ of HD-8 board and a 10:1 probe in series.

Adjusting method:

1) Adjust RV201 so that the amplitude between white (100%) and the sync chip becomes minimum.

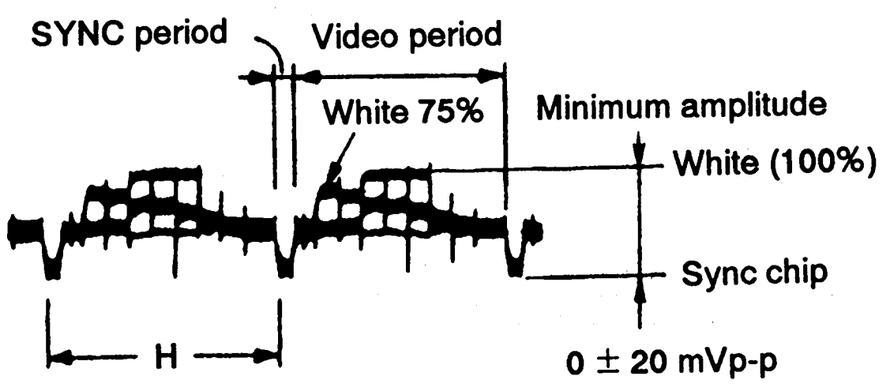

Fig. 9-16.

9-5-6. SYNC AGC and Loop Gain Adjustment

1. SYNC AGC adjustment (VI-66 board)

Mode	E-E
Signal	Color bar (S VIDEO)
Measurement Point	Pin ㊲ of IC410
Measuring Instrument	Oscilloscope
Adjusting Element	RV409
Specified Value	0.50 ± 0.01 Vp-p

Adjusting method:

1) Adjust RV409 to 0.50 ± 0.01 Vp-p.

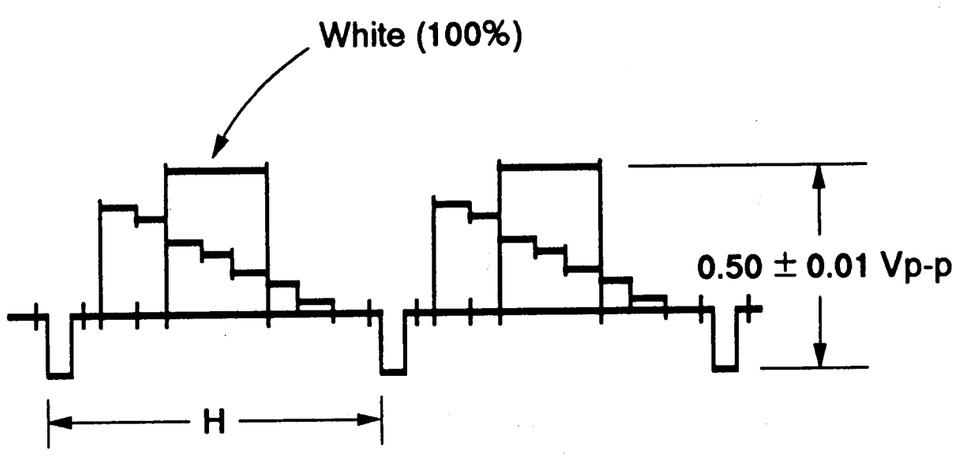

Fig. 9-17.

2. Loop gain adjustment (VI-66 board)

Mode	E-E
Signal	Color bar (S VIDEO)
Measurement Point	Pin ㊴ of IC410 (Pin ㉚ of HD-8 board)
Measuring Instrument	Oscilloscope
Adjusting Element	RV401
Specified Value	0.50 ± 0.02 Vp-p

Adjusting method:

1) Adjust RV410 to 0.50 ± 0.02 Vp-p.

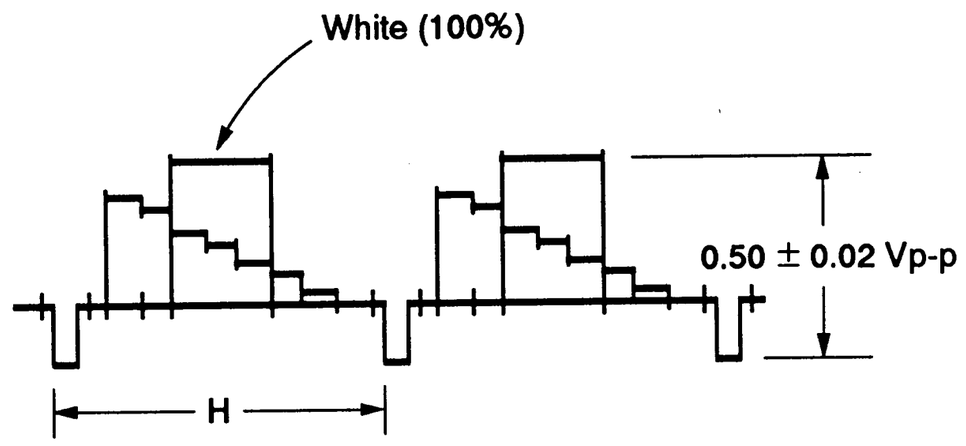

Fig. 9-18.

9-5-7. VIDEO OUT Level Adjustment (VI-66 BOard)

Mode	E-E
Signal	Color bar (S VIDEO)
Measurement Point	Pin ② (DI IN Y) of CN406
Measuring Instrument	Oscilloscope
Adjusting Element	RV410
Specified Value	1.00 ± 0.025 Vp-p

Adjusting method:

1) Adjust RV410 to 1.00 ± 0.025 Vp-p.

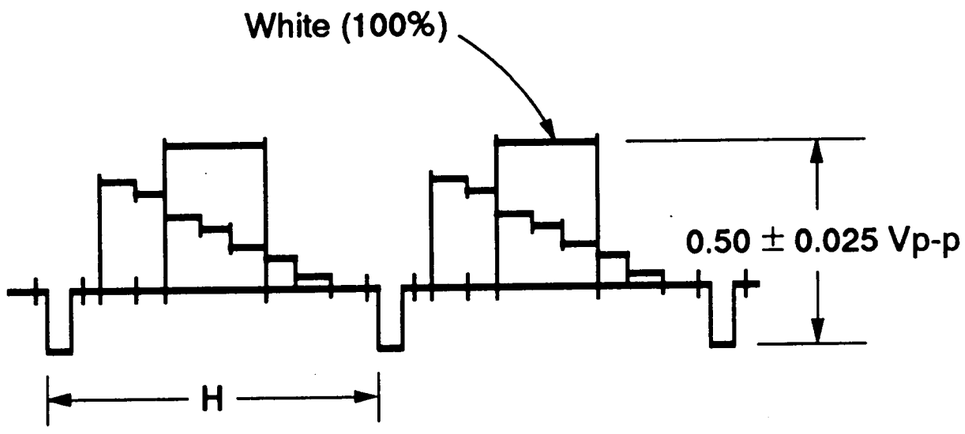

Fig. 9-19.

9-5-8. PB Emphasis Adjustment (VI-66 Board)

Mode	Playback
Signal	Alignment tape for operation check (WR5-5NSP or WR5-4NSP) Color bar section
Measurement Point	Pin ② (DI IN Y) of CN406
Measuring Instrument	Oscilloscope
Adjusting Element	RV408
Specified Value	Flat level: pedestal, sync chip and each luminance levels

Note: Make sure that EDIT switch (S771 on DK-3 board) is off.

Adjusting method:

1) Adjust RV408 to make flat the pedestal level, sync chip level and each luminance level.

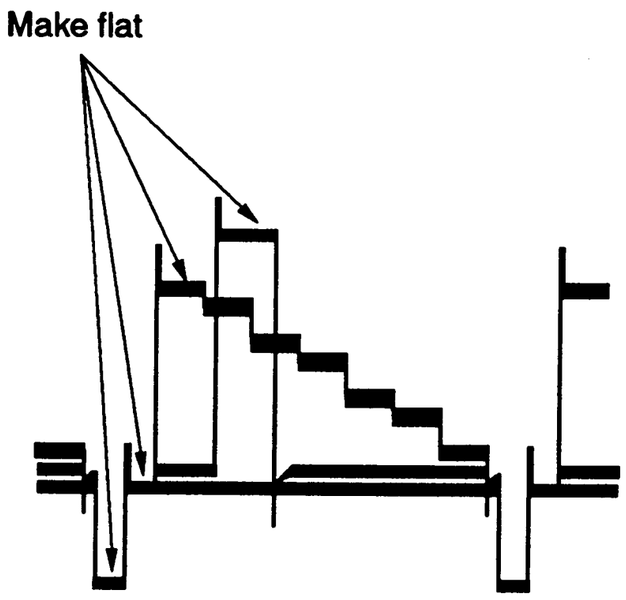

Fig. 9-20.

9-5-9. L Mode PB Y Level Adjustment (VI-66 Board)

Mode	Playback
Signal	Alignment tape: for operation check (WR5-5NSP or WR5-4NSP) Color bar section
Measurement Point	Pin ② (DI IN Y) of CN406
Measuring Instrument	Oscilloscope
Adjusting Element	RV416
Specified Value	1.02 ± 0.025 Vp-p

Note: Make sure that EDIT switch (S771 on DK-3 board) is off.

Adjusting method:

1) Adjust RV416 to 1.02 ± 0.025 Vp-p.
2) Perform "E Mode PB Y Level Adjustment".

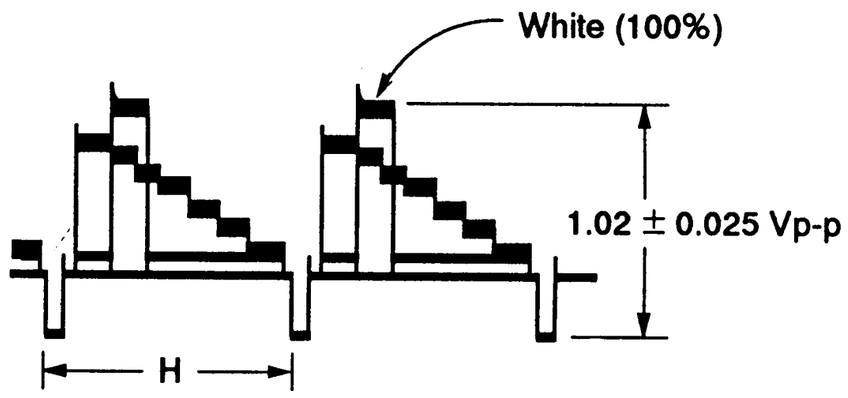

Fig. 9-21.

9-5-10. E Mode PB Y Level Adjustment (VI-66 Board)

Mode	Playback
Signal	Alignment tape: for operation check (WR5-8NSE) Color bar section
Measurement Point	Pin ② (DI IN Y) of CN406
Measuring Instrument	Oscilloscope
Adjusting Element	RV417
Specified Value	1.02 ± 0.025 Vp-p

Note: 1) Make sure that EDIT switch (S771 on DK-3 board) is off.
2) Confirm that "L Mode PB Y Level Adjustment" is completed.

Adjusting method:

1) Adjust RV417 to 1.02 ± 0.025 Vp-p.

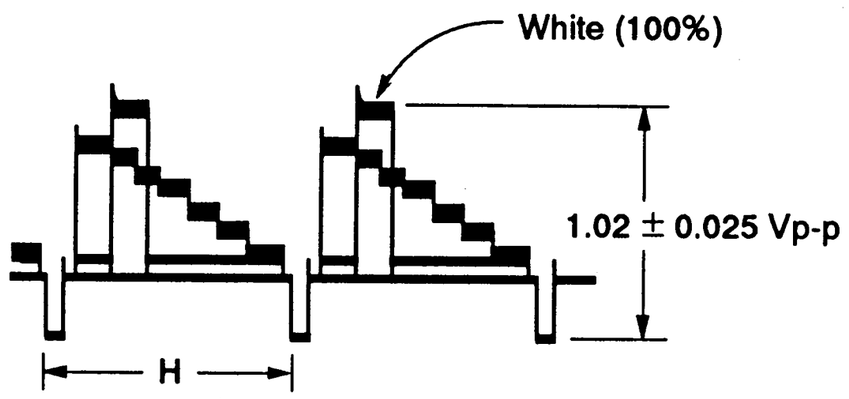

Fig. 9-22.

9-5-11. L Mode Y FM Carrier Frequency and Y FM Deviation Adjustment

Note: After this adjustment is completed, be sure to perform "E Mode Y FM Carrier Frequency and Y FM Deviation Adjustment".

1. L mode Y FM carrier frequency adjustment (VI-66 board)

Mode	E-E
Signal	No signal
Measurement Point	Pin ⑭ (REC Y RF) of IC409
Measuring Instrument	Frequency counter
Adjusting Element	RV406
Specified Value	4.38 ± 0.05 MHz

Adjusting method:

1) Insert a MP type cassette tape.
2) Adjust RV406 to 4.38 ± 0.05 MHz.
3) Be sure to perform "L Mode Y FM Deviation Adjustment".

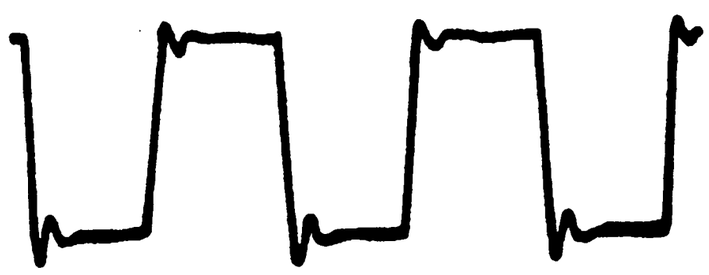

4.38 ± 0.05 MHz

Fig. 9-23.

2. L mode Y FM deviation adjustment (VI-66 board)

Mode	Recording and playback
Signal	Color bar (S VIDEO)
Measurement Point	Pin ② (DI IN Y) of CN406
Measuring Instrument	Oscilloscope
Adjusting Element	RV405
Specified Value	Playback level: 1.02 ± 0.05 Vp-p

Note: 1) Confirm that "VIDEO OUT Level Adjustment", "PB Y Level Adjustment" and "L Mode Y FM Carrier Frequency Adjustment" are completed.
2) Make sure that EDIT switch (S771 on DK-3 board) is off.

Adjusting method:

1) Insert a MP type cassette tape.
2) Record the color bar signal.
3) Play back the recorded signal.
4) Check the playback output level.
   Specified value: 1.00 ± 0.05 Vp-p
5) If the specified value is not satisfied, rotate RV405 as below and then repeat steps 1) through 3).

	RV405 rotating direction
More than spec.	Counterclockwise (↺)
Less than spec.	Clockwise (↻)

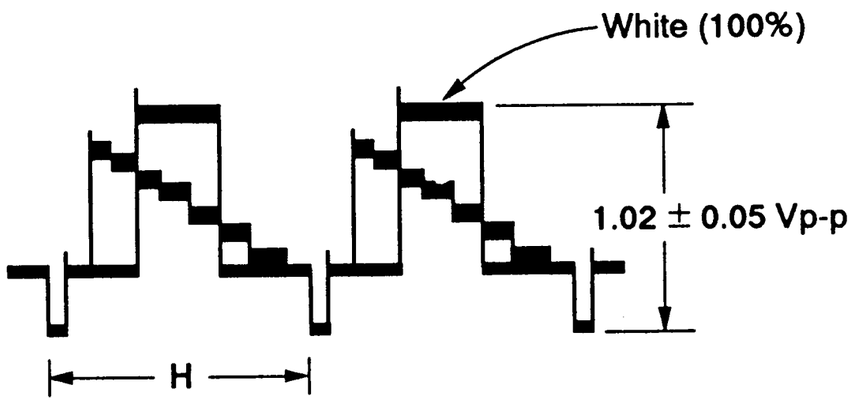

Fig. 9-24.

9-5-12. E Mode Y FM Carrier and Y FM Deviation Adjustment

Note: 1) Confirm that "L Mode Y FM Carrier Frequency and Y FM Deviation Adjustment" is completed.
2) Before adjustment, check below:
1. Make sure that Hi8 switch (E mode/L mode select switch: S770 on DK-3 board) is set to AUTO position (E mode side).

1. E mode Y FM carrier frequency adjustment (VI-66 board)

Mode	E-E
Signal	No signal
Measurement Point	Pin ⑭ (REC Y RF) of IC409
Measuring Instrument	Frequency counter
Adjusting Element	RV407
Specified Value	5.99 ± 0.05 MHz

Adjusting method:
1) Insert a ME type cassette tape.
2) Adjust RV407 to 5.99 ± 0.05 MHz.
3) Be sure to perform "E Mode Y FM Deviation Adjustment".

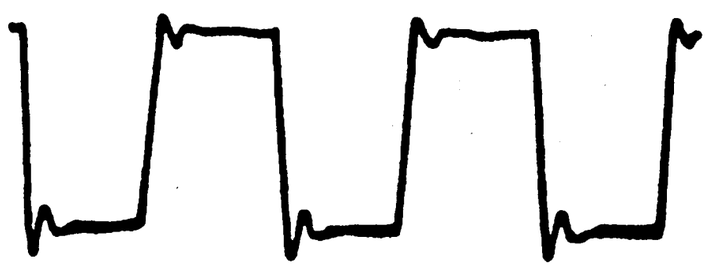

5.99 ± 0.05 MHz

Fig. 9-25.

2. E mode Y FM deviation adjustment (VI-66 board)

Mode	Recording and playback
Signal	Color bar (S VIDEO)
Measurement Point	Pin ② (DI IN Y) of CN406
Measuring Instrument	Oscilloscope
Adjusting Element	RV404
Specified Value	Playback level: 1.02 ± 0.05 Vp-p

Note: 1) Confirm that "VIDEO OUT Level Adjustment", "PB Y Level Adjustment" and "E Mode Y FM Carrier Frequency Adjustment".
2) Make sure that EDIT switch (S771 on DK-3 board) is off.

Adjusting method:
1) Insert a ME type cassette tape.
2) Record the color bar signal.
3) Play back the recorded signal
4) Check the playback output level.
Specified value: 1.00 ± 0.05 Vp-p
5) If the specified value is not satisfied, rotate RV404 as below and then repeat steps 1) through 3).

	RV404 rotating direction
More than spec.	Counterclockwise (↺)
Less than spec.	Clockwise (↻)

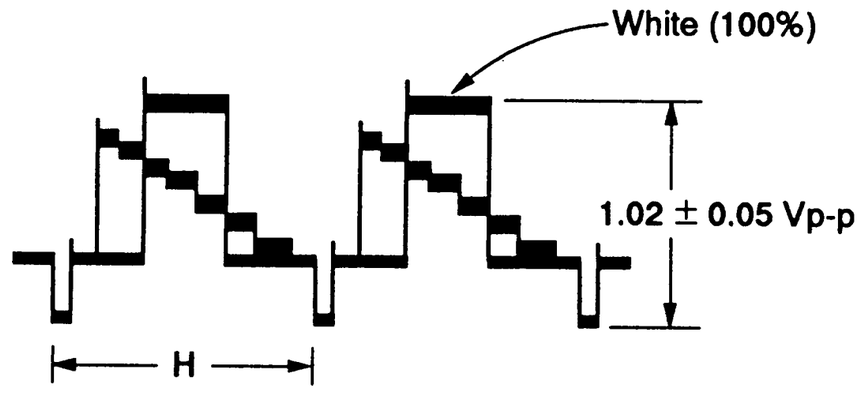

Fig.9-26.

9-5-13. 378 fH VCO Adjustment (VI-66 Board)

Mode	E-E
Signal	Color bar
Measurement Point	Pin ㉖ of IC602
Measuring Instrument	Digital voltmeter
Adjusting Element	RV602
Specified Value	3.0 ± 0.4 Vdc

Adjusting method:
1) Adjust RV602 to 3.0 ± 0.4 Vdc.

9-5-14. Chroma Emphasis Adjustment (VI-66 Board)

Mode	E-E
Signal	Color bar (S VIDEO)
Measurement Point	R612 terminal (open side) (See Fig. 9-28.)
Measuring Instrument	Oscilloscope
Adjusting Element	FL603
Specified Value	Minimum chroma signal f0 component

Connections:

1) Connect as shown below and input 2.5 Vdc to Pin ㊼ (ACC ADJ) of IC602.

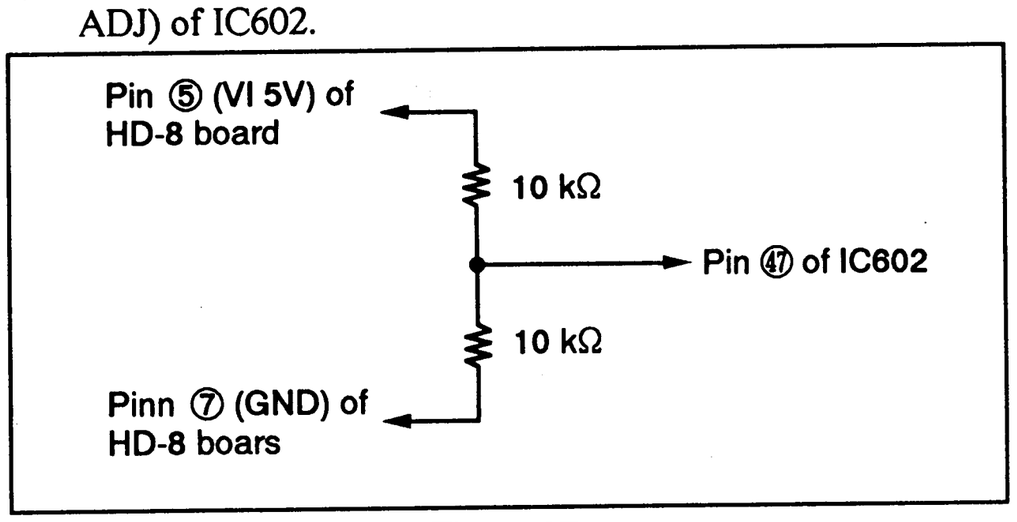

Fig. 9-27.

Adjusting method:

1) Adjust FL603 so that amplitude of the flat section of the chroma signal becomes minimum.

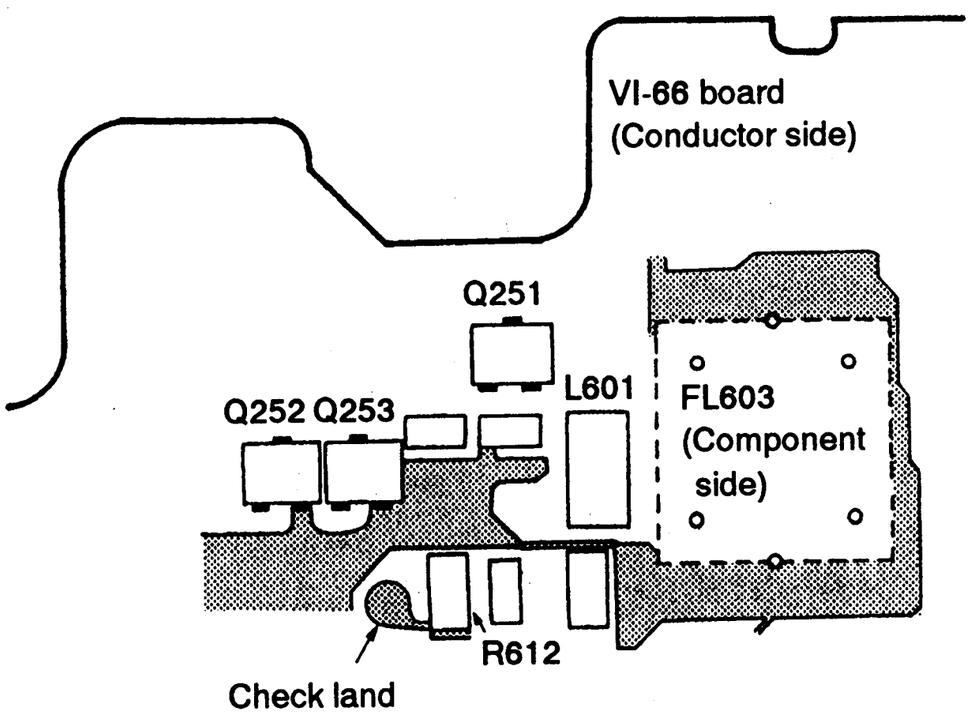

Fig. 9-28.

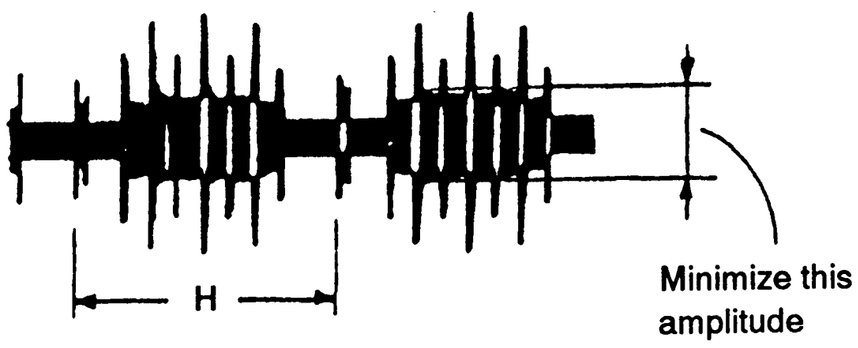

Fig. 9-29.

9-5-15. Carrier Balance Adjustment (VI-66 Board)

Mode	E-E
Signal	Color bar
Measurement Point	Pin ㊵ of IC602
Measuring Instrument	Oscilloscope
Adjusting Element	RV601
Specified Value	Minimum 4.32 MHz component

Adjusting method:

1) Adjust RV601 to minimize the 4.32 MHz component.

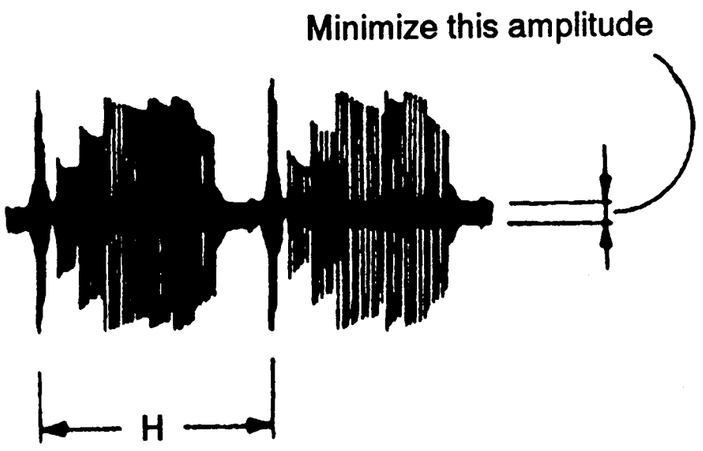

Fig. 9-30.

9-5-16. Recording Current Adjustment

Note: Perform adjustment in the E mode with using a ME type tape. Check the following two points before adjustment:

1. Make sure that Hi8 switch (E mode/L mode select switch: S770 on DK-3 board) is set to AUTO position (E mode side).
2. When performing adjustment other than "REC PCM recording current adjustment", disconnect CN303 on the PC-35 board for prevention of the effect to PCM audio system.

1. REC Y recording current adjustment (MR-19 board)

Mode	Recording
Signal	No signal
Measurement Point	TP802 (Pin ⑳ of HR-3 board: CH1 CHECK)
Measuring Instrument	Oscilloscope
Adjusting Element	RV806
Specified Value	150 ± 10 mVp-p

Note: After this adjustment is completed, be sure to perform "REC C", "REC AFM" and "REC ATF" recording current adjustments.

Adjusting method:

1) Insert a ME type cassette tape and select the recording mode.
2) Adjust RV806 to 150 ± 10 mVp-p.

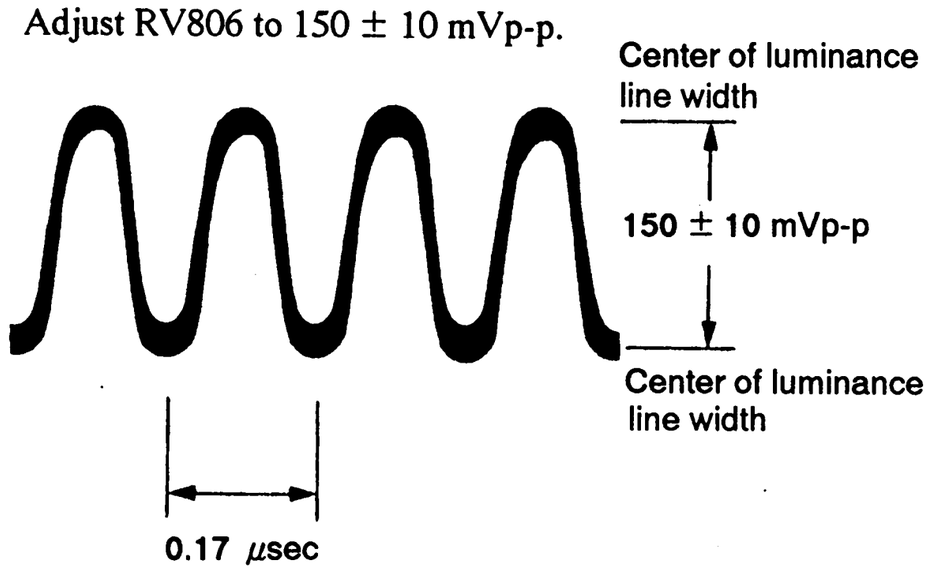

Fig. 9-31.

2. REC C recording current adjustment (MR-19 board)

Mode	Recording
Signal	Color bar (S VIDEO)
Measurement Point	TP802 (Pin ⑳ of HR-3 board: CH1 CHECK)
Measuring Instrument	Oscilloscope
Adjusting Element	RV805
Specified Value	45 ± 5 mVp-p

Note: After this adjustment is completed, be sure to perform "REC AFM" and "REC ATF" recording current adjustments.

Connections:

1) Connect following three sections with a jumper wire.
   - Pin ⑨ (REC Y RF) of CN804 on the MR-19 board and Pin ⑧ (REG 5V)
   - Q312 emitter (REC ATF) on the SS-95 board and GND
   - Pin ① (REC AFM) of CN701 on the AS-22 board and Pin ⑤ (AFM 5V) of CN702.

Adjusting method:

1) Insert a ME type cassette tape and select the recording mode.
2) Adjust RV805 to 45 ± 5 mVp-p.

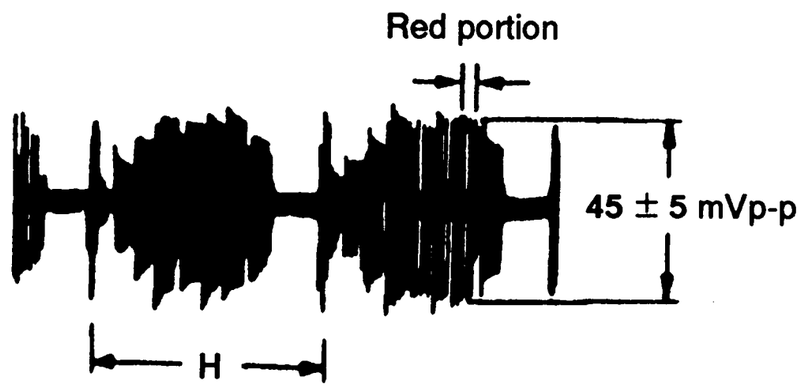

Fig. 9-32.

3. REC AFM recording current adjustment (AS-22 board)

Mode	Recording
Signal	No signal
Measurement Point	TP802 on MR-19 board (Pin ⑳ of HR-3 board: CH1 CHECK)
Measuring Instrument	Oscilloscope
Adjusting Element	RV713
Specified Value	10.5 ± 1.5 mVp-p

Note: If the signal level at TP802 is not enough to read, connect directly to a 100Ω resister without a 10:1 probe, as shown below.

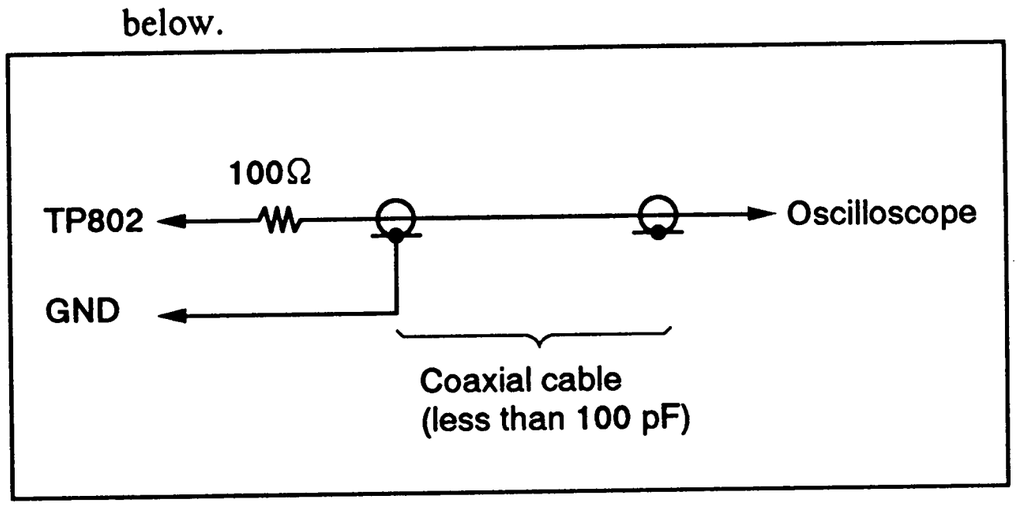

Fig. 9-33.

Connections:

1) Connect following three sections with a jumper wire.
- Pin ⑨ (REC Y RF) of CN804 on the MR-19 board and Pin ⑧ (REG 5V)
- Q312 emitter (REC ATF) on the SS-95 board and GND
- Pin ⑩ (1.7 MHz CARRIER $\overline{ON}$/OFF) of CN702 on the AS-22 board and Pin ⑤ (AFM 5V)

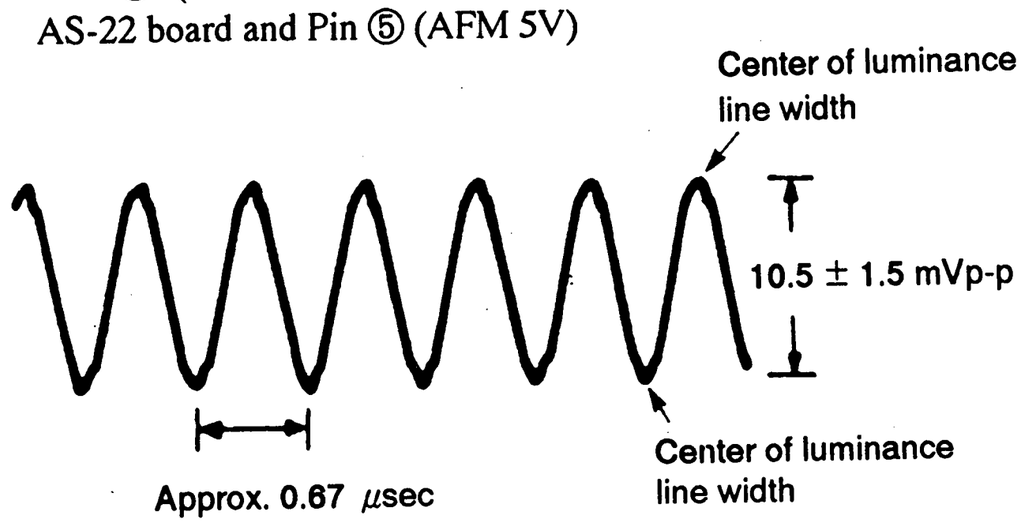

Fig. 9-34.

4. REC ATF recording current adjustment (SS-95 board)

Mode	Recording
Signal	No signal
Measurement Point	TP802 on the MR-19 board (Pin ⑳ of HR-3 board: CH1 CHECK)
Measuring Instrument	Oscilloscope
Adjusting Element	RV310
Specified Value	8.5 ± 1.5 mVp-p

Note: If the signal level at TP802 is not enough to read, connect directly to a 100Ω resister without a 10:1 probe, as shown below.

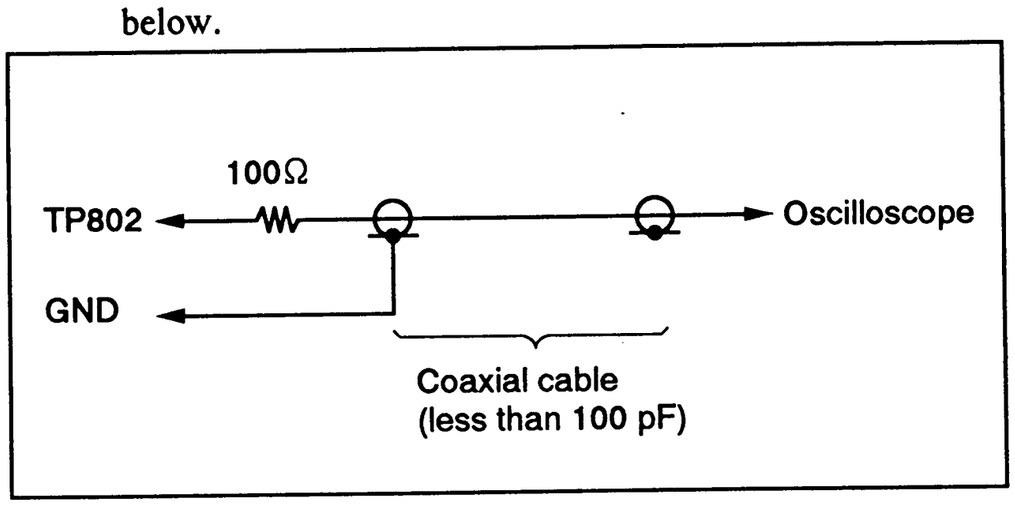

Fig. 9-35.

Connections:

1) Connect following two sections with a jumper wire.
- Pin ⑨ (REC Y RF) of CN804 on the MR-19 board and Pin ⑧ (REG 5V)
- Pin ① (REC AFM) of CN701 on the AS-22 board and Pin ⑤ of CN702 (AFM 5V)

Adjusting method:

1) Insert a ME type cassette tape and select the recording mode.
2) Adjust RV310 to 8.5 ± 1.5 Vp-p.

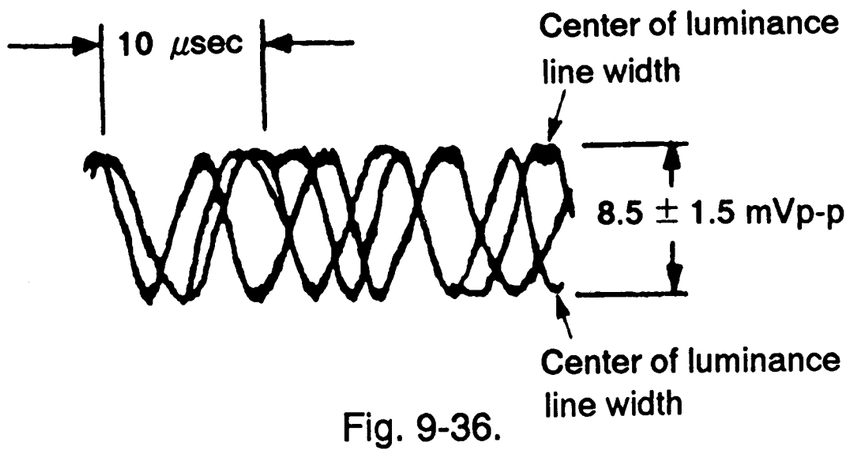

Fig. 9-36.

5. REC PCM recording current adjustment (PC-35 board)

Mode	Recording
Signal	No signal
Measurement Point	TP802 on MR-19 board (Pin ⑳ of HR-3 board: CH1 CHECK)
Measuring Instrument	Oscilloscope
Adjusting Element	RV307
Specified Value	215 ± 15 mVp-p

Note: Confirm that CN303 of the PC-35 board is connected.

Connections:

1) Connect TP805 (Base of Q837) and TP806 (Collector of Q837) on the MR-19 board with a jumper wire.

Adjusting method:

1) Insert a ME type cassette tape and select the recording mode.
2) Adjust RV307 to 215 ± 15 mVp-p.

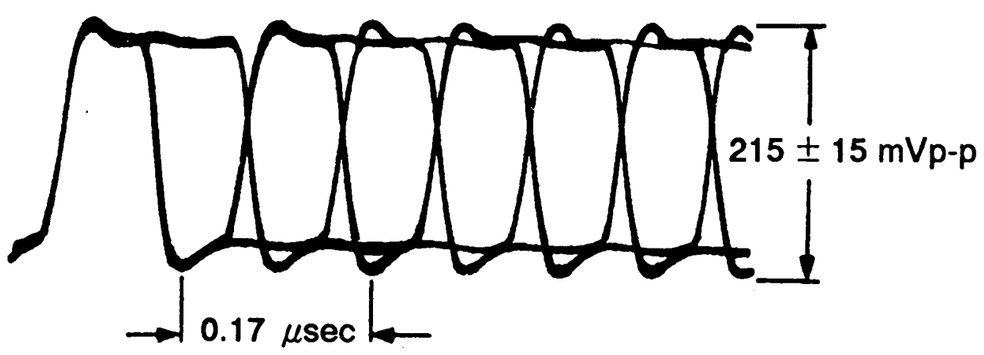

Fig. 9-37.

9-5-17. VIDEO OUT Level Adjustment (PJ-22 Board)

Mode	E-E
Signal	Color bar (VIDEO)
Measurement Point	J904 (VIDEO OUT)
Measuring Instrument	Oscilloscope
Adjusting Element	RV901
Specified Value	1.00 ± 0.025 Vp-p

Note: J904 (VIDEO OUT) must be terminated at 75Ω .

Adjusting method:

1) Adjust RV901 to 1.00 ± 0.025 Vp-p.

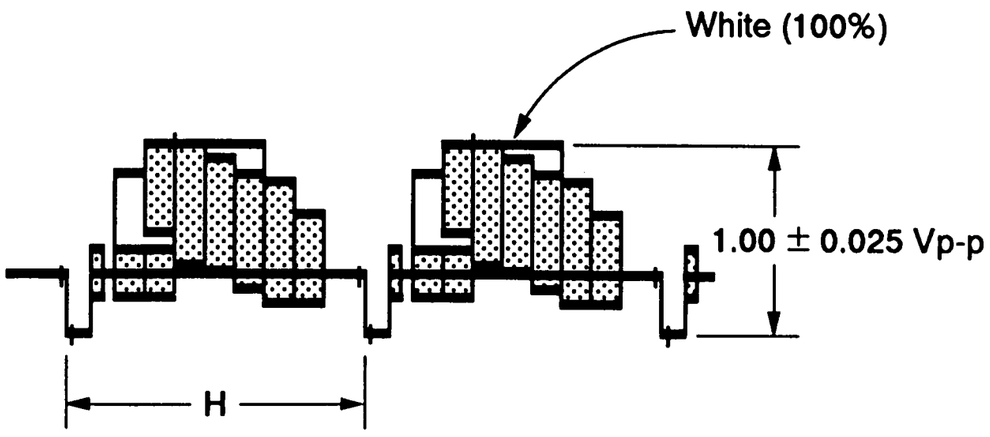

Fig. 9-38.

9-5-18. Y OUT Level Adjustment (PJ-22 Board)

Mode	E-E
Signal	Color bar (S VIDEO)
Measurement Point	Y signal terminal (Pin ③) of J903 (S VIDEO OUT).
Measuring Instrument	Oscilloscope
Adjusting Element	RV902
Specified Value	1.00 ± 0.025 Vp-p

Connections:

1) Terminate the Y signal terminal (Pin ③) of J903 at 75Ω .
2) Connect Pin ⑤ (S POWER SAVE) and GND with a jumper wire.

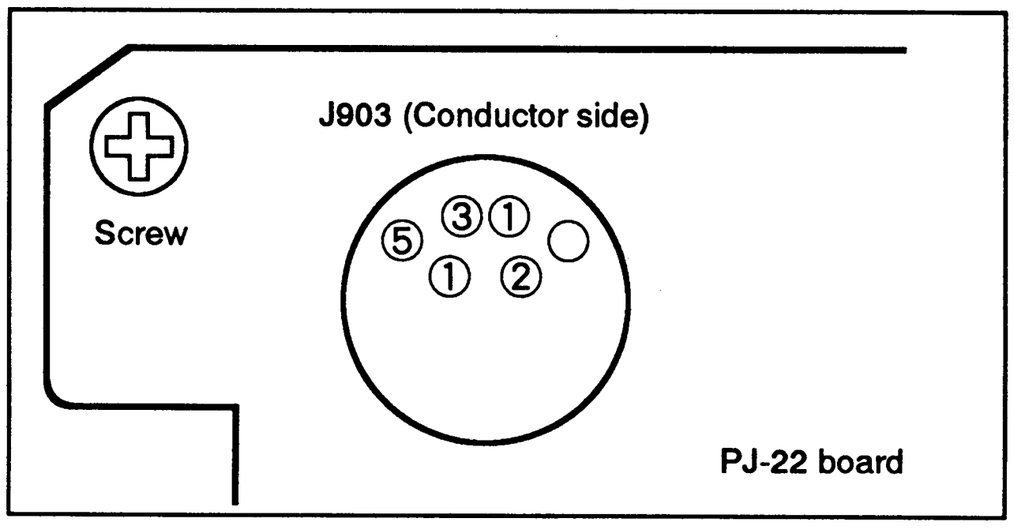

Fig. 9-39.

Adjusting method:

1) Adjust RV902 to 1.00 ± 0.025 Vp-p.

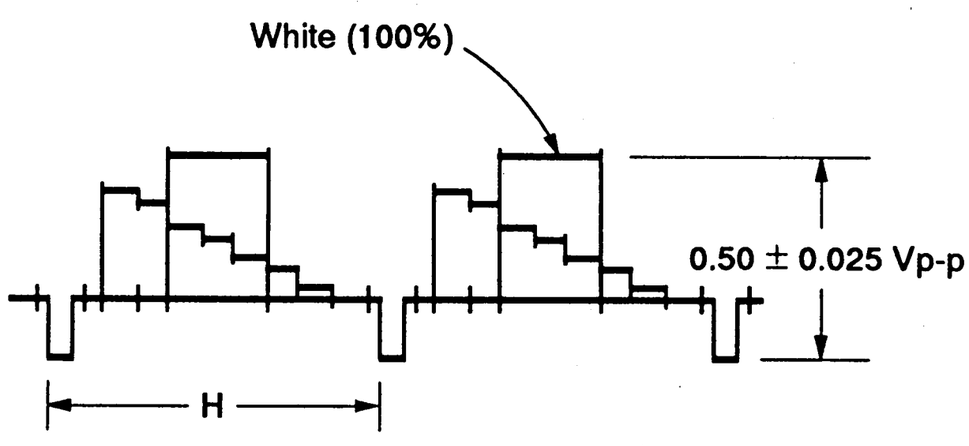

Fig. 9-40.

9-5-19. C OUT Level Adjustment (PJ-22 Board)

Mode	E-E
Signal	Color bar (S VIDEO)
Measurement Point	Chroma signal terminal (Pin ④) of J903 (S VIDEO OUT)
Measuring Instrument	Oscilloscope
Adjusting Element	RV903
Specified Value	0.286 ± 0.007 Vp-p

Connections:

1) Terminate the chroma signal terminal (Pin ④) of J903 at 75Ω .
2) Connect Pin ⑤ (S POWER SAVE) and GND with a jumper wire.

Adjusting method:

1) Adjust the burst level with RV903 to 0.286 ± 0.007 Vp-p.

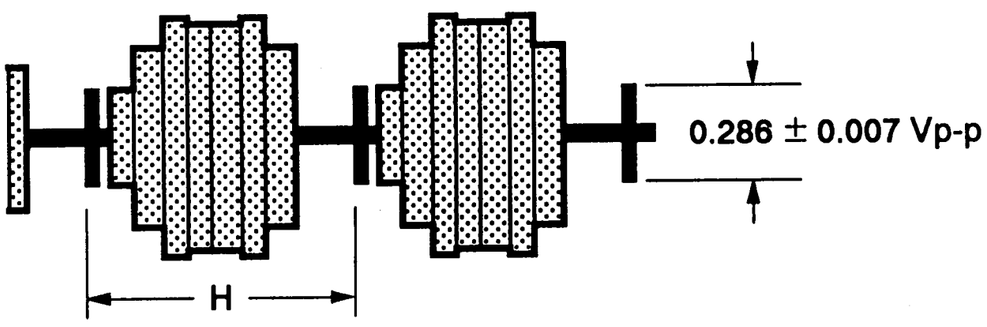

Fig. 9-41.

9-5-20. Character Generator f0 Adjustment (VI-66 Board)

Mode	E-E
Signal	No signal
Measurement Point	Pin ⑳ of IC407
Measuring Instrument	Frequency counter
Adjusting Element	CV401
Specified Value	15.834 ± 100 Hz

Adjusting method:

1) Adjust CV401 to 15.834 ± 100 Hz.

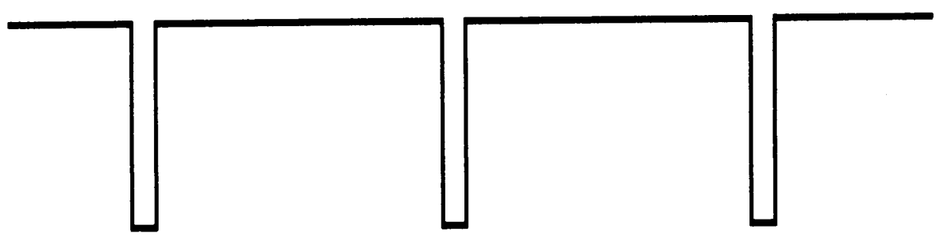

Fig. 9-42.

9-5-21. DDS Character Position Adjustment (VI-66 Board)

Mode	Playback (data screen: ON)
Signal	Alignment tape for operation check Color bar section
Measurement Point	Monitor TV screen
Measuring Instrument	Monitor TV
Adjusting Element	CV402
Specified Value	Left inner contour of the number at the right side of the count indication is lined up with the border line between the red and blue color bars.

Adjusting method:

1) Turn on the data screen by DATA SCREEN button (S741 on VK-2 board).
2) Adjust CV401 until the left inner contour of the number at the right side of the count indication is lined up with the border line between the red and blue color bars.

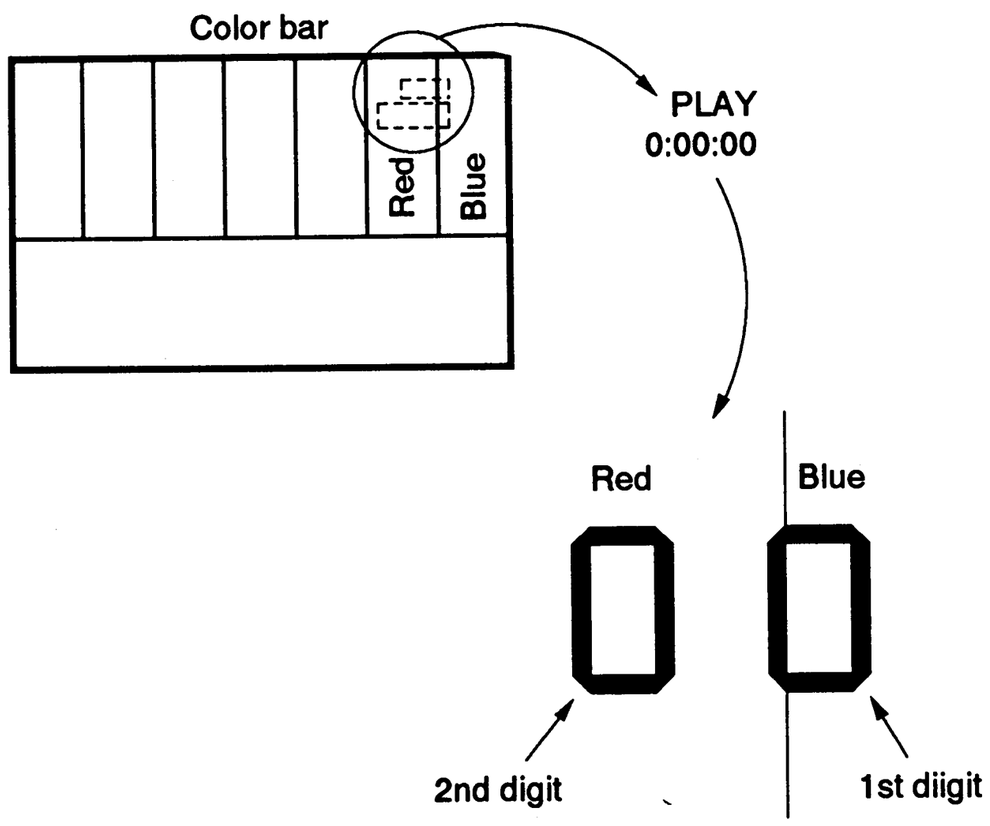

Fig. 9-43.

9-6. DIGITAL PICTURE SYSTEM ADJUSTMENT

Set the switches to the following positions.

- POWER (CAMERA/OFF/VTR) switch (S743 on VK-2 board).....CAMERA
- +VTR switch (S745 on VK-2 board).....ON
- DIGITAL EFECT switch (S761 on DK-3 board).....ON
- EFECT LEVEL selector (S215 on FD-13 board).....3

[Input signals]

Remove CN604 on the DI-21 board and input the Y signal from the pattern generator. At this time, connect the oscilloscope to Pin ③ of CN604, and confirm that the Y signal level is 1 Vp-p and that there are no chroma and burst signals.

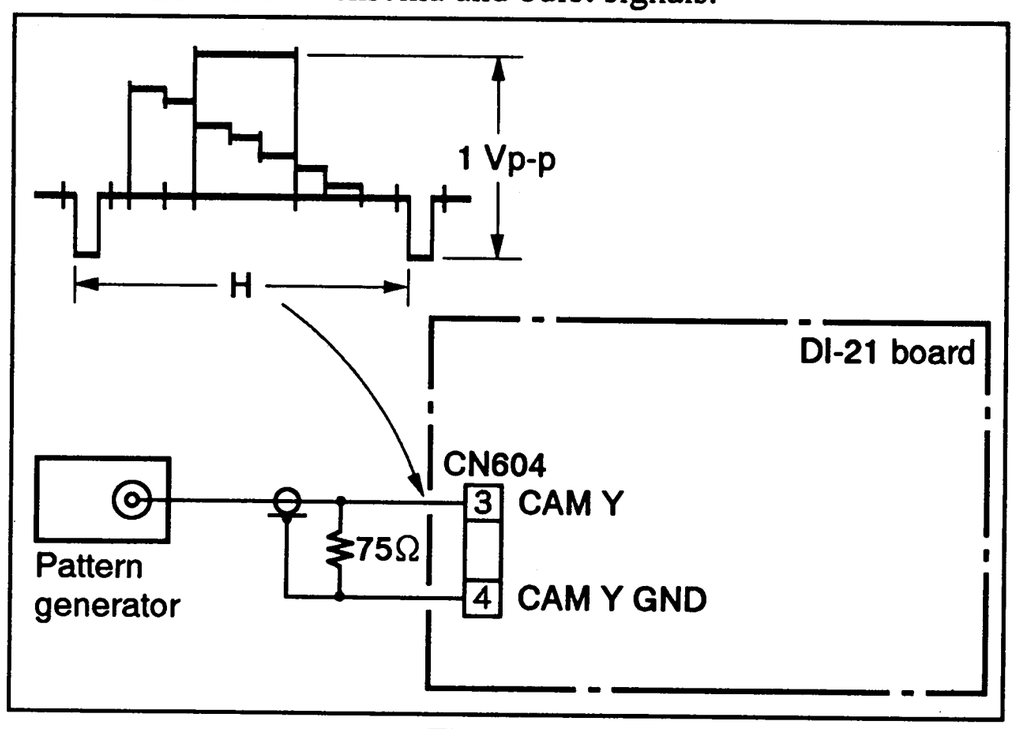

Fig. 9-44.

9-6-1. AFC Adjustment (DI-21 Board)

Mode	Playback
Signal	Arbitrary
Measurement Point	TP603 (Pin ⑰ of IC704: YWCK)
Measuring Instrument	Frequency counter
Adjusting Element	VC701
Specified Value	14.318180 MHz ± 50 kHz

Connections:

1) Connect Pin ⑤ (VIDEO IN) of IC704 and Pin ⑬ (DM 4.4V) of IC708 with a jumper wire.
2) Connect Pin ⑩ (PWM) and Pin ⑪ (PEO) of IC704 with a jumper wire.

Adjusting method:

1) Adjust VC701 so that the Y signal write clock (YWCK) free run frequency becomes 14.318180 MHz ± 50 kHz.

9-6-2. APC Adjustment (DI-21 Board)

Mode	Playback
Signal	Alignment tape for operation check (WR5-5NSP or WR5-4NSP) Color bar section
Measurement Point	TP606 (Pin ㊻ of IC701: CWCK)
Measuring Instrument	Frequency counter
Adjusting Element	RV604
Specified Value	14.318400 MHz ± 50 Hz

Connections:

1) Connect Pin ⑲ (chroma signal input) and Pin ⑳ (GND) of IC709 with a 0.01 μF capacitor.

Adjusting method:

1) Adjust RV604 so that the chroma signal write clock (CWCK) free run frequency becomes 14.3181400 MHz ± 50 Hz.

9-6-3. V-PLL Adjustment (DI-21 Board)

Mode	Playback
Signal	Arbitrary
Measurement Point	TP609 (Pin (119) of IC703: YRCK)
Measuring Instrument	Frequency counter
Adjusting Element	RV605
Specified Value	14.318180 MHz ± 200 Hz

Adjusting method:

1) Adjust RV605 so that the Y signal write clock (YRCK) frequency becomes 14.318180 ± 200 Hz.

9-6-4. D/A SYNC Level Adjustment (DI-21 Board)

Mode	Camera E-E
Signal	Color bar signal (with chroma signal and burst signal being OFF)
Measurement Point	Pin ③ of CN602
Measuring Instrument	Oscilloscope
Adjusting Element	RV603
Specified Value	A=a ± 10 mV

Adjusting method:

1) Press CLEAR (DIGITAL EFECT CLEAR) button (S765 on DK-3 board).
2) Read the through signal sync level (a).
3) Press FLASH MOTION button (S763 on DK-3 board).
4) Adjust RV603 so that the memory read-out signal sync level (A) becomes a ± 10 mV.

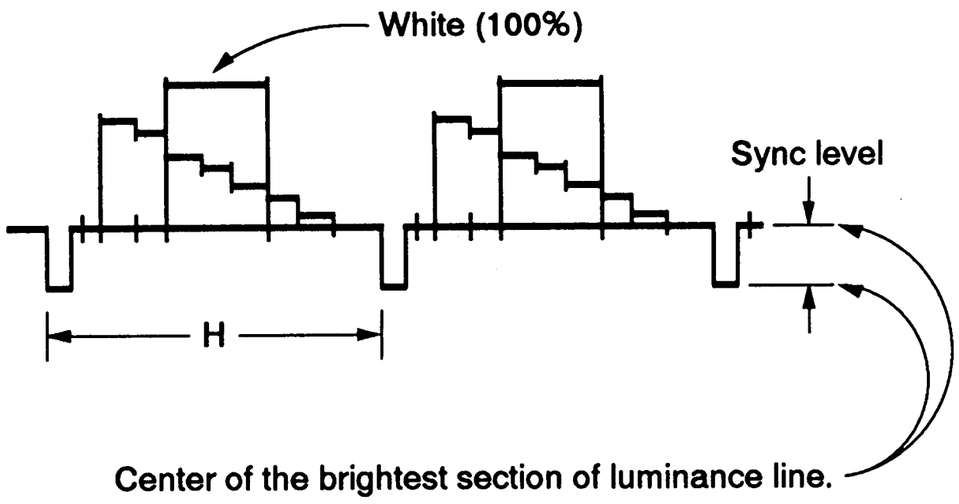

Fig. 9-45.

9-6-5. A/D White Level Adjustment (DI-21 Board)

Mode	Camera E-E
Signal	Color bar signal (with chroma and burst signals being OFF)
Measurement Point	Pin ③ of CN602
Measuring Instrument	Oscilloscope
Adjusting Element	RV602
Specified Value	B=b ± 10 mV

Adjusting method:

1) Press CLEAR (DIGITAL EFECT CLEAR) button (S765 on DK-3 board).
2) Read the through signal white level (b).
3) Press FLASH MOTION (S763 on DK-3 board) button.
4) Adjust RV602 so that the memory read-out white level (B) becomes b ± 10 mV.

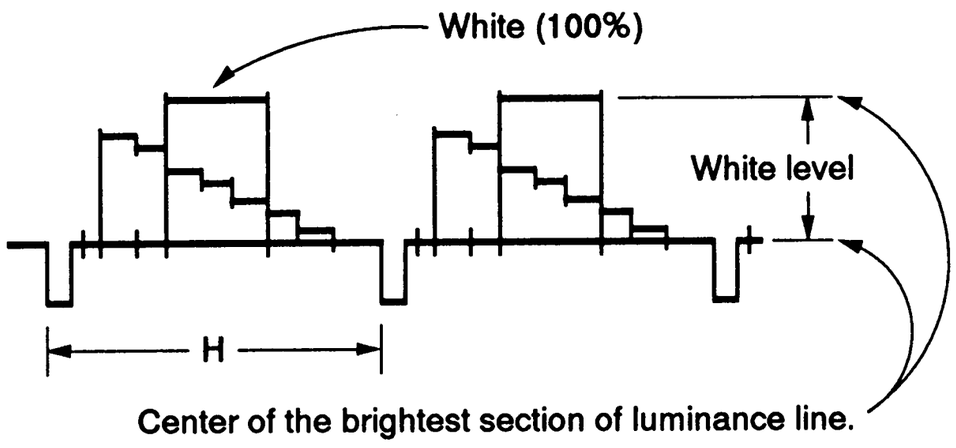

Fig. 9-46.

9-7. AUDIO SYSTEM ADJUSTMENT

- Perform adjustment with using the color bar signal as a video input signal.

[Connection of audio system measuring instruments]

In addition to the video system measuring instruments, connect the audio system measuring instruments as shown in the figure below.

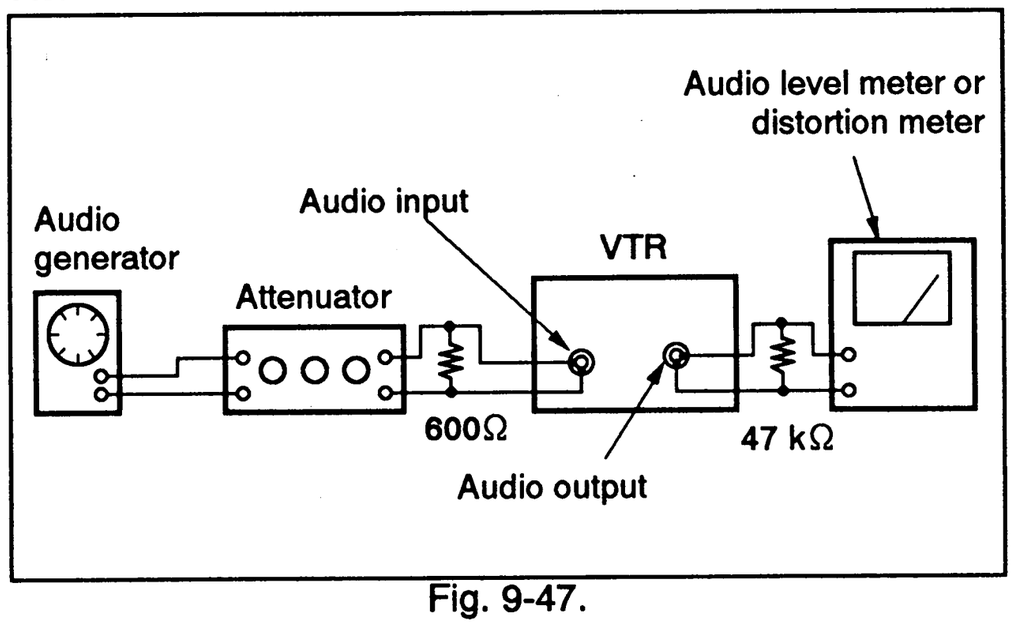

Fig. 9-47.

9-7-1. PCM Audio System Adjustment

Unless otherwise specified, the switches or controls are set to the following positions for adjustments.

- AUDIO MONITOR (DIGITAL/HIFI) switch (S902 on PJ-22 board).....DIGITAL (PCM)
- AUDIO MONITOR (STEREO/MAIN/SUB) switch (S801 on LI-12 board).....STEREO
- AGC switch (S220 on FD-13 board).....OFF
- REC LEVEL control (RV211 on FD-13 board).....Position 10
- BALANCE control (RV212 on FD-13 board).....Mechanical center

Note: In adjustments which is performed for both R and L channels, the adjusting element for R channel is shown in parentheses [ ].

[Adjustment procedure]

1) PCM master clock adjustment
2) PCM playback VCO free oscillation frequency adjustment
3) PCM playback level adjustment
4) E-E output level check
5) Level meter adjustment
6) PCM off-set adjustment
7) PCM recording level adjustment
8) Overall frequency characteristics check
9) Overall distortion check
10) Overall noise level check

1. PCM master clock adjustment (PC-35 board)

Mode	Recording
Signal	No signal
Measurement Point	Pin ㉑ (MCKO) of IC321
Measuring Instrument	Frequency counter
Adjusting Element	CV422
Specified Value	11.58 ± 0.01 MHz

Connections:

1) Desolder the slit land of Pin ㊽ (TEST 4) of IC321 to open. Then connect Pin ㊽ of IC321 and the 5V power supply (Q317 collector) with a jumper wire.
2) Connect Pins ㉖ and ㉗ of IC321 with a jumper wire.

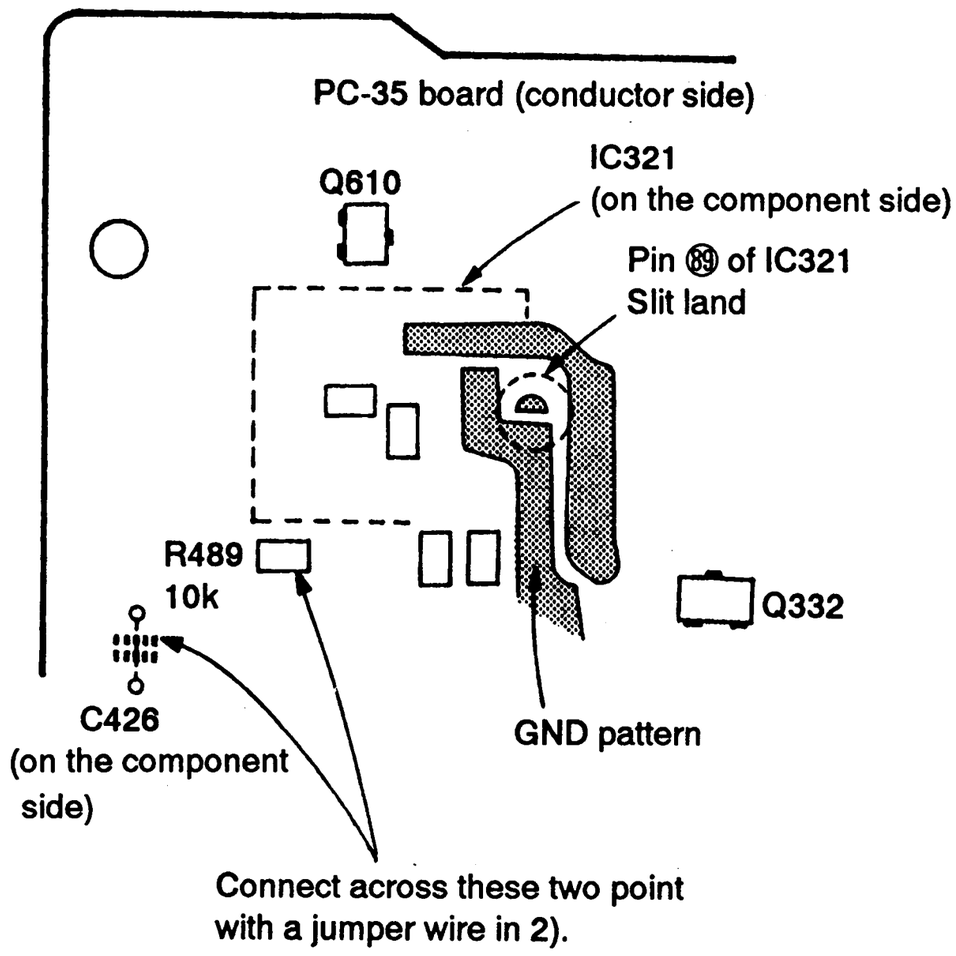

Fig. 9-48.

Adjusting method:

1) Adjust CV422 so that the clock frequency becomes 11.58 ± 0.01 MHz.

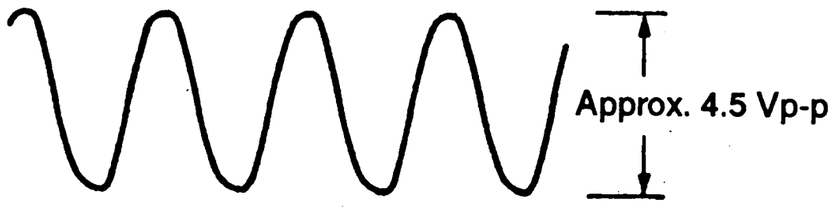

Fig. 9-49.

2. PCM playback VCO free oscillation frequency adjustment (PC-35 board)

Mode	Playback
Signal	Arbitrary
Measurement Point	Pin ⑧ of IC324
Measuring Instrument	Frequency counter
Adjusting Element	RV306
Specified Value	11.58 ± 0.02 MHz

Connections:

1) Remove CN303.
2) Connect Pin ① of IC324 and Q317 collector (5V) with a jumper wire.

Adjusting method:

1) Adjust RV306 to 11.58 ± 0.02 MHz.

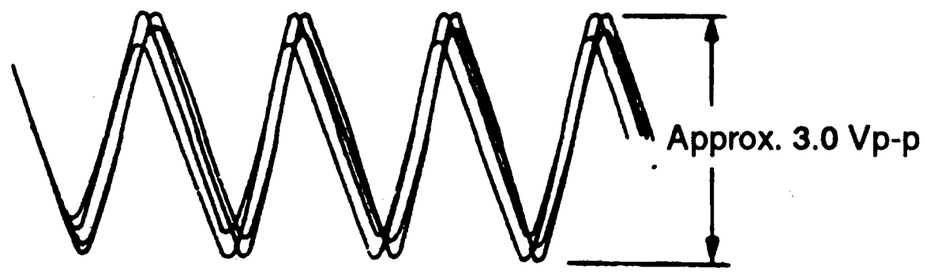

Fig. 9-50.

3. PCM playback level adjustment (PC-35 board)

Mode	Playback
Signal	Alignment tape for operation check (WR5-5NSP) Monoscope signal section
Measurement Point	AUDIO OUT terminal L [R]
Measuring Instrument	Audio level meter
Adjusting Element	RV303
Specified Value	–7.5 ± 0.2 dBs

Adjusting method:

1) Adjust RV303 to –7.5 ± 0.2 dBs.

Note: If there is a level difference between L and R channels, adjust to the central value.

4. E-E output level check

Mode	E-E
Signal	1 kHz, –7.5 dBs: AUDIO IN terminal L [R]
Measurement Point	AUDIO OUT terminal L [R]
Measuring Instrument	Audio level meter
Specified Value	–7.5 ± 2.0 dBs

Checking method:

1) Set REC LEVEL control to the mechanical center position (align green marks of REC LEVEL control and the cabinet).
2) Confirm that AUDIO OUT terminal L [R] level is –7.5 ± 2.0 dBs.

5. Level meter adjustment (PC-35 board)

Mode	E-E
Signal	400 Hz, –10 dBs: AUDIO IN terminal L [R]
Measurement Point	AUDIO OUT terminal L [R]
Measuring Instrument	Audio level meter
Adjusting Element	RV304 [RV305]
Specified Value	Level meter of the video camera recorder unit indicates –10 dBs.

Adjusting method:

1) Adjust REC LEVEL control so that the AUDIO OUT terminal L [R] signal level becomes –10 dBs.
2) Adjust RV304 [RV305] so that the level meter L [R] of the video camera recorder unit indicates –10 dB.

6. PCM off-set adjustment (PC-35 board)

Mode	Recording
Signal	No signal
Measurement Point	CH1: Pin ㉘ (ADDA) of IC314 CH2: Pin ㉗ (WCK) of IC314
Measuring Instrument	Oscilloscope
Adjusting Element	RV310 [RV309]
Specified Value	Upper and lower luminance line brightness is equal.

Note: Since there is a correlation between L and R channels, be sure to adjust these two channels alternately.

Adjusting method:

1) Set REC LEVEL control to minimum (0) position.
2) Adjust RV310 [RV309] so that the upper and lower luminance lines brightness become equal.

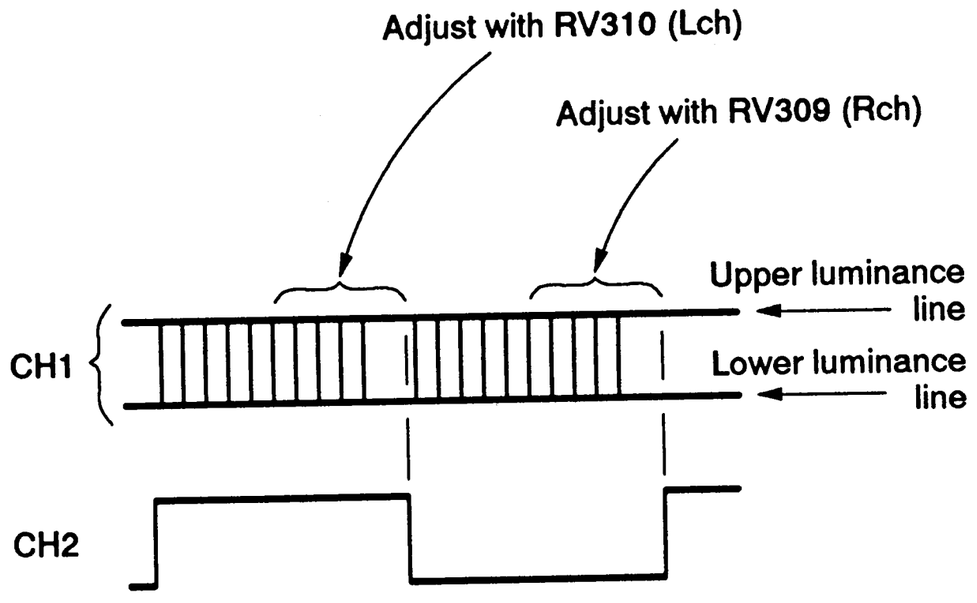

Fig. 9-51.

7. PCM Recording level adjustment (PC-35 board)

Mode	Self-recording and playback
Signal	1 kHz, –7.5 dBs: AUDIO IN terminal L [R]
Measurement Point	AUDIO OUT terminal L [R]
Measuring Instrument	Audio level meter
Adjusting Element	RV301 [RV302]
Specified Value	–7.5 ± 0.5 dBs

Note: Confirm that "PCM playback level adjustment" is completed.

Adjusting method:

1) Select the E-E mode.
2) Set the AUDIO OUT terminal L [R] output level to –7.5 dBs with REC LEVEL control.
3) Record the signal.
4) Play back the recorded section.
5) Confirm that the AUDIO OUT terminal L [R] output level is –7.5 ± 0.5 dBs.
6) If the specification is not satisfied, adjust RV301 [RV302] and then repeat steps 1) through 5).
   The signal level at Pin ⑬ [Pin ⑯] of IC314 in the recording is proportional to the output level in the playback mode*1. This adjustment can be made comparatively easy by turning the adjustment control while measuring the signal level at this point with the oscilloscope.
   *1: Since the signal will be subjected to logarithmic compressing, it is not linear proportion.

8. Overall frequency characteristics check

Mode	Self-recording and playback
Signal	Ⓐ 400 Hz, –20 dBs Ⓑ 20 Hz, –20 dBs Ⓒ 13 Hz, –20 dBs AUDIO IN terminal L [R]
Measurement Point	AUDIO OUT terminal L [R]
Measuring Instrument	Audio level meter
Specified Value	With the 400 Hz playback output level as 0 dB, the playback output level of 20 Hz is 0^{+2}_{-1} dB and that of 13 kHz is 0^{+1}_{-3} dB

Checking method:

1) Set the AUDIO OUT terminal L [R] output level to –20 dBs with REC LEVEL control.
2) Record signals Ⓐ through Ⓒ in the order.
3) Playback the recorded sections.
4) With the 400 Hz playback output level as 0 dB, confirm that the playback output level of 20 Hz is 0^{+2}_{-1} dB and that of 13 kHz is 0^{+1}_{-3} dB.

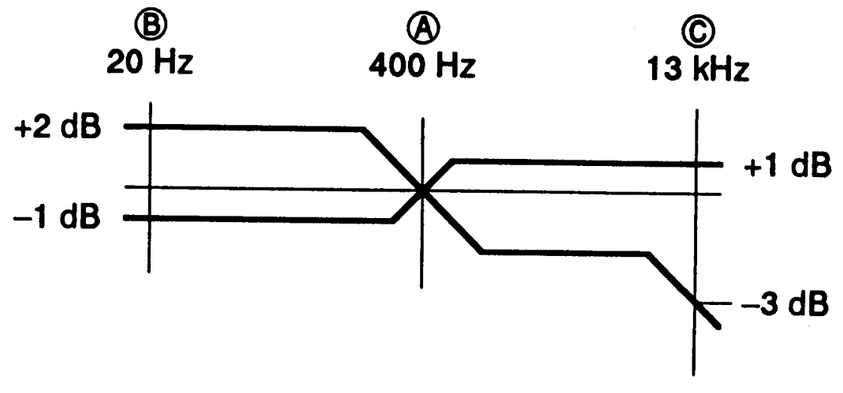

Fig. 9-52.

9. Overall distortion check

Mode	Self-recording and playback
Signal	1 kHz, –7.5 dBs: AUDIO IN terminal L [R]
Measurement Point	AUDIO OUT terminal L [R]
Measuring Instrument	Distortion meter
Specified Value	Less than 0.5%*1

Checking method:

1) Set the AUDIO OUT terminal L [R] output level to –7.5 dBs with REC LEVEL control.
2) Record the signal.
3) Playback the recorded section.
4) Confirm that the distortion is less than 0.5% *1.

*1 Value when 200 Hz to 6 kHz BPF (18 dB/OCT) is used.

10. Overall Noise Level Check

Mode	Self-recording and playback
Signal	No signal (shorting plug is inserted into AUDIO IN L and R terminals)
Measurement Point	AUDIO OUT terminal L [R]
Measuring Instrument	Audio level meter
Adjusting Element	Less than –7.85 dBs *2

Checking method:

1) Record the signal.
2) Playback the recorded section.
3) Make sure that the noise level is less than –7.85 dBs *2.

*2 Value when IHF-A hearing correction filter is used.

9-7-2. AFM Audio System Adjustment

Unless otherwise specified, the switches or controls are set to the following positions for adjustments.

- AUDIO MONITOR (DIGITAL/HIFI) switch (S902 on PJ-22 board).....HIFI (AFM)
- AUDIO MONITOR (STEREO/MAIN/SUB) switch (S801 on LI-12 board).....STEREO
- AGC switch (S220 on FD-13 board).....OFF
- REC LEVEL control (RV211 on FD-13 board).....Position 10
- BALANCE control (RV212 on FD-13 board).....Mechanical center
- NARRATION mic.....Be sure not to be used
- MONO MIC jack (J863 on MJ-5 board).....Be sure nothing to be connected.

Note: In adjustments which is performed for both R and L channels, the adjusting element for R channel is shown in parentheses [ ].

[Adjusting procedure]

1) 1.5 MHz carrier frequency adjustment
2) 1.7 MHz carrier frequency adjustment
3) Recording current ratio adjustment
4) E-E output level check
5) 1.5 MHz deviation adjustment
6) 1.7 MHz deviation adjustment
7) REC matrix L+R adjustment
8) REC matrix L–R adjustment
9) PB matrix L adjustment
10) PB matrix R adjustment
11) Overall level adjustment, separation check
12) Overall distortion check
13) Overall noise level check

1. 1.5 MHz carrier frequency adjustment (AS-22 board)

Mode	Recording
Signal	No signal
Measurement Point	Pin ⑬ of IC701
Measuring Instrument	Frequency counter
Adjusting Element	RV701
Specified Value	1.50 ± 0.01 MHz

Note: Use a 10:1 probe for connecting the frequency counter.

Connections:

1) Connect Pin ㉕ (PB/$\overline{\text{REC}}$) of IC708 and Pin ⑤ (AFM 5V) of CN702 with a jumper wire.

Adjusting method:

1) Set REC LEVEL control to minimum (0) position.
2) Adjust RV701 to 1.50 ± 0.01 MHz.
3) Reset REC LEVEL control to maximum (10) position.

2. 1.7 MHz carrier frequency adjustment (AS-22 Board)

Mode	Recording
Signal	No signal
Measurement Point	Pin ⑬ of IC702
Measuring Instrument	Frequency counter
Adjusting Element	RV703
Specified Value	1.70 ± 0.01 MHz

Note: Use a 10:1 probe for connecting the frequency counter.

Connections:

1) Connect Pin ㉕ (PB/$\overline{\text{REC}}$) of IC708 and Pin ⑤ (AFM 5V) of CN702 with a jumper wire.

Adjusting method:

1) Set REC LEVEL control to minimum (0) position.
2) Adjust RV703 to 1.70 ± 0.01 MHz.
3) Reset REC LEVEL control to maximum (10) position.

3. Recording current ratio adjustment (AS-22 board)

Mode	Recording
Signal	No signal
Measurement Point	Pin ① of CN701
Measuring Instrument	Oscilloscope
Adjusting Element	RV714
Specified Value	$\frac{\text{1.5 MHz level}}{\text{1.7 MHz level}}$ =0.80 ± 0.05

Note: Use a 1:1 probe for connecting the oscilloscope.

REC LEVEL control setting:

- Minimum (0) position

Adjusting method:

1) Connect Pin ⑭ of IC702 and GND with a 0.01 μF capacitor.
2) Adjust the vertical gain control of the oscilloscope so that the 1.5 MHz sine wave amplitude corresponds to 5 scale.
3) Remove the capacitor connected in the step 1).
4) Connect Pin ⑭ of IC701 and GND 0.01 μF capacitor.
5) Adjust RV714 so that the 1.7 MHz sine wave amplitude corresponds to 4.00 ± 0.25 scale.
6) Remove the capacitor connected in the step 4), and set the vertical gain switch of the oscilloscope to CAL position.

4. E-E output level check (AS-22 board)

Mode	REC
Signal	400 Hz, –7.5 dBs: AUDIO IN terminal L [R]
Measurement Point	Pin ⑥ [Pin ⑧] of CN702
Measuring Instrument	Oscilloscope
Specified Value	693 $^{+180}_{-140}$ mVp-p (–10 ± 2 dBs)

Checking method:

1) Connect the oscilloscope to Pin ⑤ [Pin ①] of CN703.
2) Adjust REC LEVEL control so that the 400 Hz signal level is 350 mVp-p (–16 dBs).
3) Connect the oscilloscope to Pin ⑥ [Pin ⑧] of CN702.
4) Confirm that the 400 Hz signal level is 693 $^{+180}_{-150}$ mVp-p (–10 ± 2 dBs).

5. 1.5 MHz deviation adjustment (AS-22 board)

Mode	Playback
Signal	Alignment tape for operation check (WR5-5NSP)
Measurement Point	Pin ⑥ of CN702
Measuring Instrument	Oscilloscope
Adjusting Element	RV702
Specified Value	693 ± 16 mVp-p (–10.0 ± 0.2 dBs)

Switch setting:

- AUDIO MONITOR (STEREO/MAIN/SUB) switch (S801 on LI-12 board).....MAIN

Adjusting method:

1) Adjust RV702 so that the 400 Hz signal level is 693 ± 16 mVp-p.

6. 1.7 MHz deviation adjustment (AS-22 board)

A. Method using alignment tape

Mode	Playback
Signal	Alignment tape: for AFM stereo operation check (WR5-9NS)
Measurement Point	Pin ⑧ of CN702
Measuring Instrument	Oscilloscope
Adjusting Element	RV704
Specified Value	693 ± 16 mVp-p (–10.0 ± 0.2 dBs)

Switch setting

- AUDIO MONITOR (STEREO/MAIN/SUB) switch (S801 on LI-12 board).....SUB

Adjusting method:

1) Adjust RV704 so that the 1 kHz signal level is 693 ± 16 mVp-p.

B. Method Using spectrum analyzer

Mode	Recording
Signal	No signal: AUDIO IN terminal L 400 Hz, –1.5 dBs: AUDIO IN terminal R
Measurement Point	Pin ⑭ of IC702
Measuring Instrument	Spectrum analyzer
Adjusting Element	RV704
Specified Value	30.0 ± 0.5 kHz

Adjusting method:

1) Adjust RV704 so that the frequency deviation is 30.0 ± 0.5 kHz.

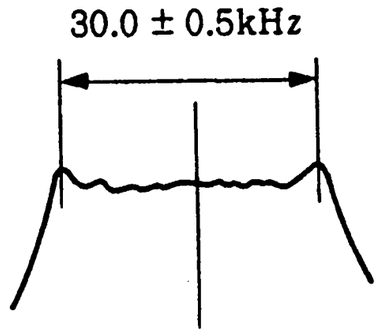

Fig. 9-53.

7. REC matrix L+R adjustment (AS-22 board)

Mode	Recording
Signal	1. 400 Hz, –7.5 dBs: AUDIO INPUT terminal L 2. 400 Hz, –7.5 dBs: AUDIO INPUT terminal R
Measurement Point	Pin ④ of IC704 (or Pin ① of IC703)
Measuring Instrument	Oscilloscope
Adjusting Element	RV706
Specified Value	The level difference between L input and R input is 0 ± 5 mVp-p.

Note: When measuring signal level at Pin ④ of IC704, start measuring 1 or more minute after input the signal. (for stabilizing AGC)

Adjusting method:

1) Input 400 Hz, –7.5 dBs signal only to AUDIO INPUT terminal L.
2) Read the signal level at Pin ④ of IC704 and make note of it. (Approximately 160 mVp-p)
3) Remove the connector from AUDIO INPUT terminal L, and input 400 Hz, –7.5 dBs signal only to AUDIO INPUT terminal R.
4) Adjust RV706 so that the signal level at Pin ④ of IC704 matches with that of noted in step 2).

8. REC matrix L–R adjustment (AS-22 board)

Mode	Recording
Signal	400 Hz, –7.5 dBs: AUDIO INPUT L, R both terminals
Measurement Point	Pin ⑨ of IC707 or Pin ⑦ of IC706
Measuring Instrument	Oscilloscope
Adjusting Element	RV707
Specified Value	0 ± 5 mVp-p

Note: Use a 1:1 probe.

Adjusting method:

1) Adjust RV707 so that the signal level at Pin ⑨ of IC707 becomes 0 ± 5 mVp-p.

9. PB matrix L adjustment (AS-22 board)

Mode	Recording and playback
Signal	No signal: AUDIO INPUT terminal L 400 Hz, –7.5 dBs: AUDIO INPUT terminal R
Measurement Point	AUDIO OUTPUT terminal L
Measuring Instrument	Audio level meter
Adjusting Element	RV710
Specified Value	Minimum L ch playback level

Adjusting method:

1) Input 400 Hz, –7.5 dB audio signal only to AUDIO INPUT terminal R.
2) Record the input signal.
3) Play back the recorded section.
4) Adjust RV710 so that the AUDIO OUT terminal L playback level becomes minimum.

10. PB matrix R adjustment (AS-22 board)

Mode	Recording and playback
Signal	400 Hz, –7.5 dB: AUDIO INPUT terminal L No signal: AUDIO INPUT terminal R
Measurement Point	AUDIO OUTPUT terminal R
Measuring Instrument	Audio level meter
Adjusting Element	RV712
Specified Value	Minimum R channel playback level

Adjusting method:

1) Input 400 Hz, –7.5 dB audio signal only to AUDIO INPUT terminal L.
2) Record the input signal.
3) Play back the recorded section.
4) Adjust RV712 so that the AUDIO OUTPUT terminal R playback level becomes minimum.

11. Overall level characteristics separation check

Mode	Self-recording and playback
Signal	400 Hz, –7.5 dBs: AUDIO IN terminal L [R] No signal (insert a shorting plug): AUDIO IN terminal R [L]
Measurement Point	AUDIO OUT terminal L and R
Measuring Instrument	Audio level meter
Specified Value	Level: –7.5 ± 3 dBs Separation: –27.5 dBs or less

Checking method:

1) Set the AUDIO OUT terminal L [R] output level to –7.5 dBs with REC LEVEL control.
2) Record the signal.
3) Play back the recorded section.
4) Confirm that the AUDIO OUT terminal L [R] output level is –7.5 ± 3 dBs.
5) Confirm that the AUDIO OUT terminal R [L] output level is –27.5 dBs or less.

12. Overall distortion check

Mode	Self-recording and playback
Signal	400 Hz, –7.5 dBs
Measurement Point	AUDIO OUT terminal L [R]
Measuring Instrument	Distortion meter
Specified Value	0.8% or less*[1]

Checking method:

1) Set the AUDIO OUT terminal L [R] output level to –7.5 dBs with REC LEVEL control.
2) Record the signal.
3) Play back the recorded section.
4) Confirm that the distortion is less than 0.8%. @/*1@

*1: Value when a distortion measuring filter (Fig. 9-54.) is used. Less than 1.0% when no filter is used.

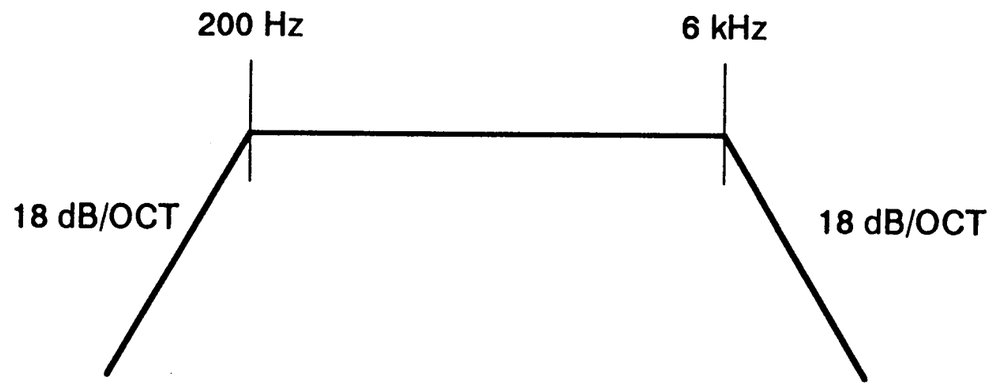

Fig. 9-54.

CCD-V5000
RMT-500

9-972-895-11

Sony Corporation
Personal Video Group

English
90D0950-1
Printed in Japan
© 1990.4
Published by Customer Relations and Service Group

CCD-V5000
RMT-500

SERVICE MANUAL

US Model
Canadian Model
E Model

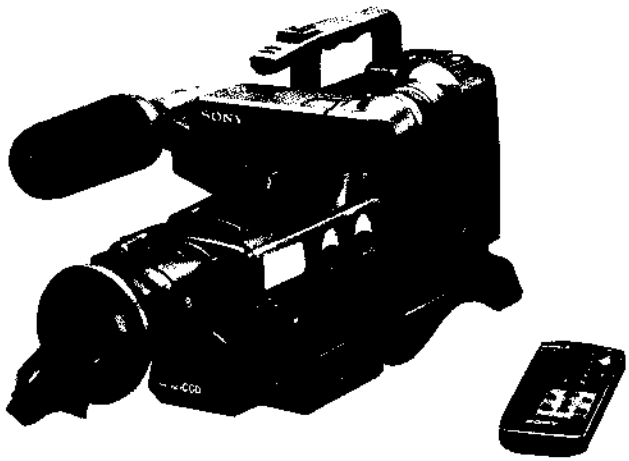

Hi8 PRO

U MECHANISM

For MECHANISM ADJUSTMENTS, refer to the "8 mm Video MECHANICAL ADJUSTMENT MANUAL Ⅲ" (9-972-732-11).

SPECIFICATIONS

System

Video recording system	Rotary two heads, Helical scanning FM system
Audio recording system	Standard: Rotary head, FM system (2 channels)
	PCM: PCM system (2 channels)
Video signal	NTSC color, EIA standards
Usable cassette	8 mm video format cassette
Tape speed	SP: Approx. 1.43 cm/sec.
	LP: Approx. 0.72 cm/sec. (playback only)
Recording time	SP mode: 2 hours (E6/P6 - 120)
Playback time	SP mode: 2 hours
	LP mode: 4 hours (E6/P6 - 120)
Fast forward/rewind time	Approx. 7 min. (E6/P6 - 120)
Image device	CCD (Charge Coupled Device)
Viewfinder	Electronic viewfinder (black and white)
Lens	Combined 8 × power zoom lens
	f = 11 - 88 mm, F1.4 with macro
	Filter diameter: 52 mm
Auto focus system	TTL
Color temperature	Auto: One push white balance
	INDOOR 3,200 K
	OUTDOOR 5,800 K
Minimum illumination	2 lux (F1.4)
Illumination range	2 lux - 100,000 lux (0.2 - 9,294 footcandles)
Recommended illumination	More than 100 lux (9.3 footcandles)
Aperture correction	Automatic, manual (variable)

PCM

Sampling frequency	31.5 kHz
Audio frequency	20 Hz - 15 kHz
Dynamic range	More than 85 dB
Wow and flutter	Less than 0.005% RMS

Input and output connector

Video output	Phono jack, 1 Vp-p, 75 ohms unbalanced, sync negative

— Continued on next page —

- **SERVICE OF REMOTE COMMANDER RMT-500**

Remote commander RMT-500 is available as a unit. But as individual parts the battery case lid of commander is only avaiable.

MICROFILM

8 VIDEO CAMERA RECORDER

SONY

3-2. OVERALL BLOCK DIAGRAM

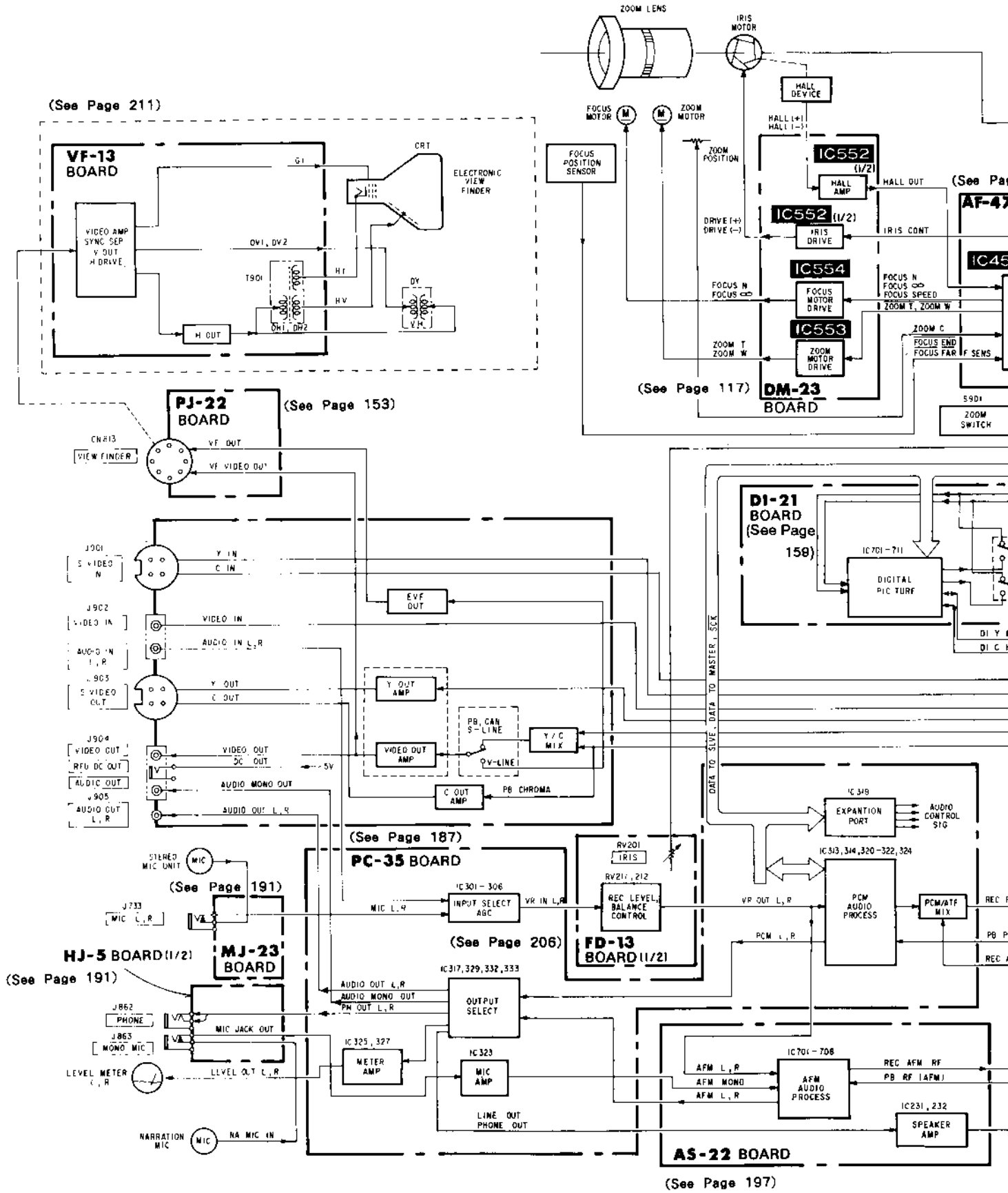

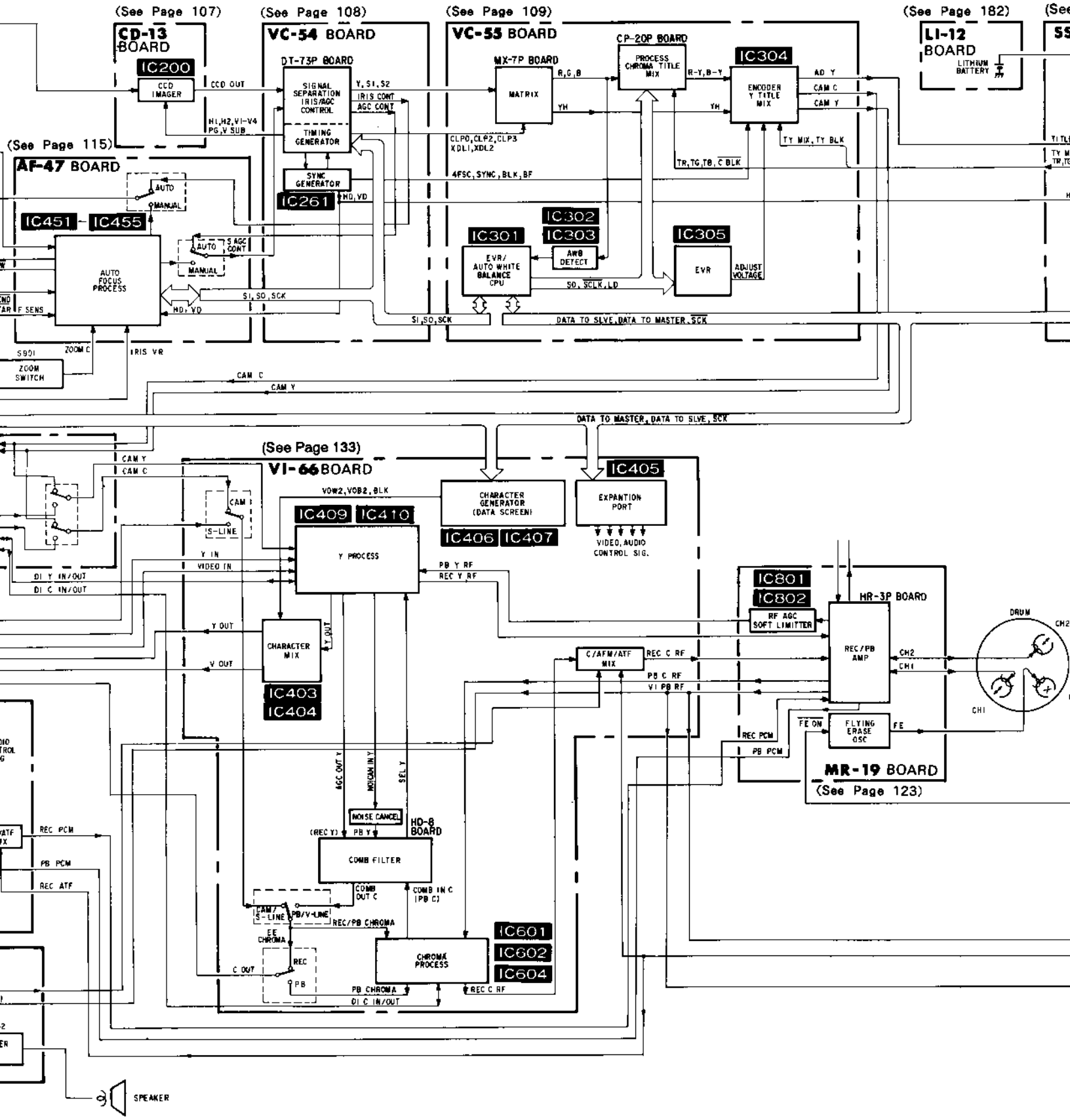
(See Page 107)
CD-13 BOARD
IC200
CCD IMAGER
CCD OUT
H1,H2,V1-V4
PG,V SUB
(See Page 108)
VC-54 BOARD
DT-73P BOARD
SIGNAL SEPARATION IRIS/AGC CONTROL
TIMING GENERATOR
Y, S1, S2
IRIS CONT
AGC CONT
SYNC GENERATOR
IC261
SND, VD
(See Page 109)
VC-55 BOARD
MX-7P BOARD
MATRIX
R,G,B
YH
CP-20P BOARD
PROCESS CHROMA TITLE MIX
R-Y, B-Y
IC304
ENCODER Y TITLE MIX
AD Y
CAM C
CAM Y
TY MIX, TY BLK
TR,TG,TB, C BLK
CLP0,CLP2,CLP3
XDL1,XDL2
4FSC, SYNC, BLK, BF
IC301
EVR/ AUTO WHITE BALANCE CPU
IC302
IC303
AWB DETECT
IC305
EVR
ADJUST VOLTAGE
SO, SCLK, LD
SI, SO, SCK
DATA TO SLVE, DATA TO MASTER, SCK
(See Page 182)
LI-12 BOARD
LITHIUM BATTERY
(See Page 115)
AF-47 BOARD
AUTO
MANUAL
IC451 - IC455
AUTO FOCUS PROCESS
S AGC CONT
F SENS
HD, VD
S901
ZOOM SWITCH
ZOOM C
IRIS VR
CAM C
CAM Y
DATA TO MASTER, DATA TO SLVE, SCK
(See Page 133)
VI-66 BOARD
CAM Y
CAM C
CAM S-LINE
Y IN
VIDEO IN
DI Y IN/OUT
DI C IN/OUT
VOW2, VOB2, BLK
IC409 IC410
Y PROCESS
CHARACTER GENERATOR (DATA SCREEN)
IC406 IC407
IC405
EXPANTION PORT
VIDEO, AUDIO CONTROL SIG.
PB Y RF
REC Y RF
Y OUT
V OUT
CHARACTER MIX
IC403
IC404
IC801
IC802
HR-3P BOARD
RF AGC SOFT LIMITTER
C/AFM/ATF MIX
REC C RF
PB C RF
VI PB RF
REC/PB AMP
CH2
CH1
DRUM
REC PCM
PB PCM
FE ON
FLYING ERASE OSC
FE
MR-19 BOARD
(See Page 123)
AGC OUT Y
NONCAM IN Y
SEL Y
NOISE CANCEL
HD-8 BOARD
(REC Y)
PB Y
COMB FILTER
COMB OUT C
COMB IN C (PB C)
CAM S-LINE
PB/V-LINE
REC/PB CHROMA
EE CHROMA
REC
PB
C OUT
CHROMA PROCESS
IC601
IC602
IC604
PB CHROMA
REC C RF
DI C IN/OUT
REC PCM
PB PCM
REC ATF
SPEAKER

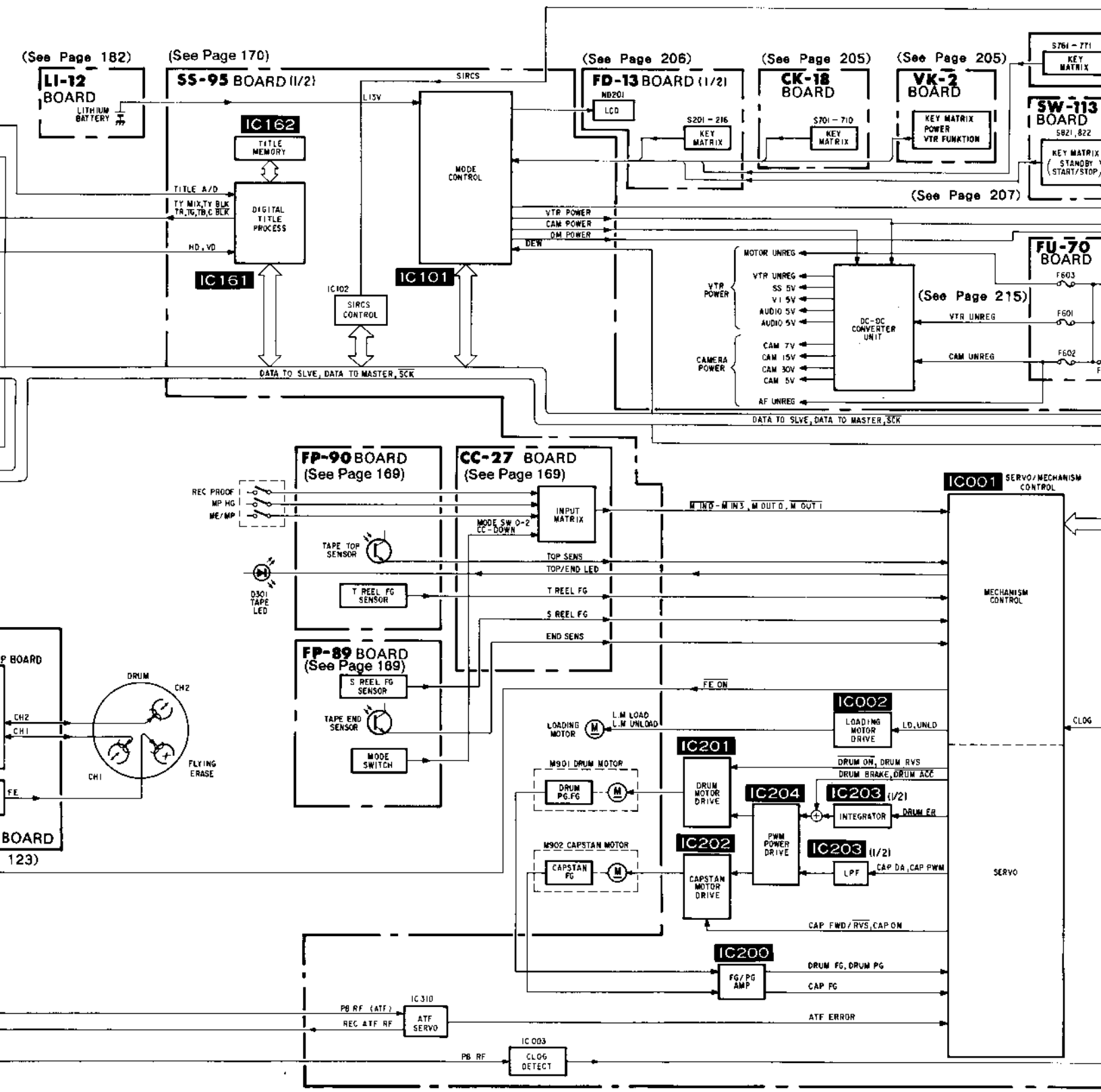
(See Page 182)
LI-12 BOARD
LITHIUM BATTERY
(See Page 170)
SS-95 BOARD (1/2)
IC162
TITLE MEMORY
DIGITAL TITLE PROCESS
IC161
TITLE A/D
TY MIX,TY BLK
TR,TG,TB,C BLK
HD,VD
IC102
SIRCS CONTROL
SIRCS
L13V
MODE CONTROL
IC101
DATA TO SLVE, DATA TO MASTER, SCK
(See Page 206)
FD-13 BOARD (1/2)
ND201
LCD
S201 - 216
KEY MATRIX
(See Page 205)
CK-18 BOARD
S701 - 710
KEY MATRIX
(See Page 205)
VK-2 BOARD
KEY MATRIX POWER VTR FUNKTION
S761 - 771
KEY MATRIX
SW-113 BOARD
S821, 822
KEY MATRIX (STANDBY START/STOP)
(See Page 207)
VTR POWER
CAM POWER
DM POWER
DEW
MOTOR UNREG
VTR POWER
VTR UNREG
SS 5V
V I 5V
AUDIO 5V
AUDIO 5V
CAMERA POWER
CAM 7V
CAM 15V
CAM 30V
CAM 5V
AF UNREG
DC-DC CONVERTER UNIT
FU-70 BOARD
F603
F601
F602
(See Page 215)
VTR UNREG
CAM UNREG
DATA TO SLVE, DATA TO MASTER, SCK
FP-90 BOARD
(See Page 169)
REC PROOF
MP HG
ME/MP
TAPE TOP SENSOR
D301 TAPE LED
T REEL FG SENSOR
CC-27 BOARD
(See Page 169)
INPUT MATRIX
MODE SW 0-2
CC-DOWN
M IN0 - M IN3, M OUT 0, M OUT 1
TOP SENS
TOP/END LED
T REEL FG
S REEL FG
END SENS
FP-89 BOARD
(See Page 169)
S REEL FG SENSOR
TAPE END SENSOR
MODE SWITCH
IC001
SERVO/MECHANISM CONTROL
MECHANISM CONTROL
FE ON
IC002
LOADING MOTOR DRIVE
LOADING MOTOR
L.M LOAD
L.M UNLOAD
LD, UNLD
CLOG
IC201
DRUM MOTOR DRIVE
M901 DRUM MOTOR
DRUM PG,FG
DRUM ON, DRUM RVS
DRUM BRAKE, DRUM ACC
IC204
PWM POWER DRIVE
IC203 (1/2)
INTEGRATOR
DRUM ER
IC202
CAPSTAN MOTOR DRIVE
M902 CAPSTAN MOTOR
CAPSTAN FG
IC203 (1/2)
LPF
CAP DA, CAP PWM
SERVO
CAP FWD/RVS, CAP ON
IC200
FG/PG AMP
DRUM FG, DRUM PG
CAP FG
IC310
ATF SERVO
PB RF (ATF)
REC ATF RF
ATF ERROR
IC003
CLOG DETECT
PB RF
DRUM
CH2
CH1
FLYING ERASE
FE
BOARD
123)

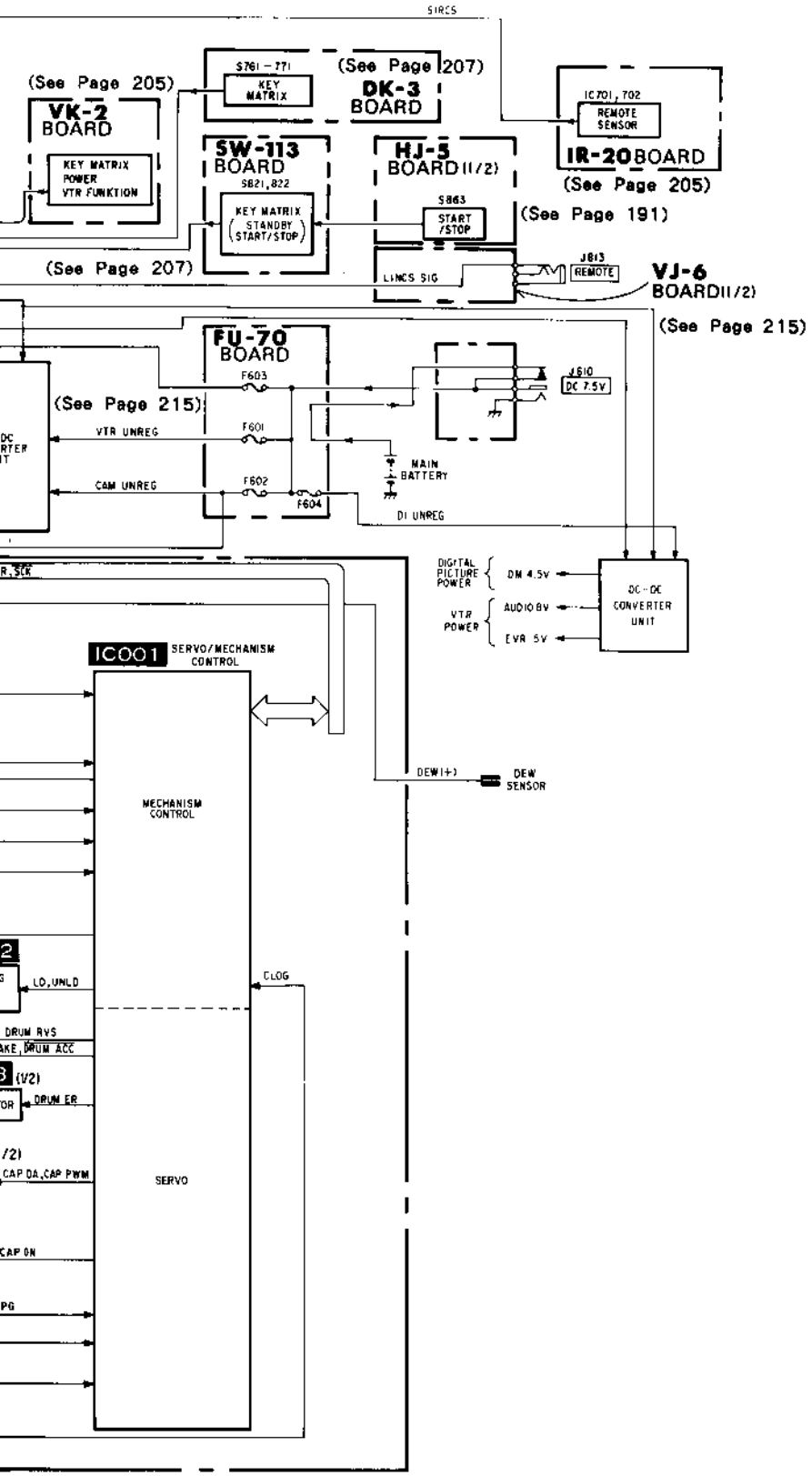
SIRCS
(See Page 205)
VK-2 BOARD
KEY MATRIX POWER VTR FUNKTION
S761 – 771
KEY MATRIX
(See Page 207)
DK-3 BOARD
IC701, 702
REMOTE SENSOR
IR-20 BOARD
(See Page 205)
SW-113 BOARD
S821, 822
KEY MATRIX (STANDBY START/STOP)
HJ-5 BOARD (1/2)
S863
START /STOP
(See Page 191)
(See Page 207)
LINCS SIG
J813
REMOTE
VJ-6 BOARD (1/2)
(See Page 215)
FU-70 BOARD
F603
J610
DC 7.5V
(See Page 215)
VTR UNREG
F601
CAM UNREG
F602
F604
MAIN BATTERY
DI UNREG
DIGITAL PICTURE POWER
DM 4.5V
VTR POWER
AUDIO 8V
EVR 5V
DC-DC CONVERTER UNIT
IC001 SERVO/MECHANISM CONTROL
DEW(+)
DEW SENSOR
MECHANISM CONTROL
SERVO
LD, UNLD
DRUM RVS
DRUM ACC
DRUM ER
CAP DA, CAP PWM
CAP ON
PG
DLOG

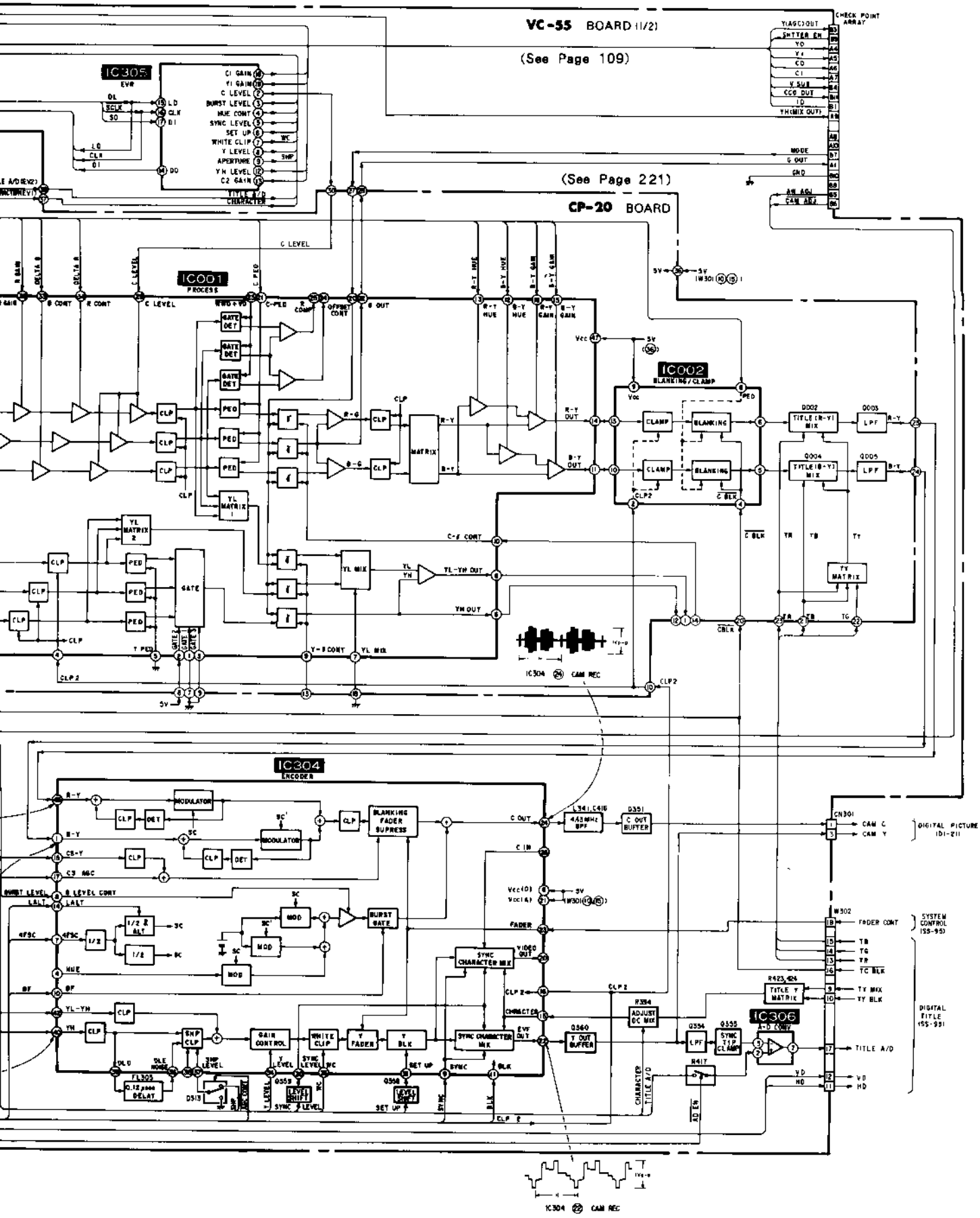
VC-55 BOARD (1/2)
(See Page 109)
(See Page 221)
CP-20 BOARD
IC305
EVR
IC001
PROCESS
IC002
BLANKING/CLAMP
IC304
ENCODER
IC306
A-D CONV
CHECK POINT ARRAY
DIGITAL PICTURE (DI-21)
SYSTEM CONTROL (SS-95)
DIGITAL TITLE (SS-95)
IC304 (24) CAM REC
IC304 (22) CAM REC

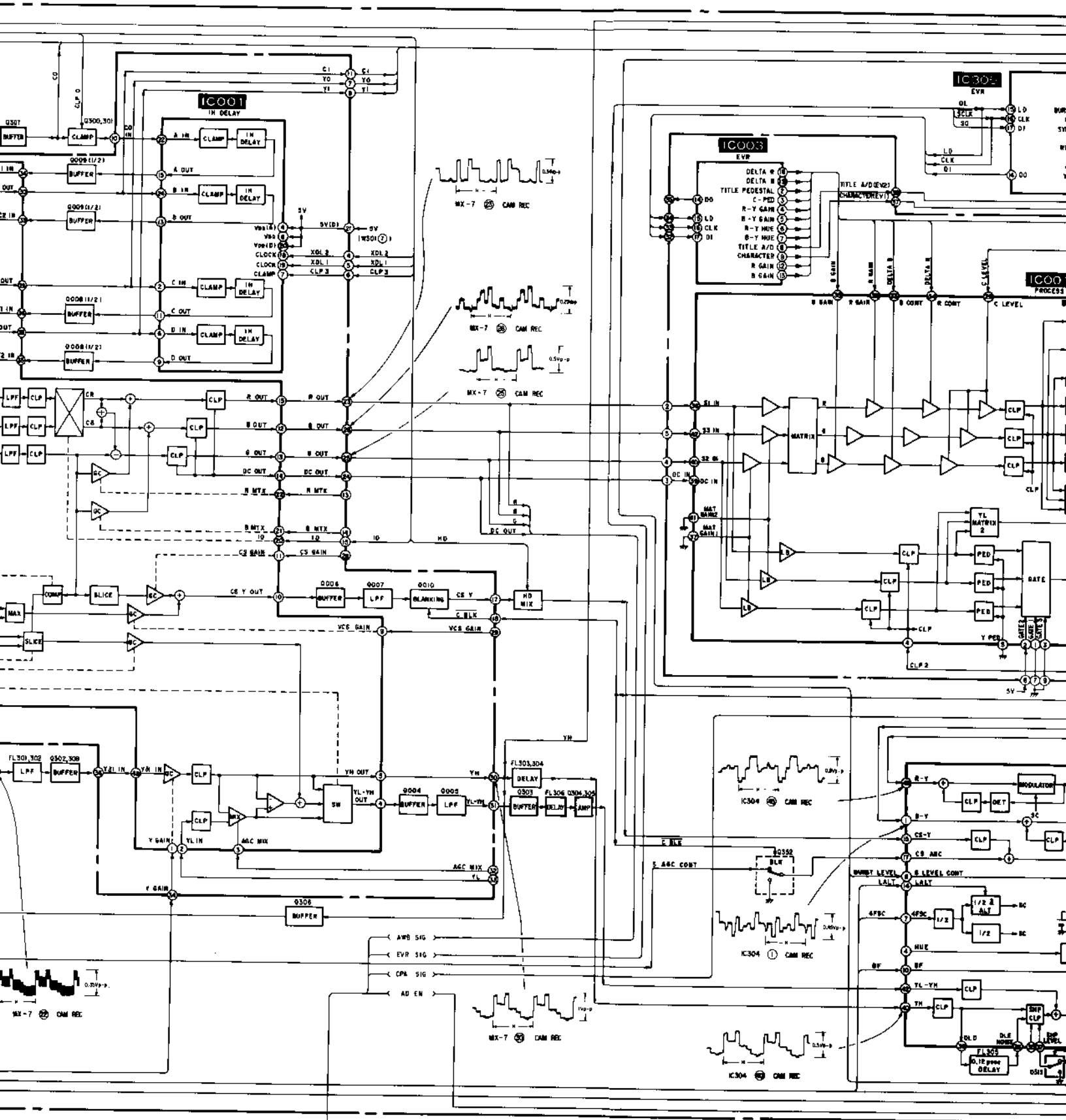
IC001
IH DELAY
IC003
EVR
IC304
EVR
IC00
PROCESS
MX-7 CAM REC
MATRIX
GATE
MODULATOR
BUFFER
CLAMP
LPF
CLP
SLICE
BLANKING
HD MIX
DELAY
AMP
SW
AWB SIG
EVR SIG
CPA SIG
AD EN

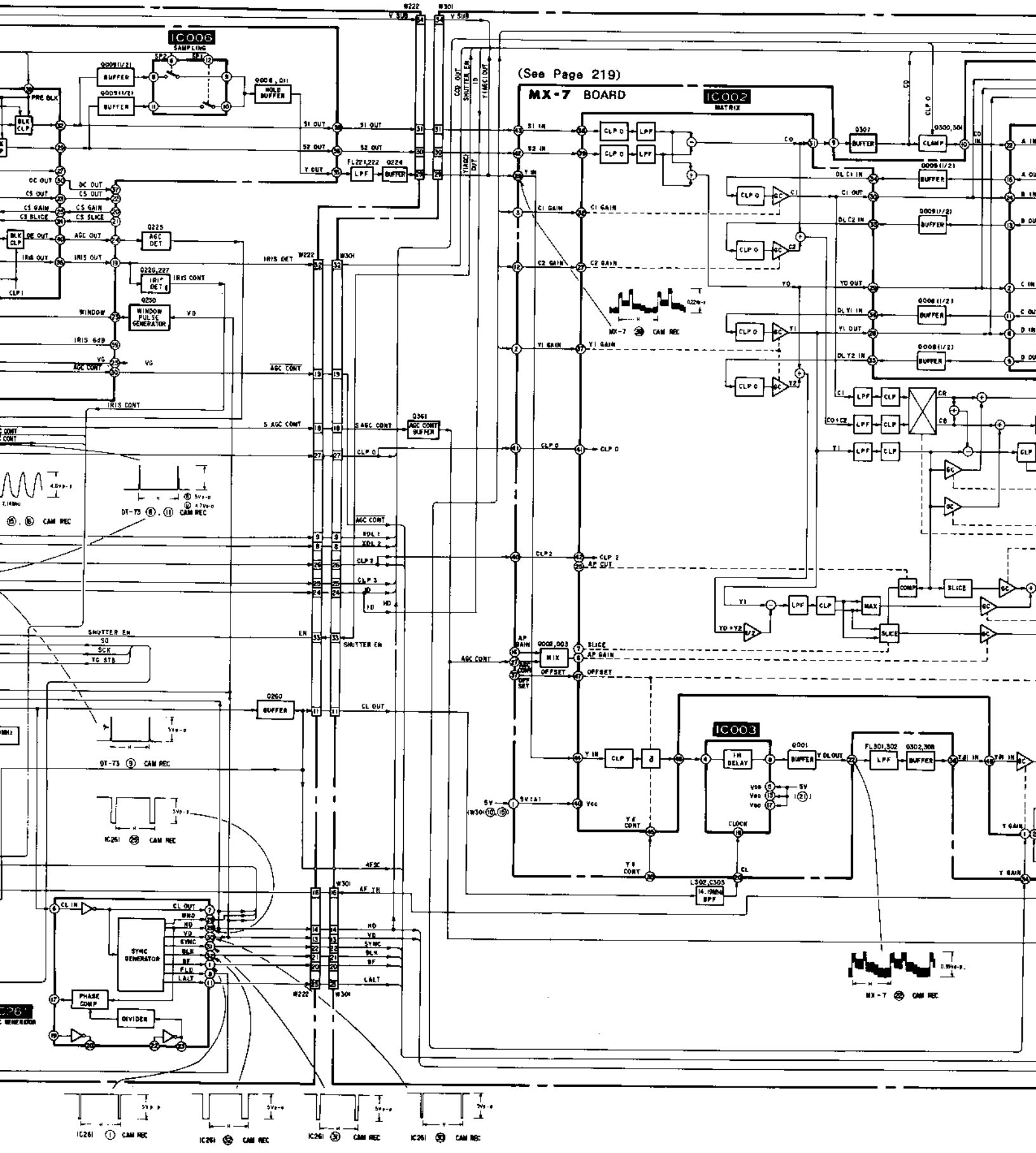

IC006
SAMPLING
(See Page 219)
MX-7 BOARD
IC002
MATRIX
IC003
SYNC GENERATOR
PHASE COMP
DIVIDER

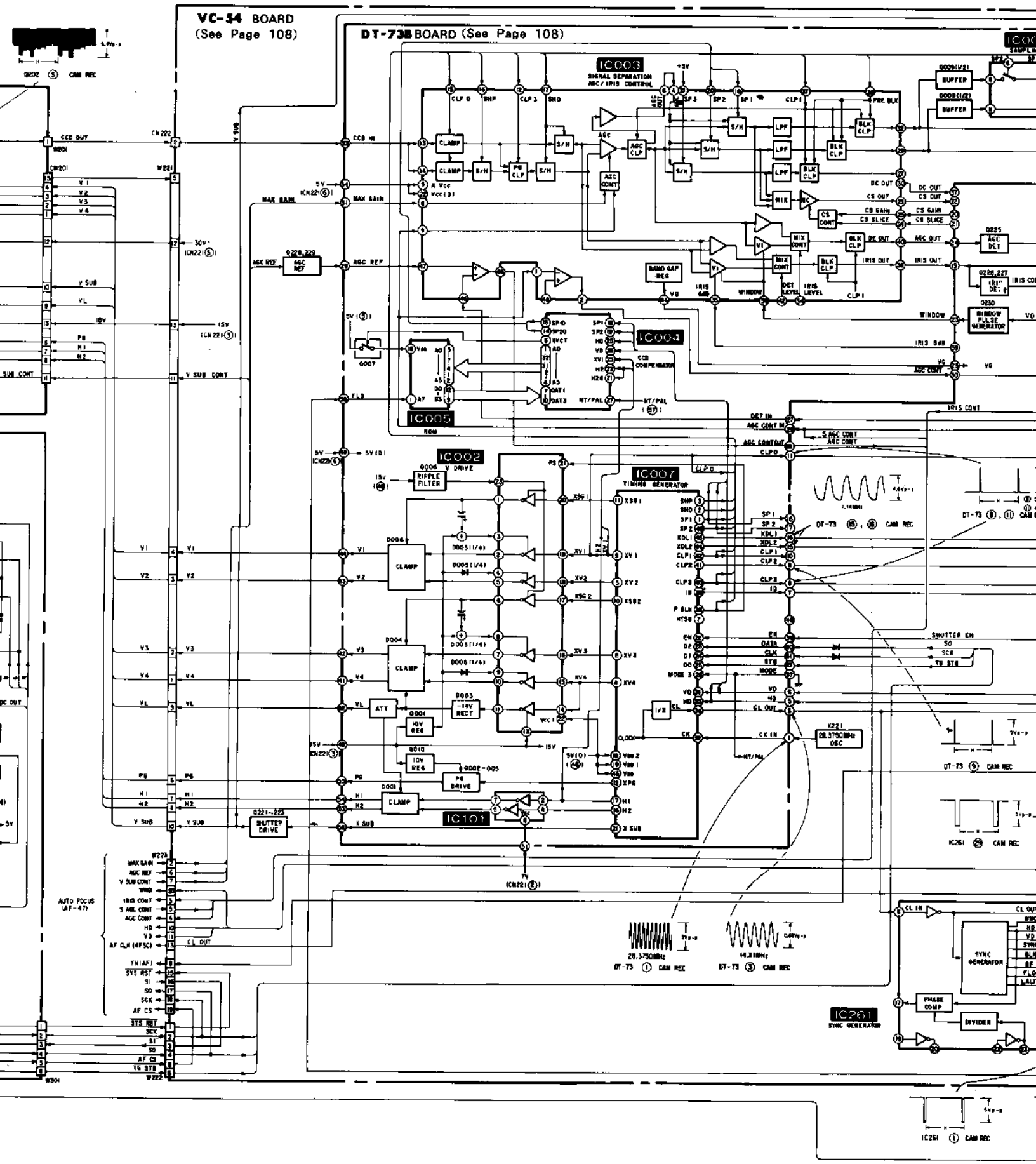
VC-54 BOARD
(See Page 108)
DT-73B BOARD (See Page 108)
IC003
SIGNAL SEPARATION
AGC/IRIS CONTROL
IC004
CCD COMPENSATOR
IC005
ROM
IC002
V DRIVE
RIPPLE FILTER
IC007
TIMING GENERATOR
IC101
IC261
SYNC GENERATOR
AUTO FOCUS (AF-47)
SHUTTER DRIVE
CLAMP
ATT
10V REG
-14V RECT
PG DRIVE
BUFFER
WINDOW PULSE GENERATOR
PHASE COMP
DIVIDER
28.3750MHz OSC
DT-73 ① CAM REC
DT-73 ③ CAM REC
DT-73 ⑨ CAM REC
IC261 ① CAM REC

3-3. CAMERA BLOCK DIAGRAM

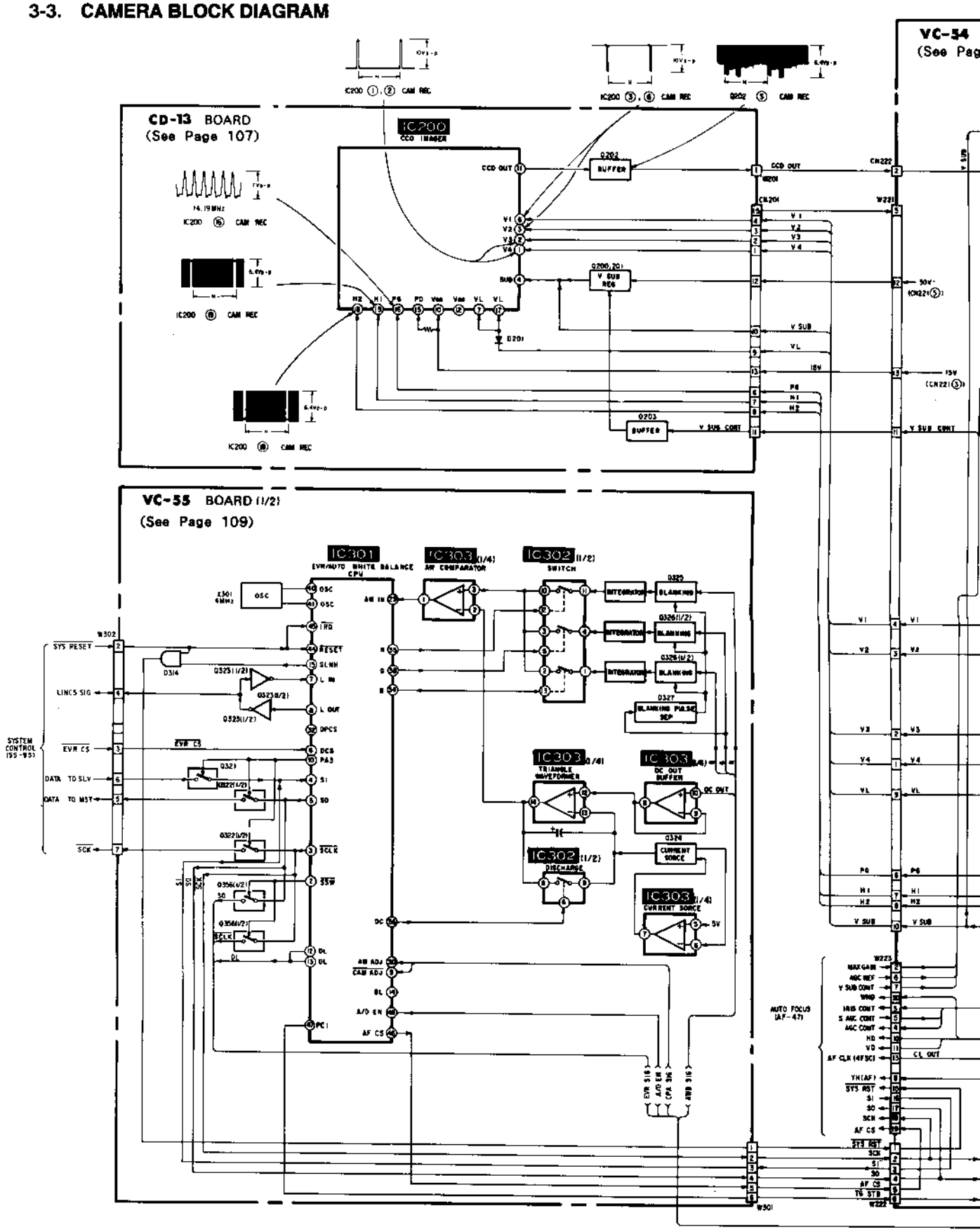

3-4. AUTO FOCUS BLOCK DIAGRAM

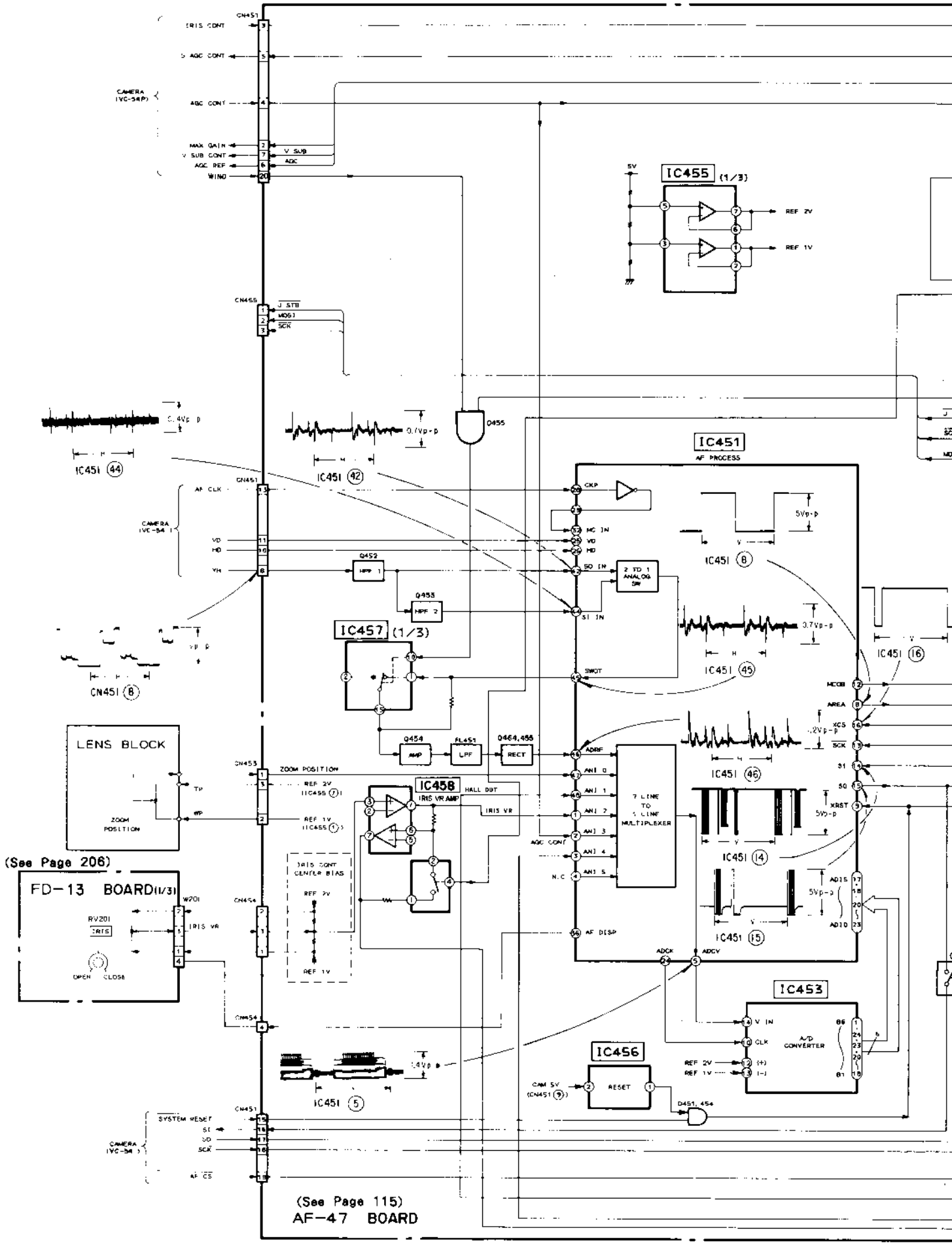

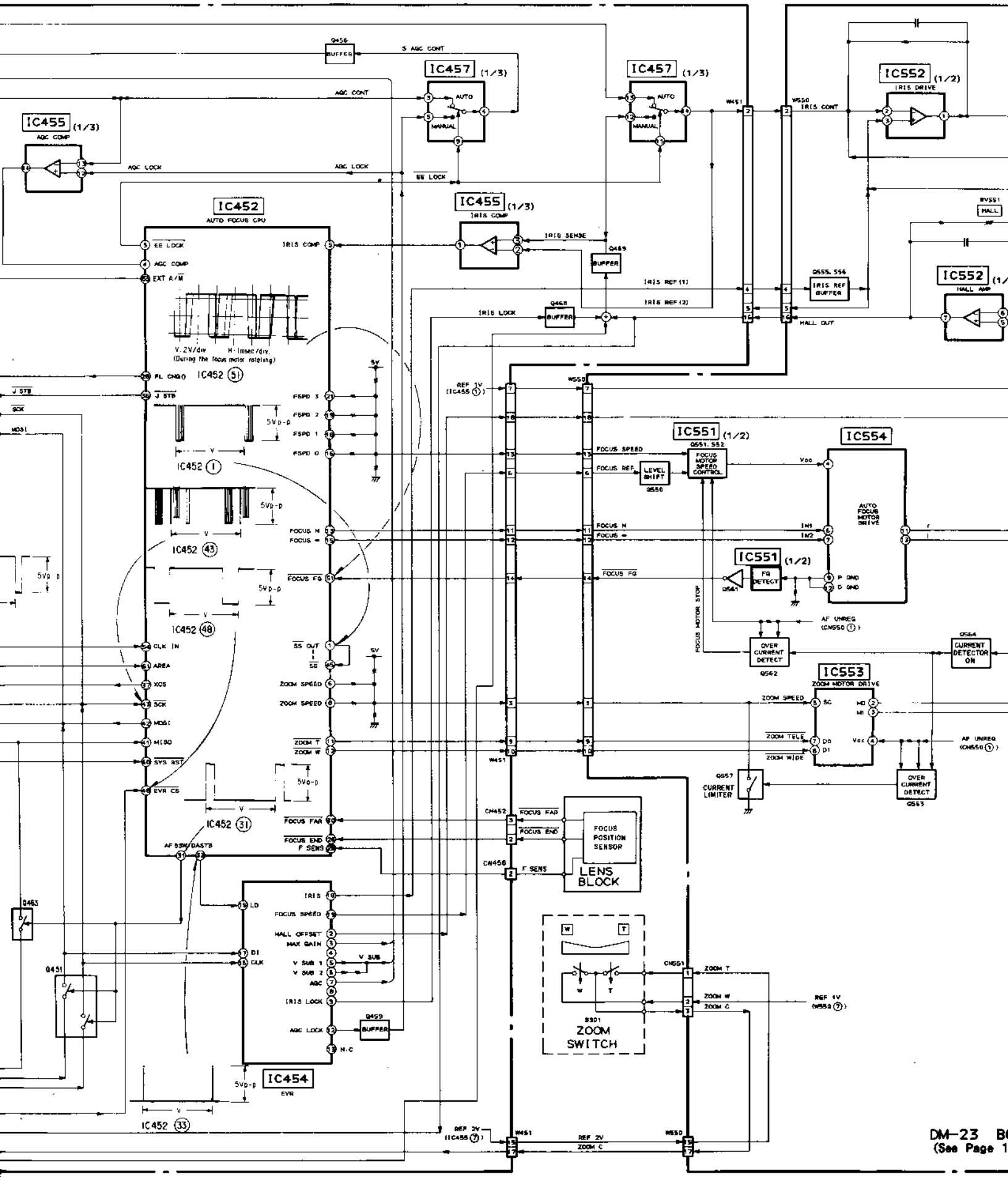

DM-23 B
(See Page 1

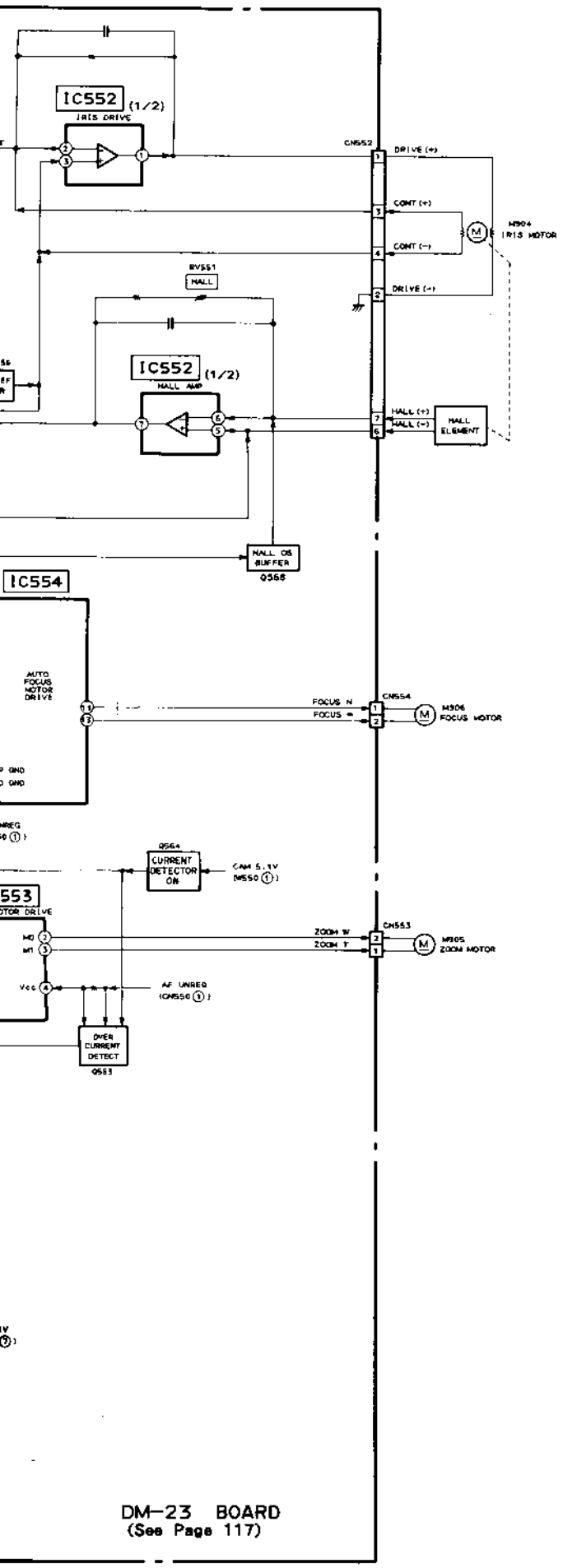
IC552 (1/2)
IRIS DRIVE
CN552
DRIVE (+)
CONT (+)
CONT (−)
M904
IRIS MOTOR
RV551
HALL
DRIVE (+)
IC552 (1/2)
HALL AMP
HALL (+)
HALL (−)
HALL ELEMENT
HALL OS BUFFER
Q566
IC554
AUTO FOCUS MOTOR DRIVE
FOCUS N
FOCUS −
CN554
M906
FOCUS MOTOR
Q564
CURRENT DETECTOR ON
CAM 5.1V
(M550 ①)
553
OTOR DRIVE
ZOOM W
ZOOM T
CN553
M905
ZOOM MOTOR
Vcc
AF UNREQ
(CN550 ①)
OVER CURRENT DETECT
Q563
DM-23 BOARD
(See Page 117)

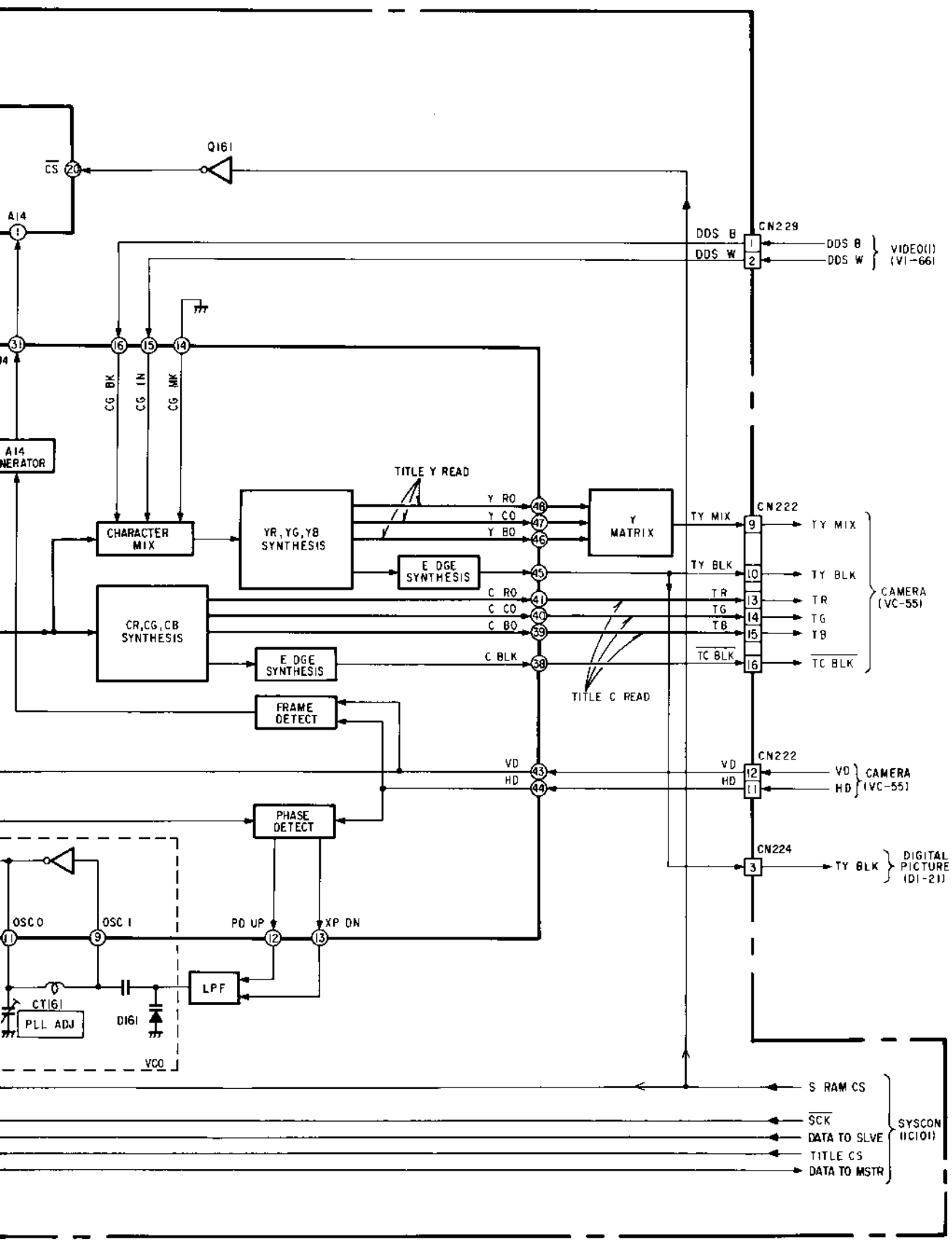
Q161
CS
A14
DDS B
DDS W
CN229
VIDEO(I) (VI-66)
CG BK
CG IN
CG MK
A14 NERATOR
TITLE Y READ
CHARACTER MIX
YR, YG, YB SYNTHESIS
Y RO
Y GO
Y BO
Y MATRIX
E DGE SYNTHESIS
CR, CG, CB SYNTHESIS
C RO
C GO
C BO
C BLK
E DGE SYNTHESIS
TITLE C READ
FRAME DETECT
TY MIX
TY BLK
TR
TG
TB
TC BLK
CN222
CAMERA (VC-55)
VD
HD
PHASE DETECT
CN224
DIGITAL PICTURE (DI-21)
OSC O
OSC I
PD UP
XP DN
LPF
CT161
PLL ADJ
DI61
VCO
S RAM CS
SCK
DATA TO SLVE
TITLE CS
DATA TO MSTR
SYSCON (IC101)

3-5. DIGITAL TITLER BLOCK DIAGRAM

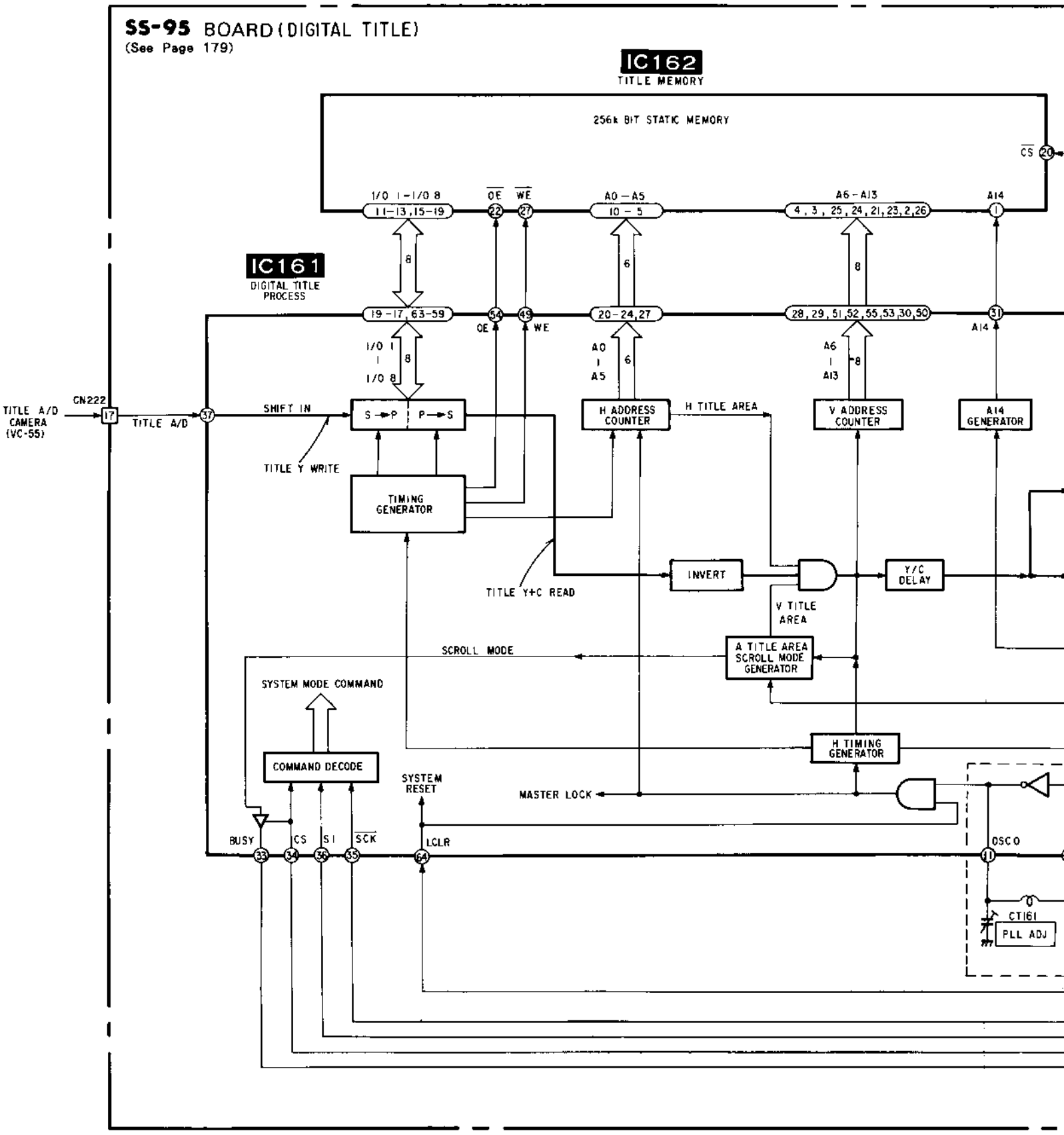

3-6. VIDEO (1) BLOCK DIAGRAM

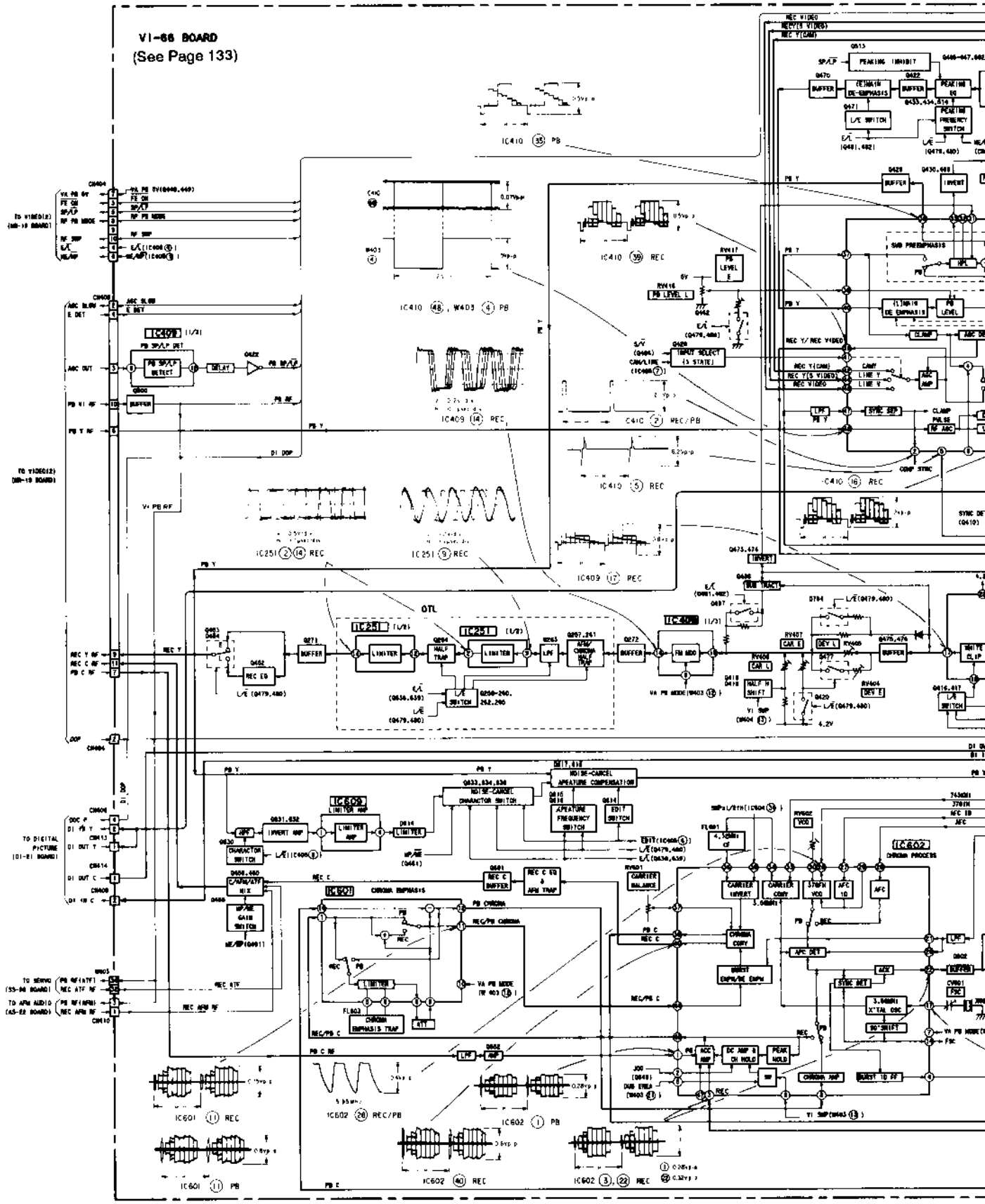

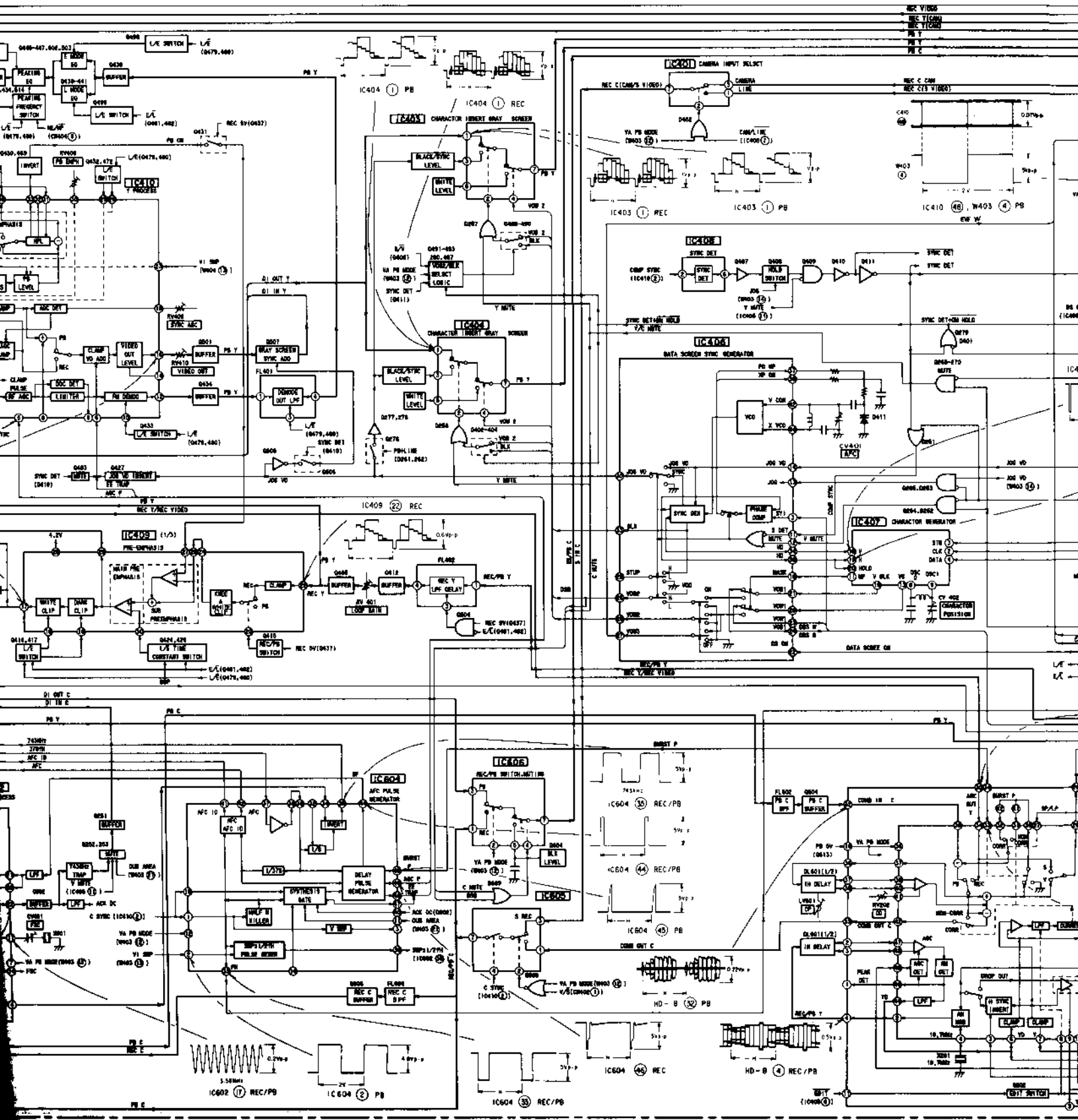

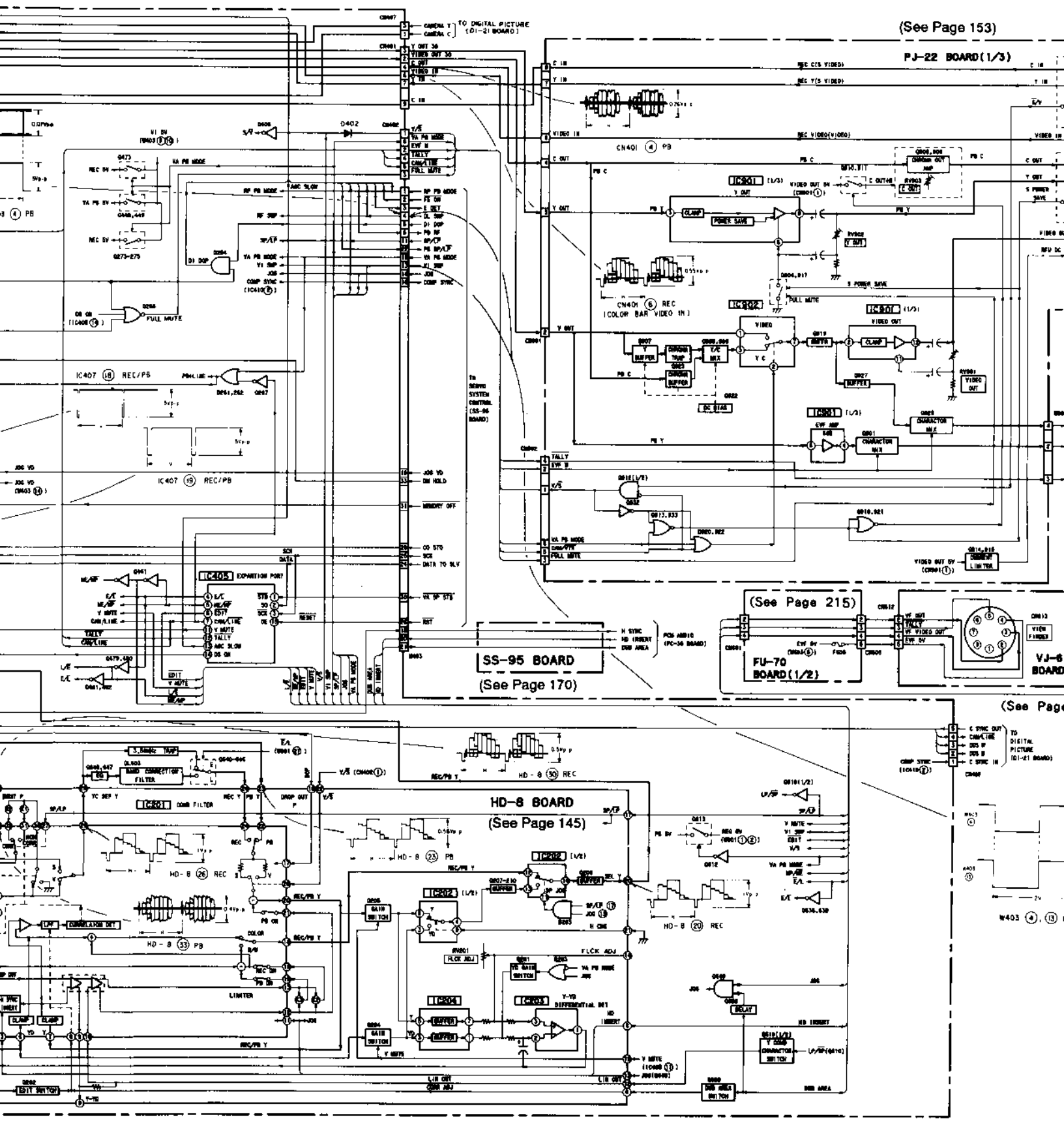
(See Page 153)
PJ-22 BOARD(1/3)
SS-95 BOARD
(See Page 170)
(See Page 215)
FU-70
BOARD(1/2)
HD-8 BOARD
(See Page 145)
IC401
IC402
IC403
IC404
IC405
IC407
IC501
IC502
IC503
IC504
IC505
IC506
IC507
IC508
IC509
IC510
IC511
IC512
IC513
IC514
IC515
IC516
IC517
IC518
IC519
IC520
IC521
IC522
IC523
IC524
IC525
IC526
IC527
IC528
IC529
IC530
IC531
IC532
IC533
IC534
IC535
IC536
IC537
IC538
IC539
IC540
IC541
IC542
IC543
IC544
IC545
IC546
IC547
IC548
IC549
IC550
IC551
IC552
IC553
IC554
IC555
IC556
IC557
IC558
IC559
IC560
IC561
IC562
IC563
IC564
IC565
IC566
IC567
IC568
IC569
IC570
IC571
IC572
IC573
IC574
IC575
IC576
IC577
IC578
IC579
IC580
IC581
IC582
IC583
IC584
IC585
IC586
IC587
IC588
IC589
IC590
IC591
IC592
IC593
IC594
IC595
IC596
IC597
IC598
IC599
IC600
IC601
IC602
IC603
IC604
IC605
IC606
IC607
IC608
IC609
IC610
IC611
IC612
IC613
IC614
IC615
IC616
IC617
IC618
IC619
IC620
IC621
IC622
IC623
IC624
IC625
IC626
IC627
IC628
IC629
IC630
IC631
IC632
IC633
IC634
IC635
IC636
IC637
IC638
IC639
IC640
IC641
IC642
IC643
IC644
IC645
IC646
IC647
IC648
IC649
IC650
IC651
IC652
IC653
IC654
IC655
IC656
IC657
IC658
IC659
IC660
IC661
IC662
IC663
IC664
IC665
IC666
IC667
IC668
IC669
IC670
IC671
IC672
IC673
IC674
IC675
IC676
IC677
IC678
IC679
IC680
IC681
IC682
IC683
IC684
IC685
IC686
IC687
IC688
IC689
IC690
IC691
IC692
IC693
IC694
IC695
IC696
IC697
IC698
IC699
IC700
IC701
IC702
IC703
IC704
IC705
IC706
IC707
IC708
IC709
IC710
IC711
IC712
IC713
IC714
IC715
IC716
IC717
IC718
IC719
IC720
IC721
IC722
IC723
IC724
IC725
IC726
IC727
IC728
IC729
IC730
IC731
IC732
IC733
IC734
IC735
IC736
IC737
IC738
IC739
IC740
IC741
IC742
IC743
IC744
IC745
IC746
IC747
IC748
IC749
IC750
IC751
IC752
IC753
IC754
IC755
IC756
IC757
IC758
IC759
IC760
IC761
IC762
IC763
IC764
IC765
IC766
IC767
IC768
IC769
IC770
IC771
IC772
IC773
IC774
IC775
IC776
IC777
IC778
IC779
IC780
IC781
IC782
IC783
IC784
IC785
IC786
IC787
IC788
IC789
IC790
IC791
IC792
IC793
IC794
IC795
IC796
IC797
IC798
IC799
IC800
IC801
IC802
IC803
IC804
IC805
IC806
IC807
IC808
IC809
IC810
IC811
IC812
IC813
IC814
IC815
IC816
IC817
IC818
IC819
IC820
IC821
IC822
IC823
IC824
IC825
IC826
IC827
IC828
IC829
IC830
IC831
IC832
IC833
IC834
IC835
IC836
IC837
IC838
IC839
IC840
IC841
IC842
IC843
IC844
IC845
IC846
IC847
IC848
IC849
IC850
IC851
IC852
IC853
IC854
IC855
IC856
IC857
IC858
IC859
IC860
IC861
IC862
IC863
IC864
IC865
IC866
IC867
IC868
IC869
IC870
IC871
IC872
IC873
IC874
IC875
IC876
IC877
IC878
IC879
IC880
IC881
IC882
IC883
IC884
IC885
IC886
IC887
IC888
IC889
IC890
IC891
IC892
IC893
IC894
IC895
IC896
IC897
IC898
IC899
IC900
IC901
IC902
IC903
IC904
IC905
IC906
IC907
IC908
IC909
IC910
IC911
IC912
IC913
IC914
IC915
IC916
IC917
IC918
IC919
IC920
IC921
IC922
IC923
IC924
IC925
IC926
IC927
IC928
IC929
IC930
IC931
IC932
IC933
IC934
IC935
IC936
IC937
IC938
IC939
IC940
IC941
IC942
IC943
IC944
IC945
IC946
IC947
IC948
IC949
IC950
IC951
IC952
IC953
IC954
IC955
IC956
IC957
IC958
IC959
IC960
IC961
IC962
IC963
IC964
IC965
IC966
IC967
IC968
IC969
IC970
IC971
IC972
IC973
IC974
IC975
IC976
IC977
IC978
IC979
IC980
IC981
IC982
IC983
IC984
IC985
IC986
IC987
IC988
IC989
IC990
IC991
IC992
IC993
IC994
IC995
IC996
IC997
IC998
IC999
IC1000

(See Page 153)

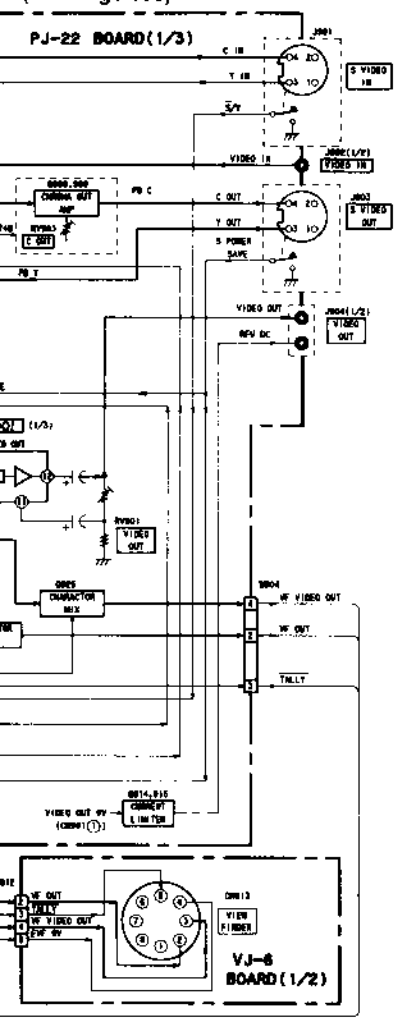

(See Page 215)

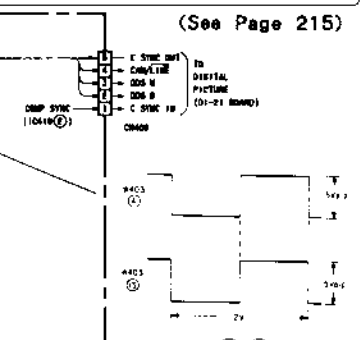

W403 ④, ⑬ PB

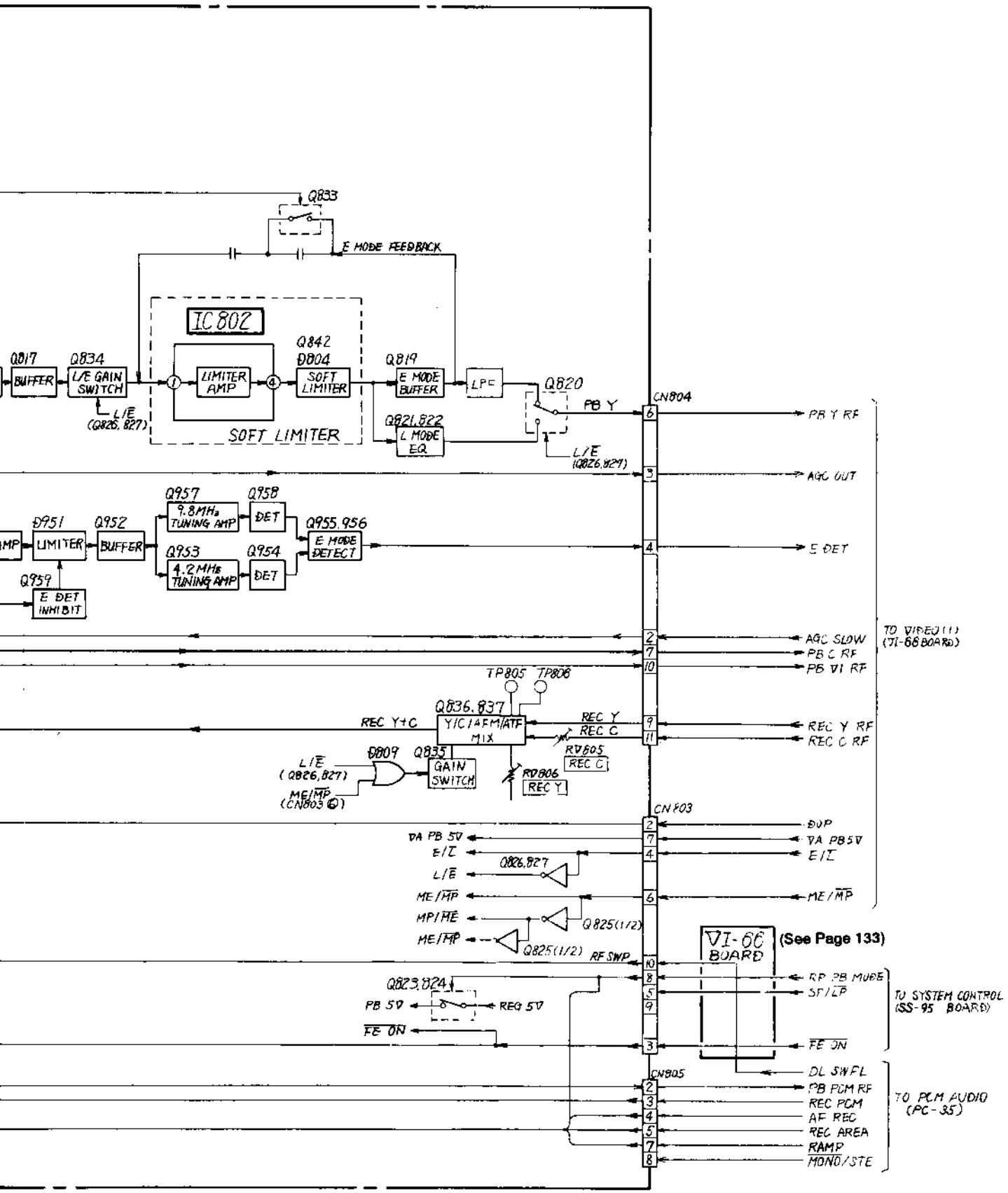
Q833
E MODE FEEDBACK
IC802
Q817
BUFFER
Q834
L/E GAIN SWITCH
L/E (Q826, 827)
LIMITER AMP
Q842
D804
SOFT LIMITER
SOFT LIMITER
Q819
E MODE BUFFER
LPF
Q820
PB Y
Q821,822
L MODE EQ
L/E (Q826,827)
CN804
PB Y RF
AGC OUT
E DET
Q957
9.8MHz TUNING AMP
Q958
DET
Q955,956
E MODE DETECT
D951
LIMITER
Q952
BUFFER
Q953
4.2MHz TUNING AMP
Q954
DET
Q959
E DET INHIBIT
AGC SLOW
PB C RF
PB VI RF
TO VIDEO (I) (VI-66 BOARD)
TP805
TP806
Q836,837
YIC/AFM/ATF MIX
REC Y+C
REC Y
REC C
RV805
REC C
RV806
REC Y
REC Y RF
REC C RF
D809
Q835
GAIN SWITCH
L/E (Q826,827)
ME/MP (CN803 6)
CN803
DUP
VA PB 5V
E/E
L/E
Q826,827
ME/MP
MP/ME
Q825(1/2)
ME/MP
Q825(1/2)
VA PB 5V
E/E
ME/MP
VI-66 BOARD
(See Page 133)
RF SWP
Q823,824
PB 5V
REG 5V
FE ON
RP PB MODE
SP/LP
FE ON
TO SYSTEM CONTROL (SS-95 BOARD)
DL SWFL
CN805
PB PCM RF
REC PCM
AF REC
REC AREA
RAMP
MONO/STE
TO PCM AUDIO (PC-35)

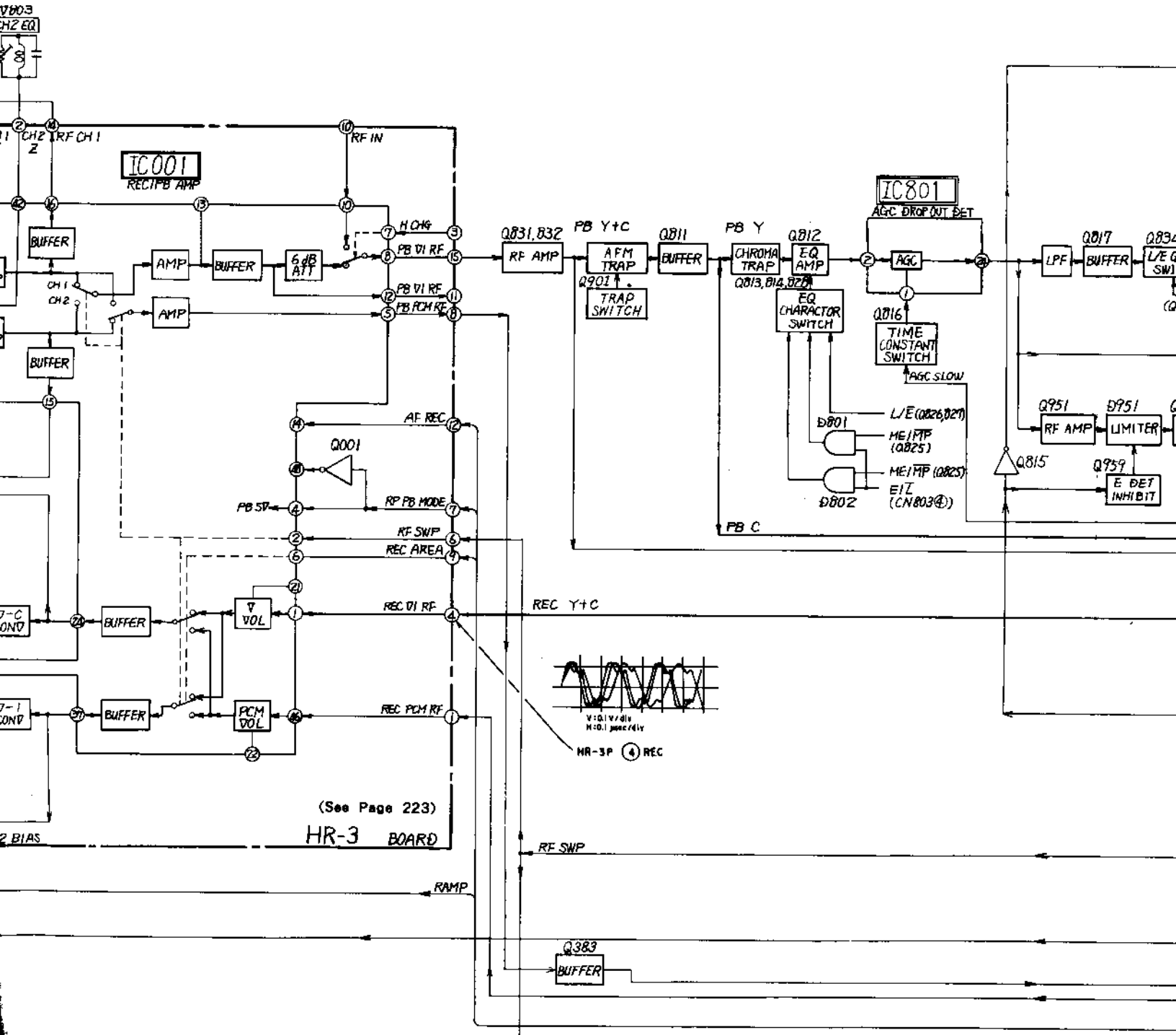
IC001
REC/PB AMP
RF IN
RF CH 1
CH 2
BUFFER
AMP
6dB ATT
H CHG
PB YI RF
PB PCM RF
CH 1
CH 2
AF REC
Q001
PB 5V
RP PB MODE
RF SWP
REC AREA
REC YI RF
REC PCM RF
V VOL
PCM VOL
REC Y+C
V:0.1V/div
H:0.1 μsec/div
MR-3P ④ REC
(See Page 223)
HR-3 BOARD
RF SWP
RAMP
Q383
BUFFER
Q831,832
RF AMP
PB Y+C
AFM TRAP
Q901
TRAP SWITCH
Q811
BUFFER
PB Y
CHROMA TRAP
Q813, 814, 828
Q812
EQ AMP
EQ CHARACTOR SWITCH
IC801
AGC DROP OUT DET
AGC
Q816
TIME CONSTANT SWITCH
AGC SLOW
D801
D802
L/E (Q826,827)
ME/MP (Q825)
ME/MP (Q825)
EIZ (CN803④)
PB C
Q815
LPF
Q817
BUFFER
Q951
RF AMP
D951
LIMITER
Q959
E DET INHIBIT

3-7. VIDEO (2) BLOCK DIAGRAM

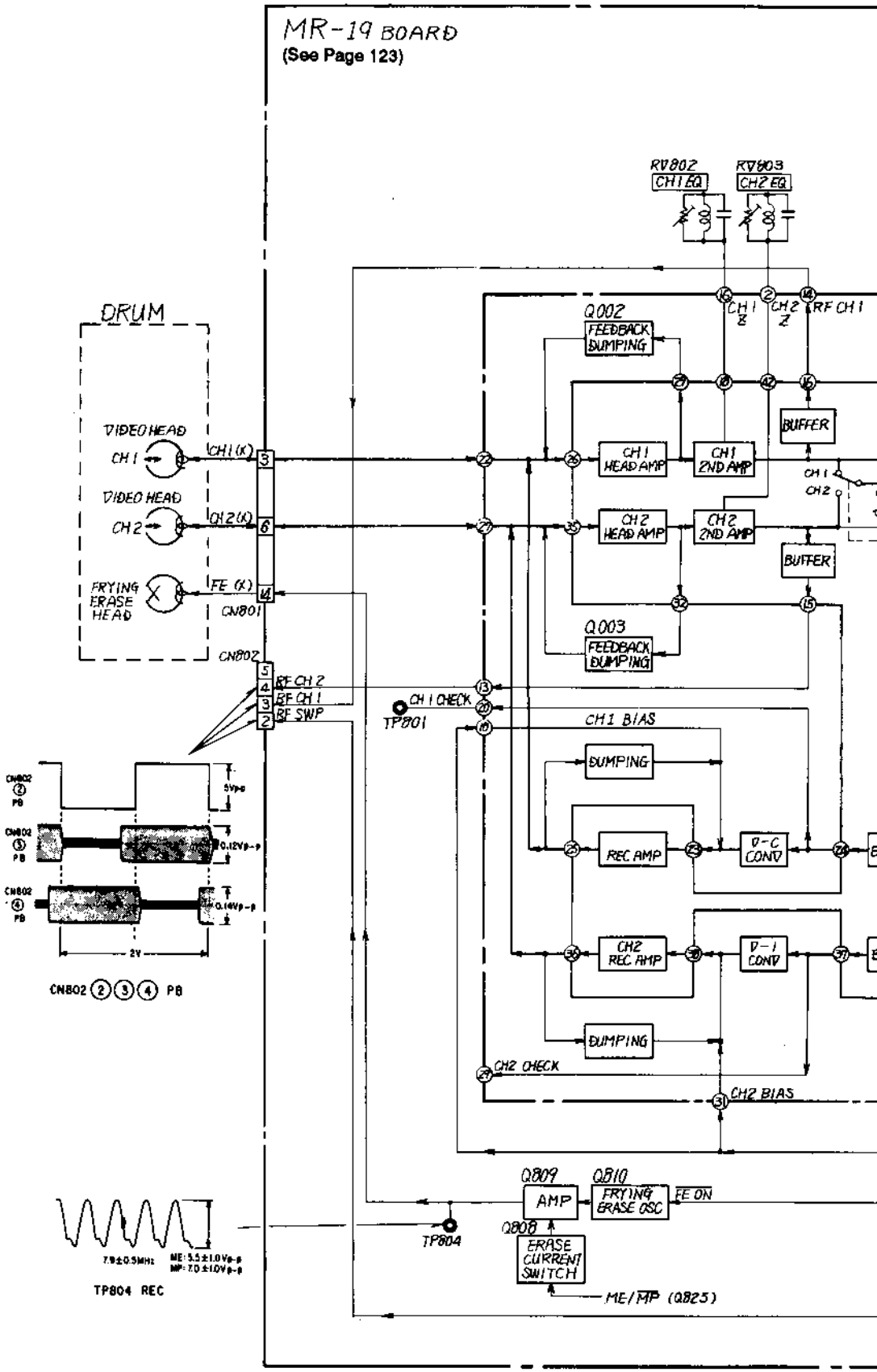

3-8. DEGITAL PICTURE BLOCK DIAGRAM

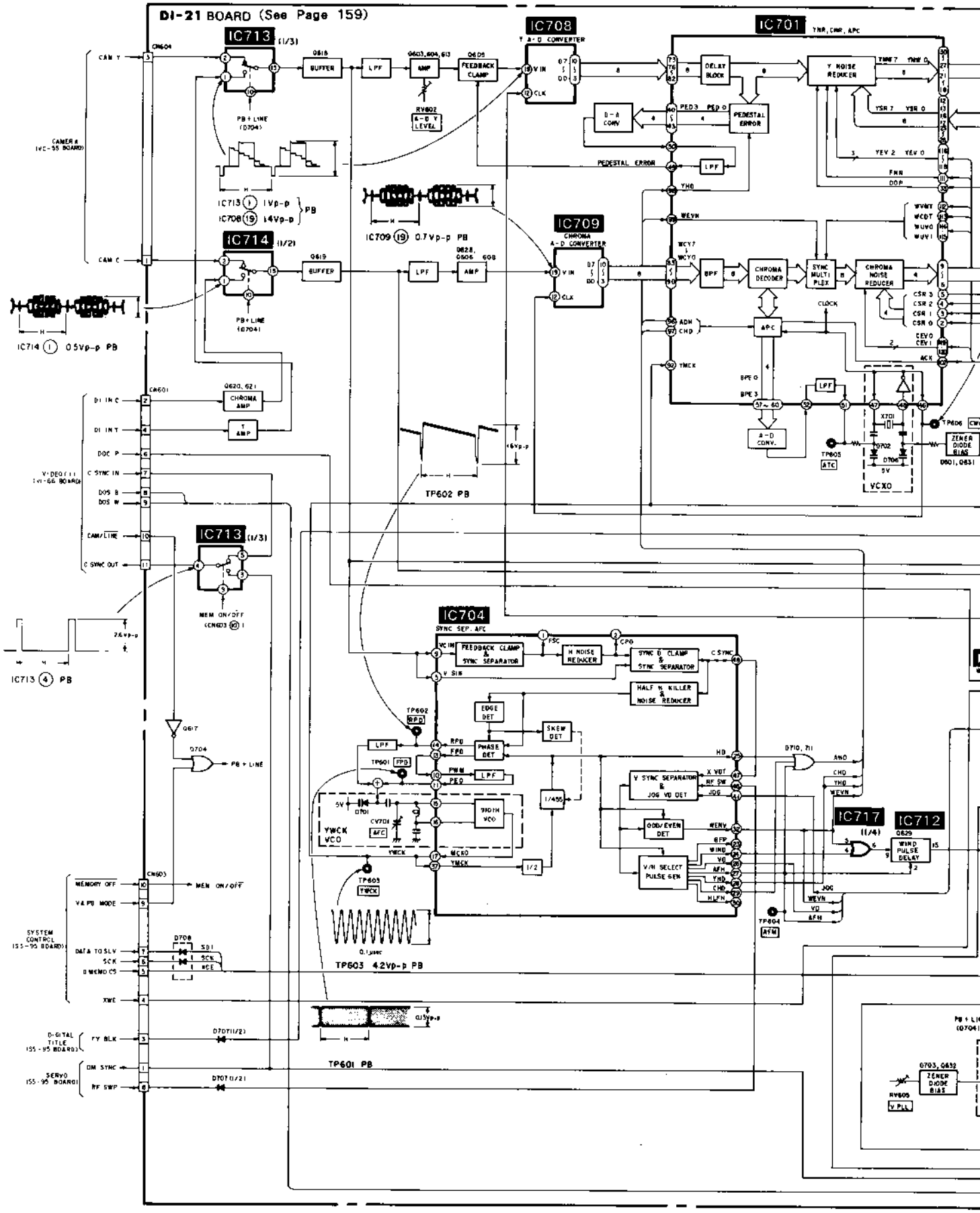

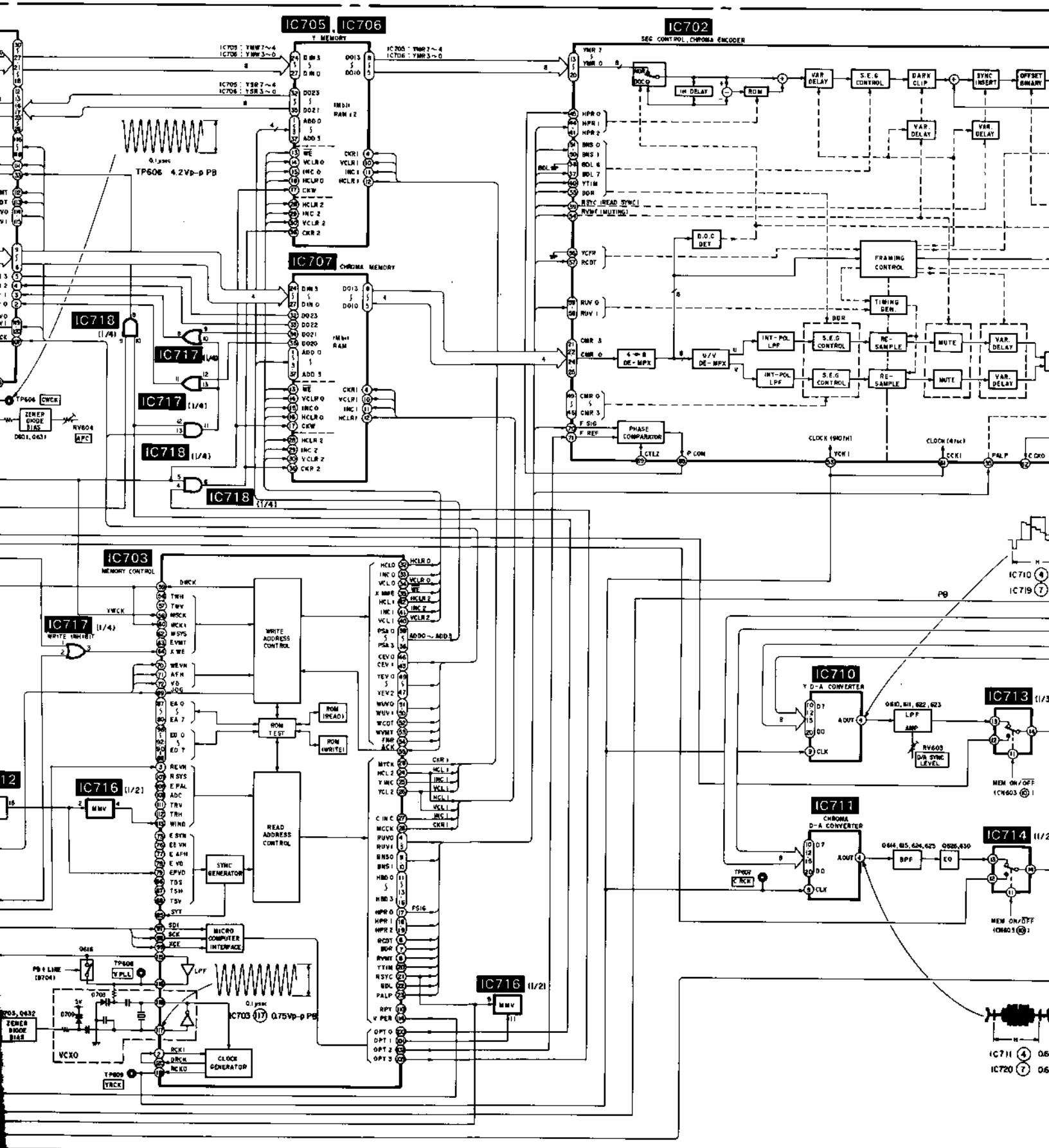
IC705 IC706
Y MEMORY
IC707
CHROMA MEMORY
IC702
SEG CONTROL, CHROMA ENCODER
IC703
MEMORY CONTROL
IC710
Y D-A CONVERTER
IC711
CHROMA D-A CONVERTER
IC713
IC714
IC716 (1/2)
IC717 (1/4)
IC718 (1/4)
TP606 4.2Vp-p PB
IC703 117 0.75Vp-p PB
WRITE ADDRESS CONTROL
READ ADDRESS CONTROL
SYNC GENERATOR
MICRO COMPUTER INTERFACE
CLOCK GENERATOR
ROM TEST
VCXO
PHASE COMPARATOR
FRAMING CONTROL
TIMING GEN.
LPF
BPF
MEM ON/OFF

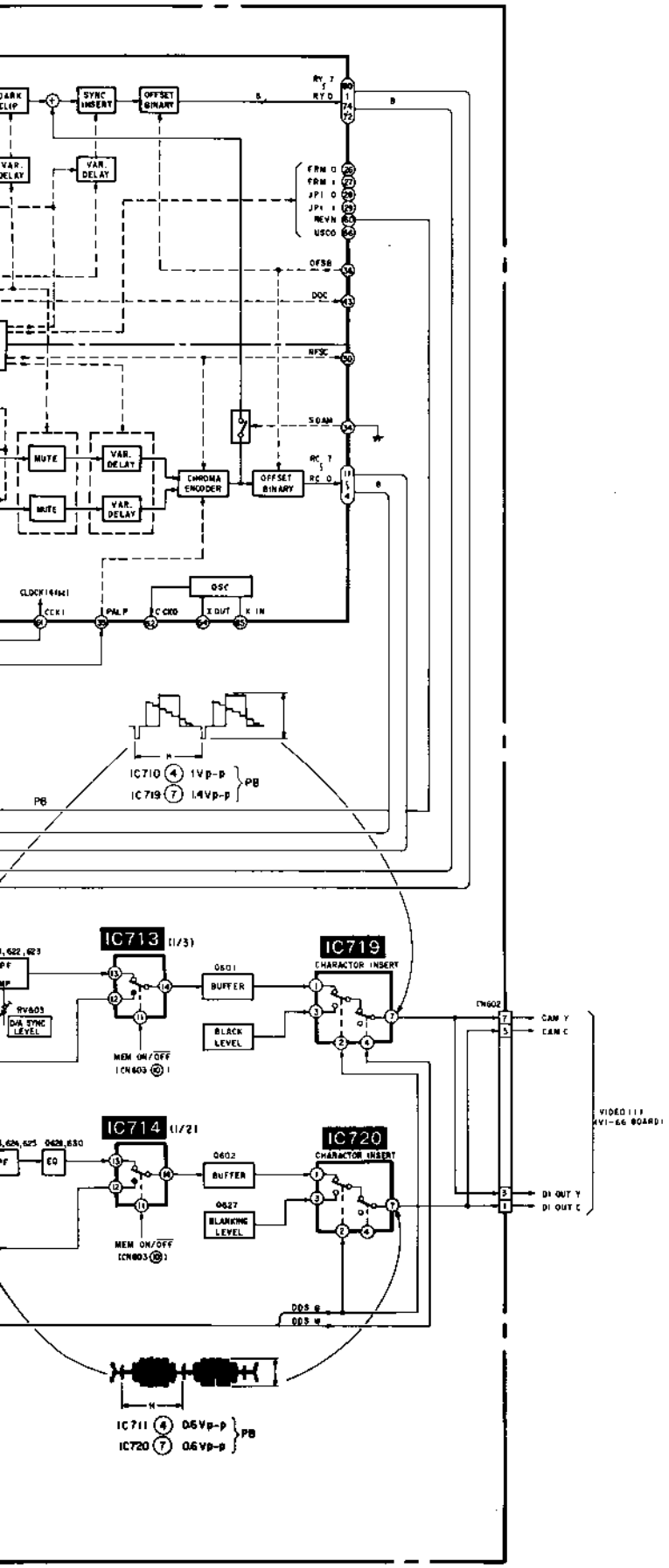
SYNC INSERT
OFFSET BINARY
VAR. DELAY
MUTE
CHROMA ENCODER
OSC
IC710 4 1Vp-p
IC719 7 1.4Vp-p
PB
IC713 (1/3)
IC719
CHARACTOR INSERT
BUFFER
BLACK LEVEL
IC714 (1/2)
IC720
BLANKING LEVEL
IC711 4 0.6Vp-p
IC720 7 0.6Vp-p

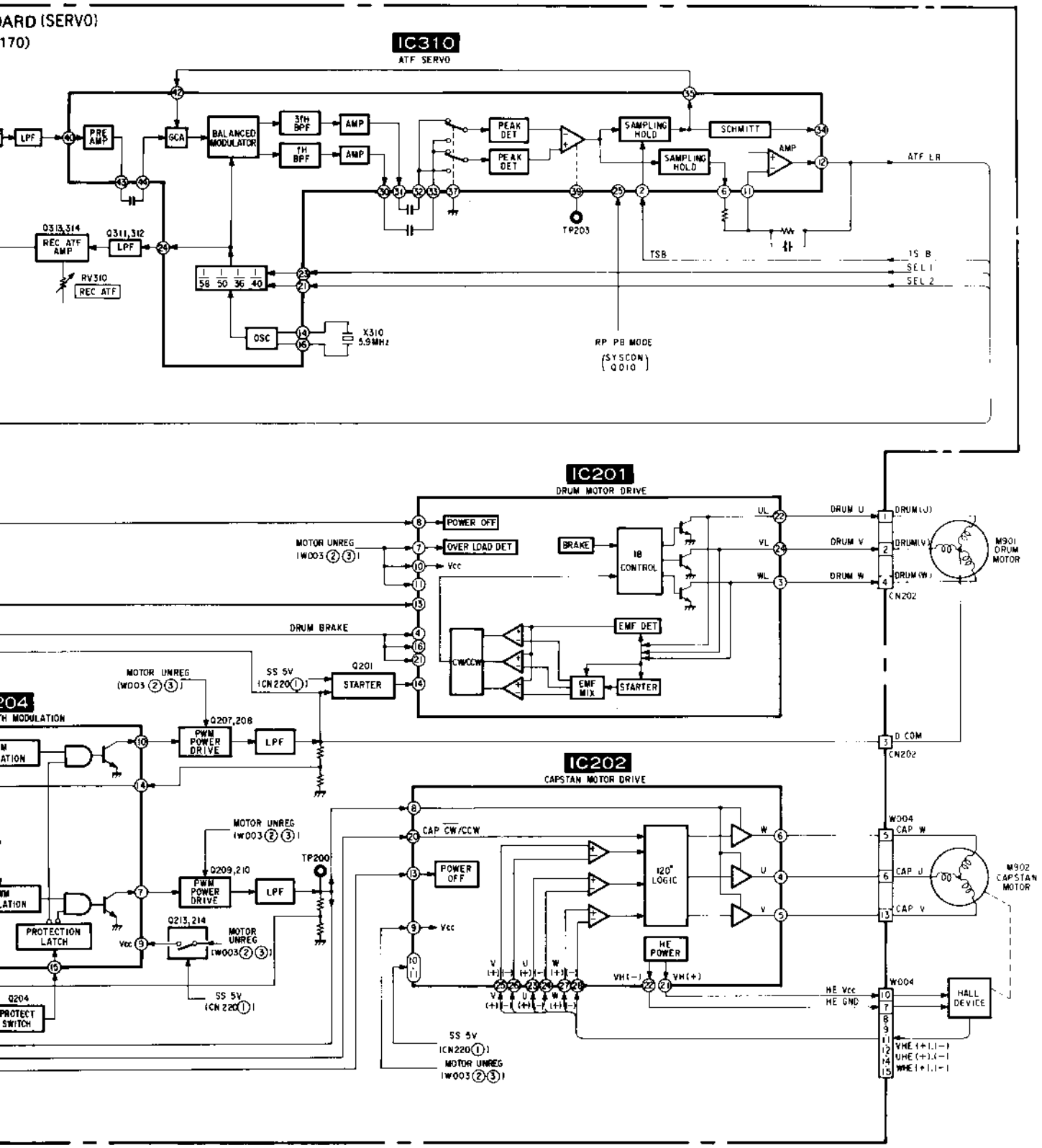
ARD (SERVO)
170)
IC310
ATF SERVO
LPF
PRE AMP
GCA
BALANCED MODULATOR
3FH BPF
1H BPF
AMP
AMP
PEAK DET
PEAK DET
SAMPLING HOLD
SCHMITT
SAMPLING HOLD
AMP
ATF LR
TP203
Q313,314
REC ATF AMP
Q311,312
LPF
RV310
REC ATF
58 50 36 40
OSC
X310
5.9MHz
TSB
SEL B
SEL 1
SEL 2
RP PB MODE
(SYSCON Q010)
IC201
DRUM MOTOR DRIVE
POWER OFF
OVER LOAD DET
Vcc
BRAKE
IB CONTROL
UL
VL
WL
DRUM U
DRUM V
DRUM W
DRUM(U)
DRUM(V)
DRUM(W)
M901 DRUM MOTOR
CN202
MOTOR UNREG (W003 2 3)
DRUM BRAKE
EMF DET
CW/CCW
EMF MIX
STARTER
5S 5V (CN220 1)
Q201
STARTER
D COM
CN202
204
H MODULATION
Q207,208
PWM POWER DRIVE
LPF
IC202
CAPSTAN MOTOR DRIVE
MOTOR UNREG (W003 2 3)
CAP CW/CCW
POWER OFF
Vcc
120° LOGIC
W
U
V
HE POWER
VH(-)
VH(+)
W004
CAP W
CAP U
CAP V
M902 CAPSTAN MOTOR
TP200
Q209,210
PWM POWER DRIVE
LPF
PROTECTION LATCH
Q213,214
MOTOR UNREG (W003 2 3)
Vcc
5S 5V (CN220 1)
Q204
PROTECT SWITCH
HE Vcc
HE GND
HALL DEVICE
VHE(+)
VHE(-)
WHE(+)
WHE(-)
5S 5V (CN220 1)
MOTOR UNREG (W003 2 3)

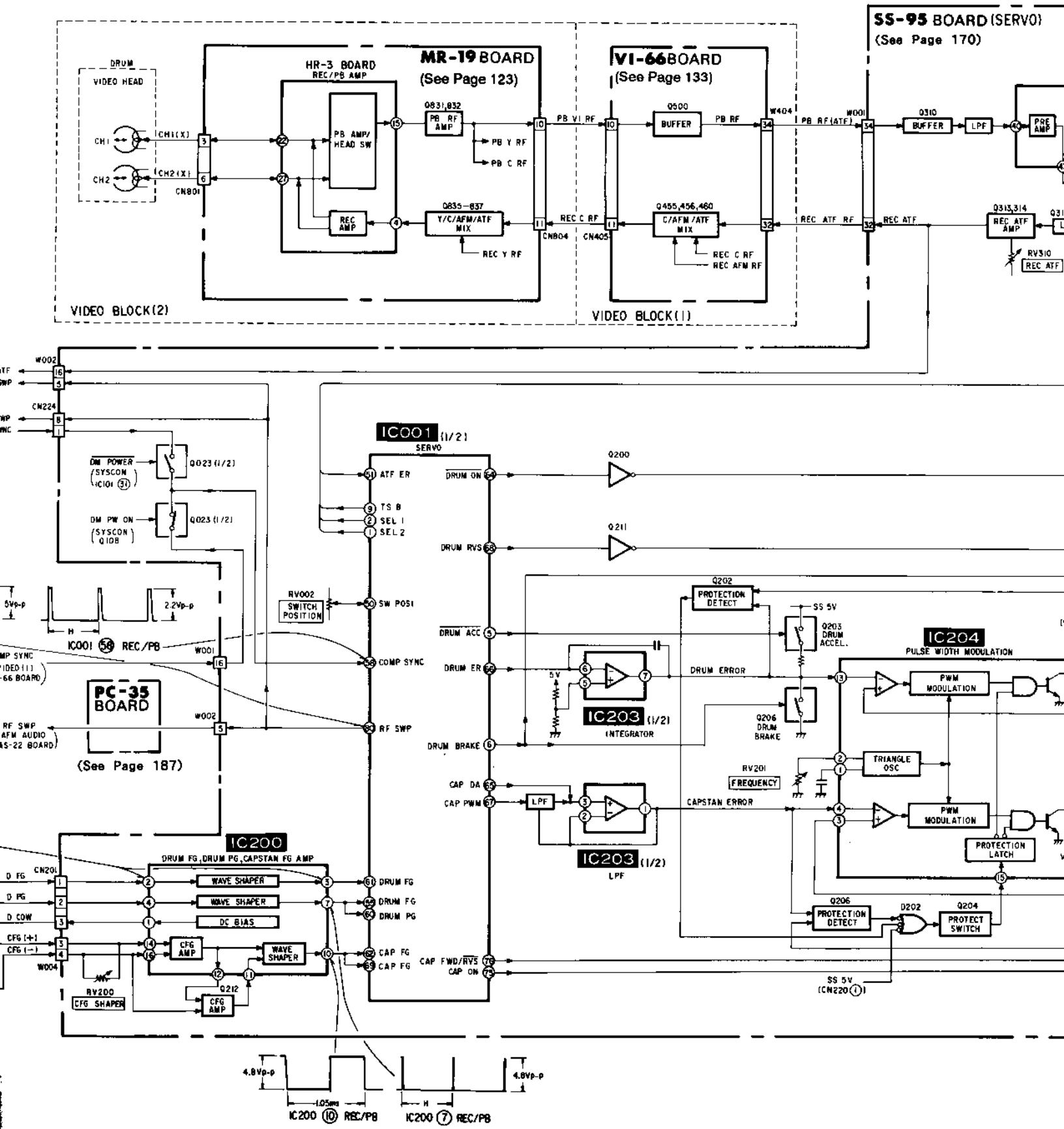
SS-95 BOARD (SERVO)
(See Page 170)
DRUM
VIDEO HEAD
CH1
CH2
CH1(X)
CH2(X)
CN801
HR-3 BOARD
REC/PB AMP
PB AMP/ HEAD SW
REC AMP
MR-19 BOARD
(See Page 123)
Q831,832
PB RF AMP
Q835~837
Y/C/AFM/ATF MIX
REC Y RF
PB Y RF
PB C RF
PB VI RF
REC C RF
CN804
VI-66 BOARD
(See Page 133)
Q500
BUFFER
PB RF
W404
Q455,456,460
C/AFM/ATF MIX
REC C RF
REC AFM RF
CN405
W001
PB RF(ATF)
REC ATF RF
Q310
BUFFER
LPF
PRE AMP
REC ATF
Q313,314
REC ATF AMP
RV310
REC ATF
VIDEO BLOCK(2)
VIDEO BLOCK(1)
W002
CN224
DM POWER (SYSCON IC101 (31))
Q023 (1/2)
DM PW ON (SYSCON Q108)
IC001 (1/2)
SERVO
ATF ER
TS B
SEL 1
SEL 2
SW POSI
COMP SYNC
RF SWP
DRUM FG
DRUM PG
CAP FG
CAP FWD/RVS
CAP ON
DRUM ON
DRUM RVS
DRUM ACC
DRUM ER
DRUM BRAKE
CAP DA
CAP PWM
Q200
Q211
RV002
SWITCH POSITION
IC001 (58) REC/PB
PC-35 BOARD
(See Page 187)
Q202
PROTECTION DETECT
SS 5V
Q203
DRUM ACCEL.
IC204
PULSE WIDTH MODULATION
DRUM ERROR
IC203 (1/2)
INTEGRATOR
Q206
DRUM BRAKE
RV201
FREQUENCY
TRIANGLE OSC
CAPSTAN ERROR
PWM MODULATION
PROTECTION LATCH
IC203 (1/2)
LPF
Q206
PROTECTION DETECT
D202
Q204
PROTECT SWITCH
SS 5V (CN220 (1))
IC200
DRUM FG, DRUM PG, CAPSTAN FG AMP
CN201
D FG
D PG
D COM
CFG (+)
CFG (-)
W004
WAVE SHAPER
DC BIAS
CFG AMP
RV200
CFG SHAPER
Q212
2.2Vp-p
5Vp-p
H
4.8Vp-p
1.05ms
IC200 (10) REC/PB
IC200 (7) REC/PB

3-9. SERVO BLOCK DIAGRAM

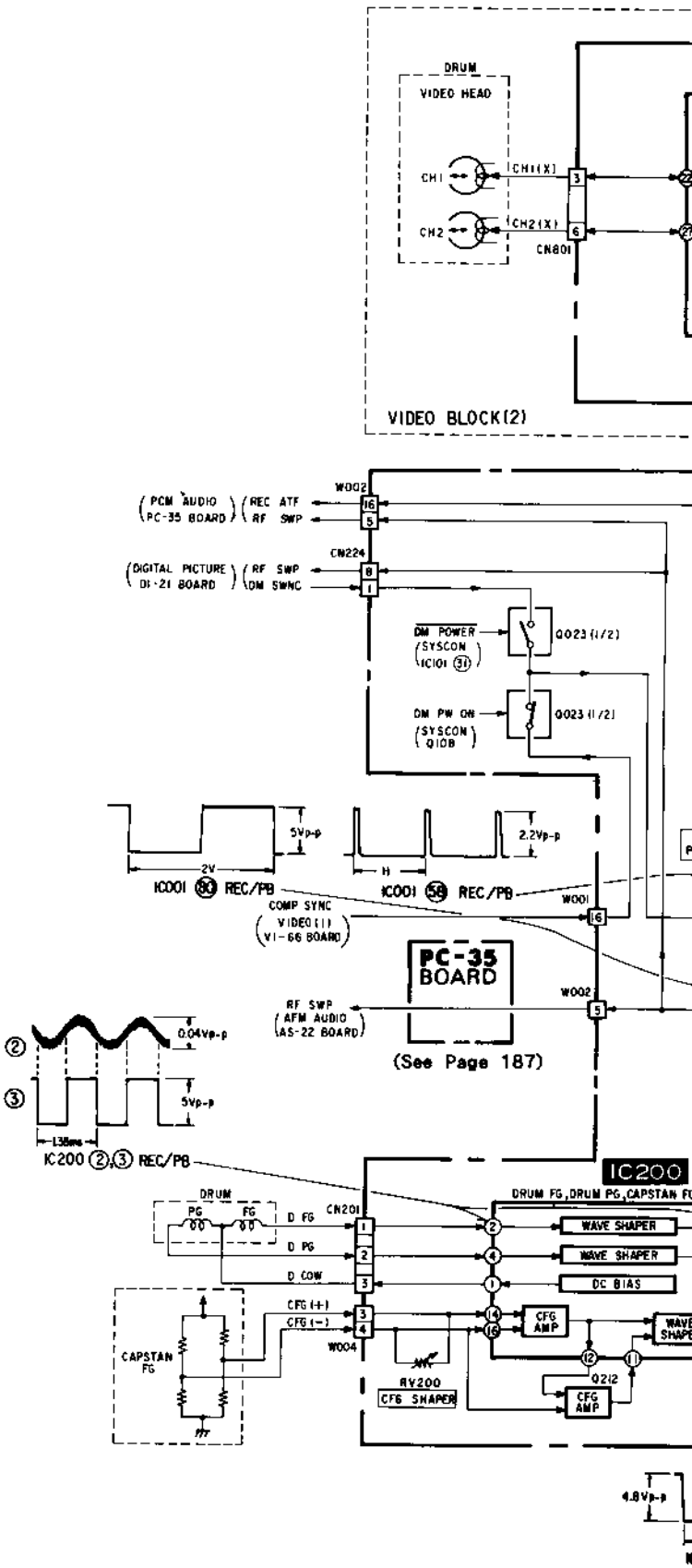

3-10. SYSTEM CONTROL BLOCK DIAGRAM

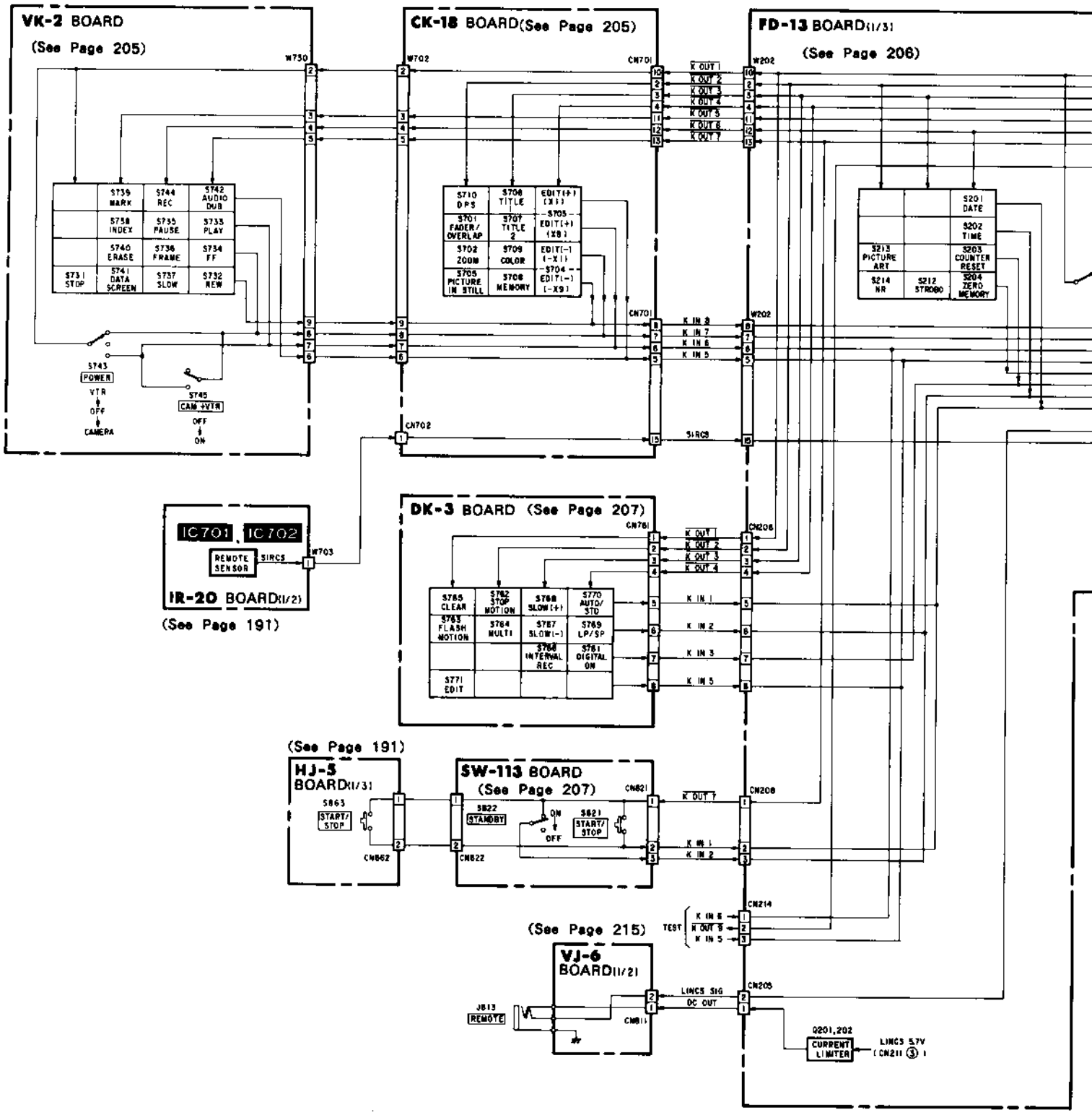

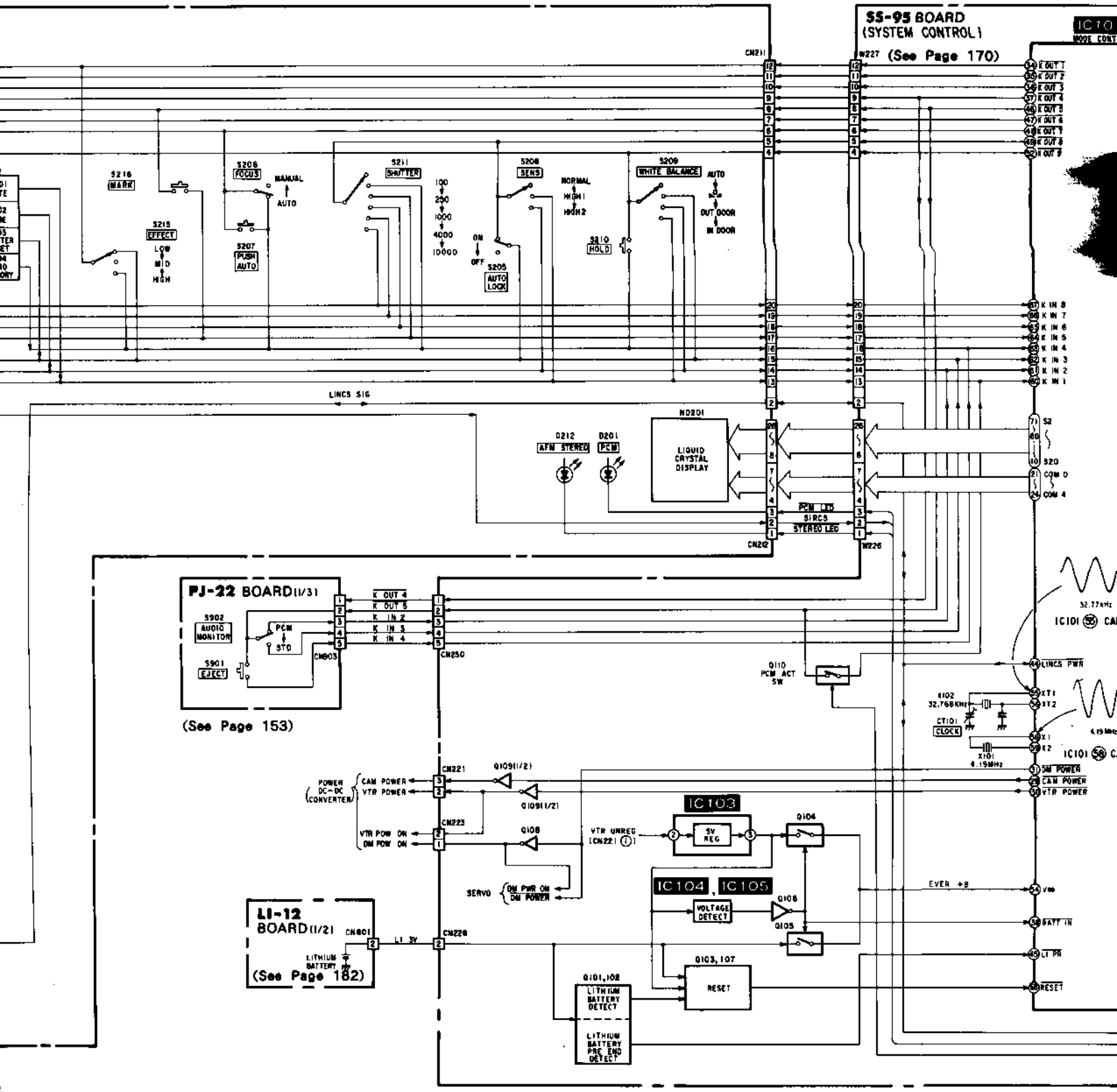
S5-95 BOARD
(SYSTEM CONTROL)
(See Page 170)
CN211
W227
S216 MARK
S215 EFFECT LOW MID HIGH
S208 FOCUS MANUAL AUTO
S207 PUSH AUTO
S211 SHUTTER 100 250 1000 4000 10000
S206 SENS NORMAL HIGH1 HIGH2
S205 AUTO LOCK ON OFF
S210 HOLD
S209 WHITE BALANCE AUTO OUT DOOR IN DOOR
LINCS SIG
ND201 LIQUID CRYSTAL DISPLAY
D212 AFM STEREO
D201 PCM
PCM LED
SIRCS
STEREO LED
CN212
W226
PJ-22 BOARD(1/3)
S902 AUDIO MONITOR
PCM
STD
S901 EJECT
CN803
K OUT 4
K OUT 5
K IN 2
K IN 3
K IN 4
CN250
(See Page 153)
Q110 PCM ACT SW
X102 32.768KHz
CT101 CLOCK
X101 4.19MHz
LINCS PWR
XT1
XT2
XI
XO
SW POWER
CAM POWER
VTR POWER
IC101
POWER DC-DC CONVERTER
CAM POWER
VTR POWER
CN221
Q109(1/2)
VTR POW ON
DM POW ON
CN223
Q108
VTR UNREG (CN221 ①)
IC103
5V REG
Q104
SERVO
DM PWR ON
DM POWER
IC104 , IC105
VOLTAGE DETECT
Q106
Q105
EVER +B
Vss
BATT IN
LI PR
RESET
LI-12 BOARD(1/2)
CN801
LI 3V
CN228
LITHIUM BATTERY
(See Page 182)
Q103, 107
RESET
Q101, 102
LITHIUM BATTERY DETECT
LITHIUM BATTERY PRE END DETECT

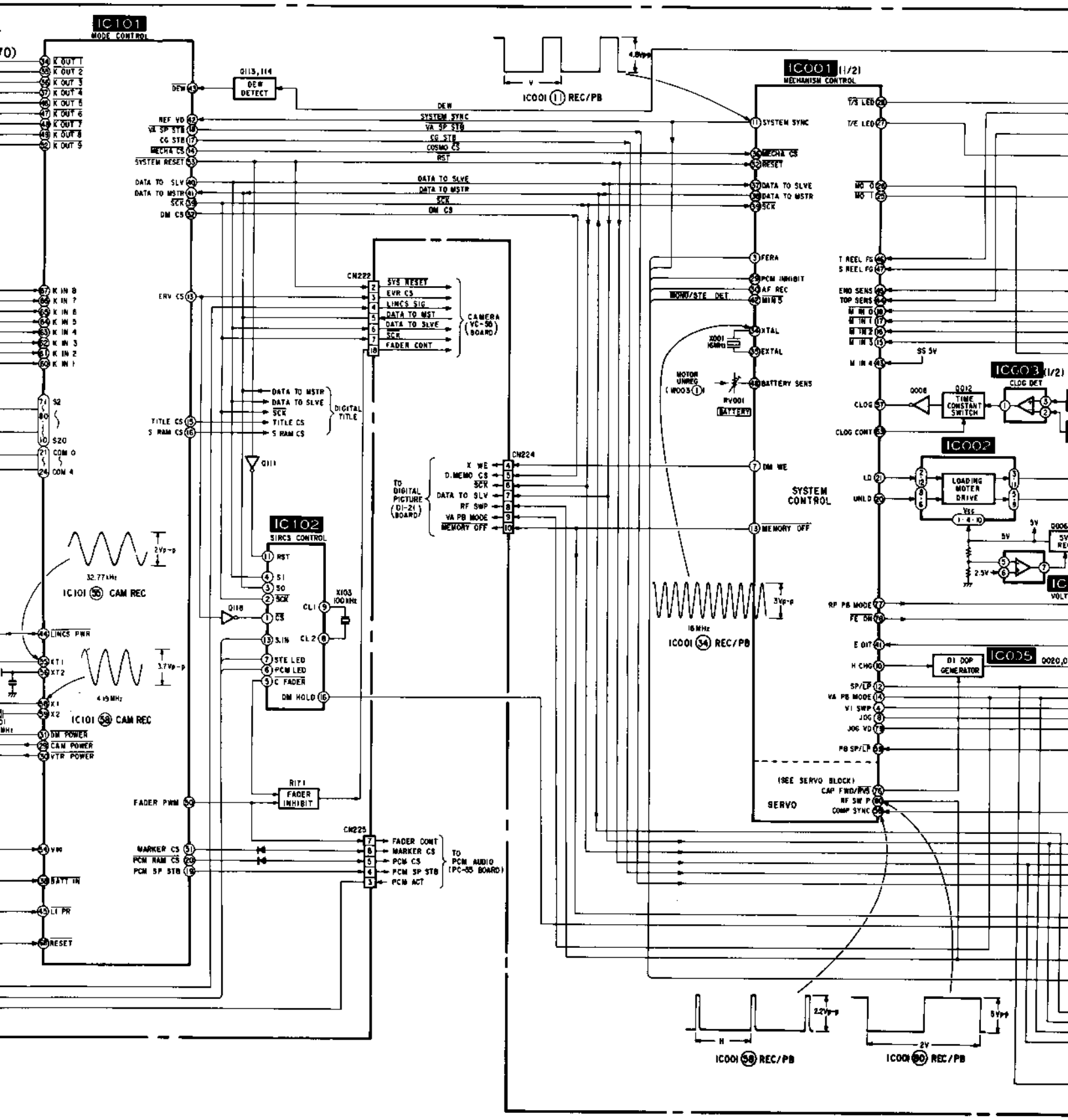
IC101
MODE CONTROL
IC001 (1/2)
MECHANISM CONTROL
IC002
IC003 (1/2)
IC005
IC102
SIRCS CONTROL
SYSTEM CONTROL
SERVO
CN222
CN224
CN225
CAMERA (VC-56 BOARD)
DIGITAL TITLE
TO DIGITAL PICTURE (DI-21 BOARD)
TO PCM AUDIO (PC-65 BOARD)
FADER INHIBIT
LOADING MOTER DRIVE
TIME CONSTANT SWITCH
DI DOP GENERATOR
IC001 (1) REC/PB
IC001 (34) REC/PB
IC001 (58) REC/PB
IC001 (60) REC/PB
IC101 (56) CAM REC
IC101 (58) CAM REC

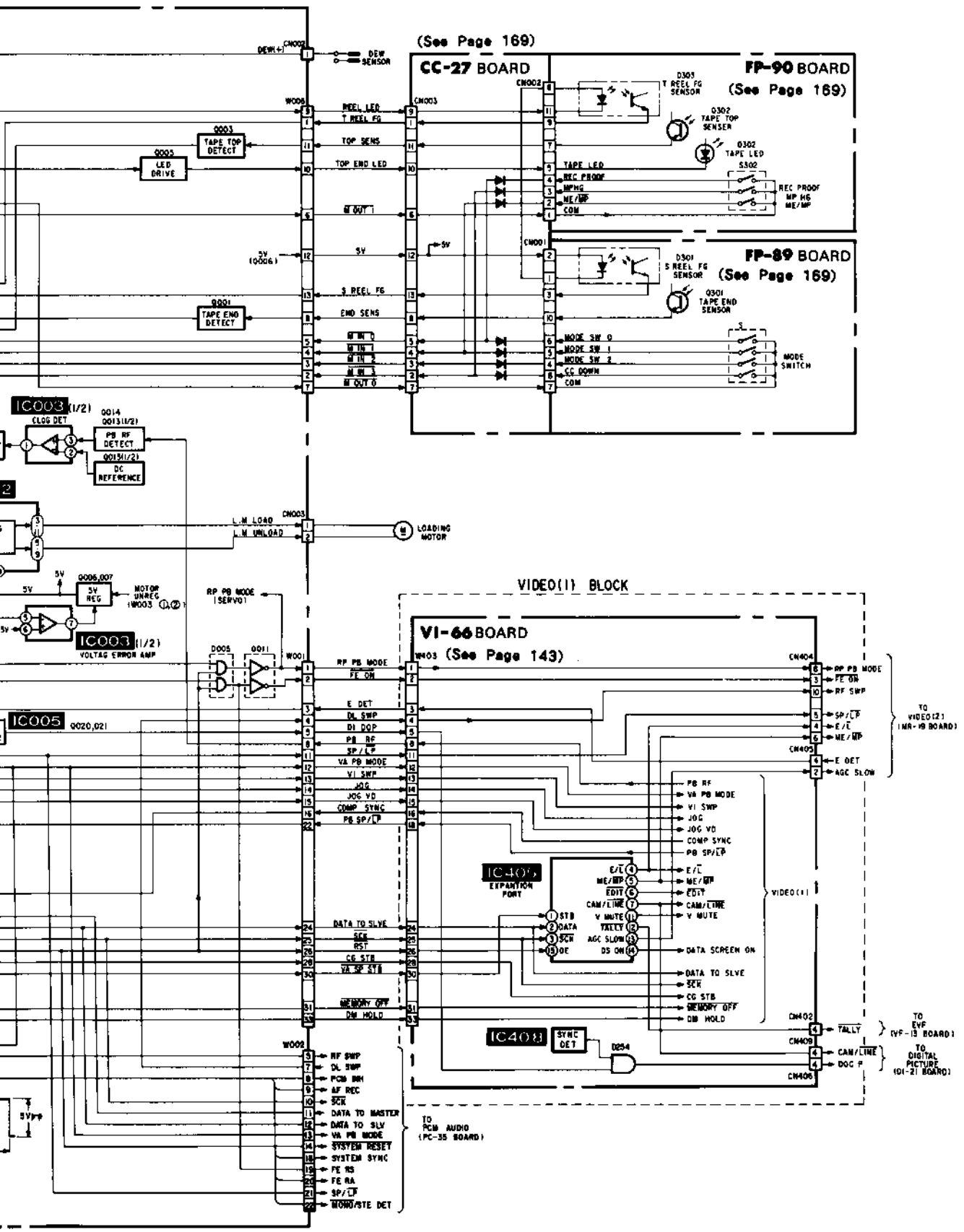
(See Page 169)
CC-27 BOARD
FP-90 BOARD
(See Page 169)
FP-89 BOARD
(See Page 169)
DEW SENSOR
REEL LED
T REEL FG
TOP SENS
TOP END LED
M OUT
5V
S REEL FG
END SENS
M IN 0
M IN 1
M IN 2
M IN 3
M OUT 0
TAPE TOP DETECT
LED DRIVE
TAPE END DETECT
D301 T REEL FG SENSOR
D302 TAPE TOP SENSER
D302 TAPE LED
S302
TAPE LED
REC PROOF
MPHG
ME/MP
COM
REC PROOF
MP HG
ME/MP
D301 S REEL FG SENSOR
D301 TAPE END SENSOR
MODE SW 0
MODE SW 1
MODE SW 2
CC DOWN
COM
MODE SWITCH
IC003 (1/2)
CLOG DET
PB RF DETECT
DC REFERENCE
L.M LOAD
L.M UNLOAD
LOADING MOTOR
5V REG
MOTOR UNREG
VOLTAG ERROR AMP
RP PB MODE (SERVO)
VIDEO(1) BLOCK
VI-66 BOARD
(See Page 143)
RP PB MODE
FE ON
E DET
DL SWP
DI DOP
PB RF
SP/LP
VA PB MODE
VI SWP
JOG
JOG VD
COMP SYNC
PB SP/LP
DATA TO SLVE
SCK
RST
CG STB
VA SP STB
MEMORY OFF
DM HOLD
IC005
IC401
EXPANTION PORT
STB
DATA
SCK
OE
E/E
ME/MP
EDIT
CAM/LINE
V MUTE
TALLY
AGC SLOW
DS ON
DATA SCREEN ON
IC403
SYNC DET
D254
VIDEO(1)
CN404
CN405
CN402
CN409
CN406
TO VIDEO(2) (MR-V8 BOARD)
TO EVF (VF-13 BOARD)
TO DIGITAL PICTURE (DI-21 BOARD)
W003
RF SWP
DL SWP
PCM BIM
AF REC
SCK
DATA TO MASTER
DATA TO SLV
VA PB MODE
SYSTEM RESET
SYSTEM SYNC
FE RS
FE RA
SP/LP
MONO/STE DET
TO PCM AUDIO (PC-35 BOARD)

3-12. PCM AUDIO BLOCK DIAGRAM

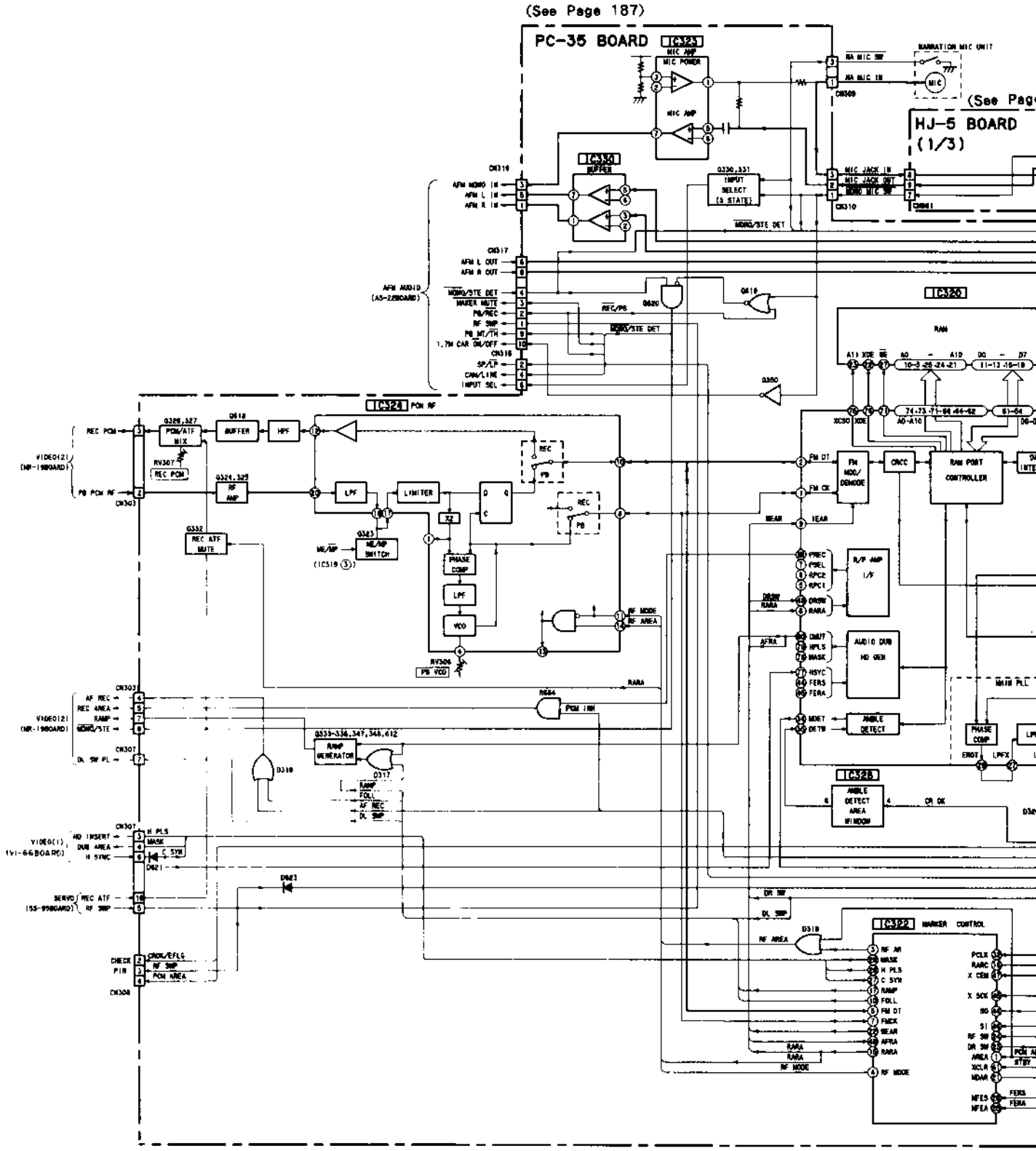

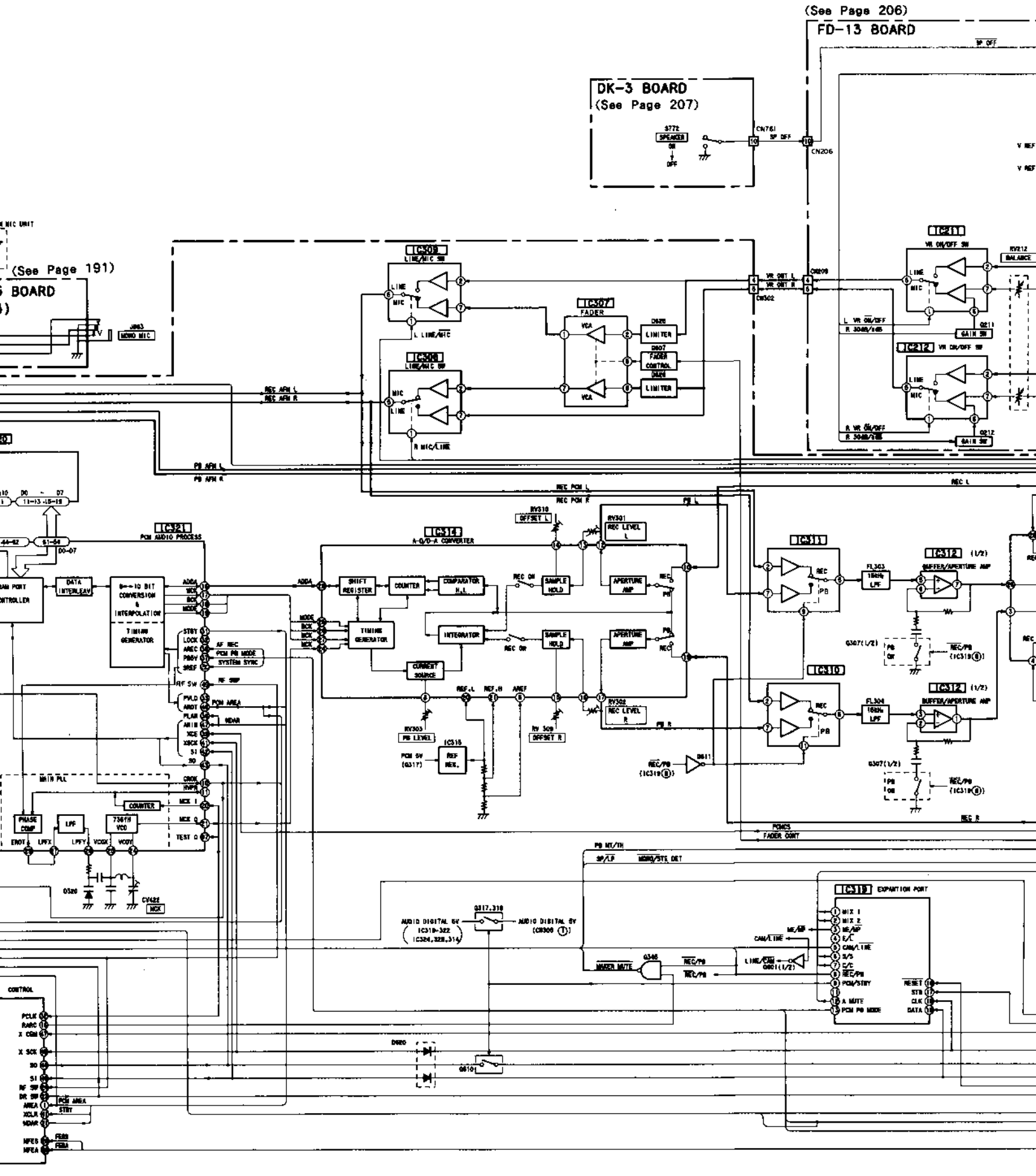
(See Page 206)
FD-13 BOARD
DK-3 BOARD
(See Page 207)
(See Page 191)
BOARD
IC309
LINE/MIC SW
IC308
LINE/MIC SW
IC307
FADER
IC211
IC212
IC321
PCM AUDIO PROCESS
IC314
A-D/D-A CONVERTER
IC311
IC312
IC310
IC319
EXPANTION PORT
SHIFT REGISTER
COUNTER
COMPARATOR H.L
SAMPLE HOLD
APERTURE AMP
TIMING GENERATOR
INTEGRATOR
CURRENT SOURCE
REC LEVEL L
REC LEVEL R
BUFFER/APERTURE AMP
DATA INTERLEAV
TIMING GENERATOR
PHASE COMP
LPF
MAIN PLL
CONTROL
MAKER MUTE
AUDIO DIGITAL 5V
REC/PB
REC L
REC R
PB L
PB R
REC PCM L
REC PCM R
PB AFM L
PB AFM R
REC AFM L
REC AFM R
PCMCS
FADER CONT
PB MT/TH
SP/LP
MONO/STE DET
PCM AREA
STBY
FEBA
MFES
MFEA

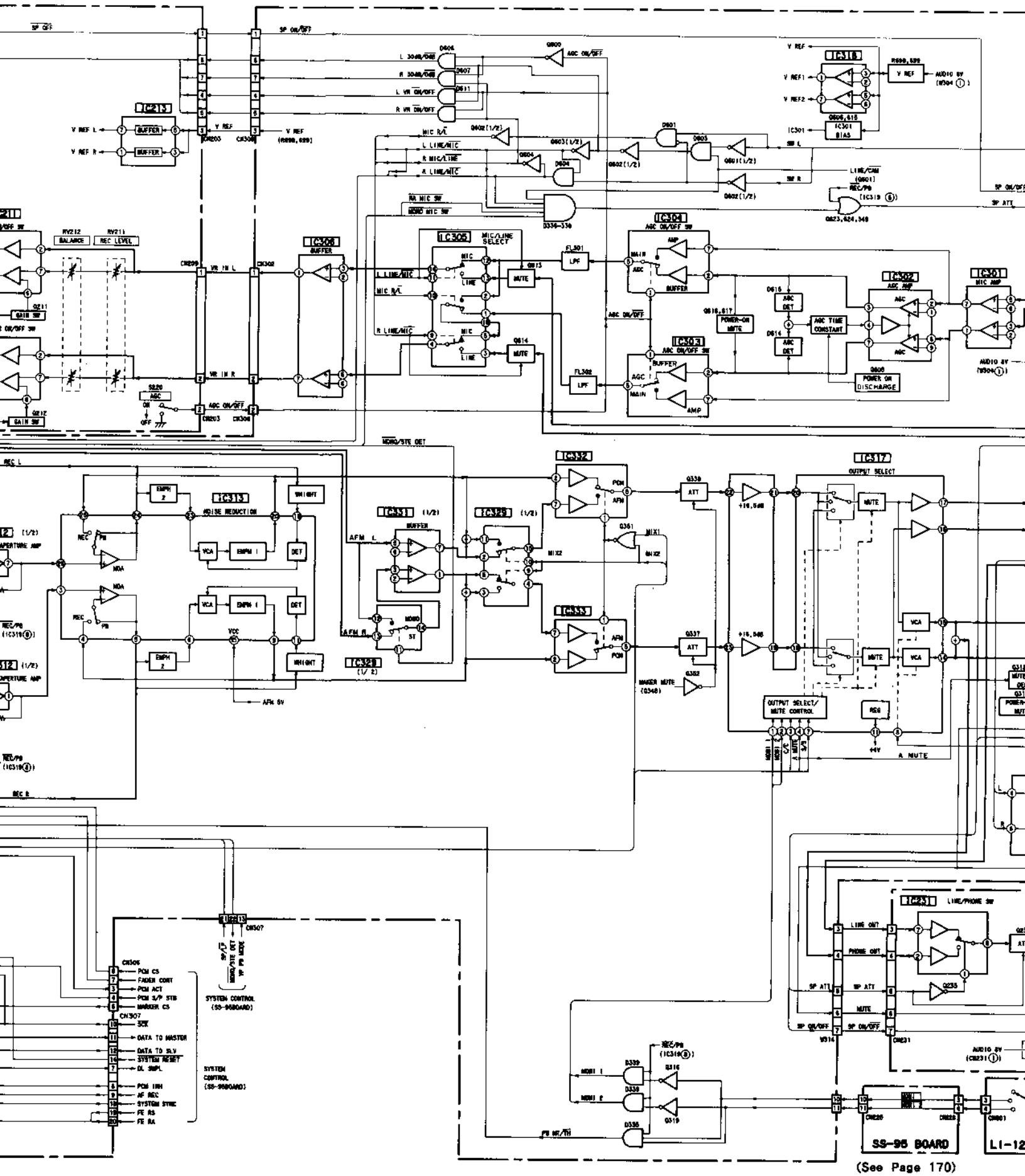
SS-96 BOARD
(See Page 170)

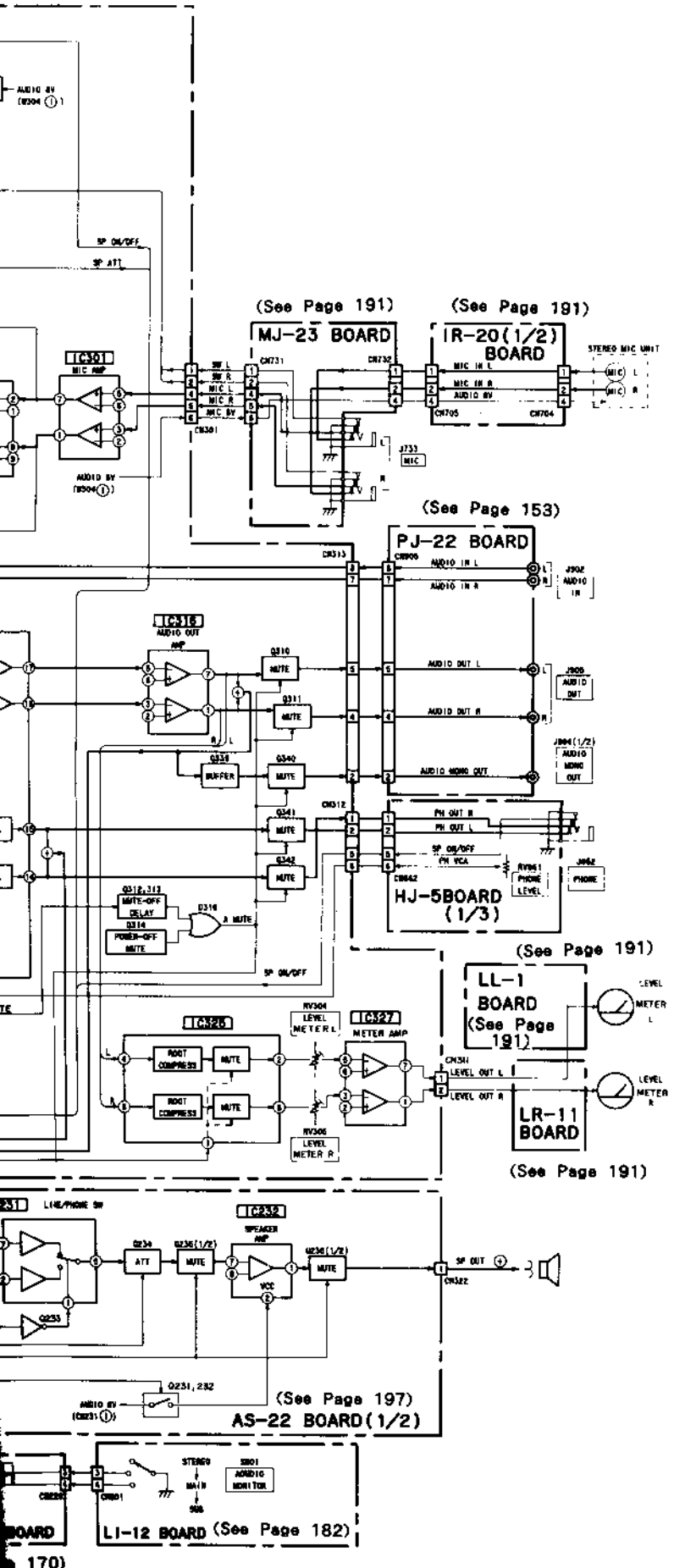
(See Page 191)
MJ-23 BOARD
(See Page 191)
IR-20(1/2) BOARD
(See Page 153)
PJ-22 BOARD
HJ-5BOARD (1/3)
(See Page 191)
LL-1 BOARD (See Page 191)
LR-11 BOARD
(See Page 191)
(See Page 197)
AS-22 BOARD(1/2)
LI-12 BOARD (See Page 182)
170)

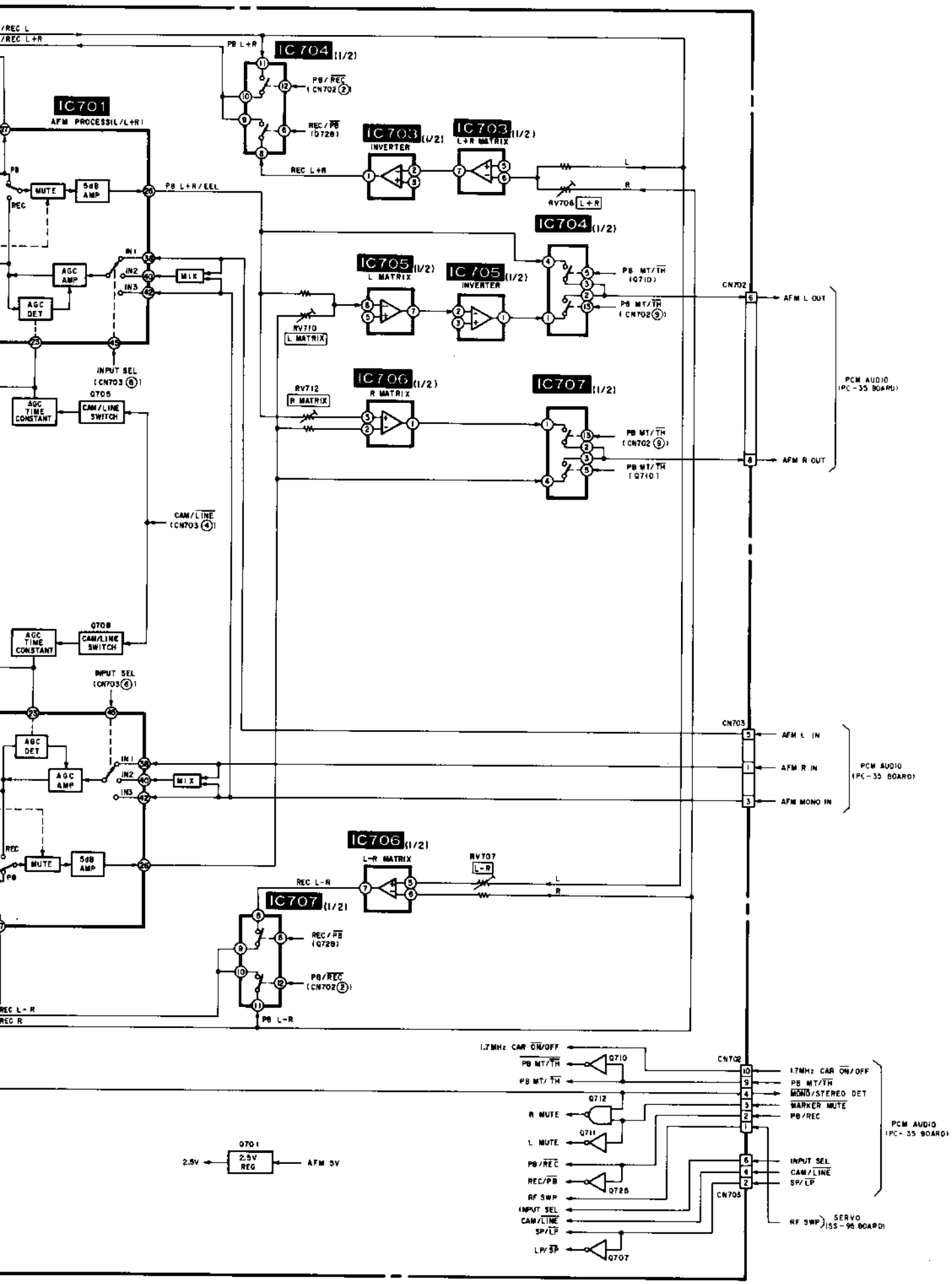
IC701
AFM PROCESS(L/L+R)
IC704 (1/2)
IC703 (1/2)
INVERTER
IC703 (1/2)
L+R MATRIX
IC704 (1/2)
IC705 (1/2)
L MATRIX
IC705 (1/2)
INVERTER
IC706 (1/2)
R MATRIX
IC707 (1/2)
IC706 (1/2)
L-R MATRIX
IC707 (1/2)
MUTE
5dB AMP
AGC AMP
AGC DET
MIX
AGC TIME CONSTANT
CAM/LINE SWITCH
INPUT SEL
PB L+R/EEL
REC L+R
REC L-R
PB L-R
RV706 L+R
RV710 L MATRIX
RV712 R MATRIX
RV707 L-R
CN702
CN703
AFM L OUT
AFM R OUT
PCM AUDIO (PC-35 BOARD)
AFM L IN
AFM R IN
AFM MONO IN
1.7MHz CAR ON/OFF
PB MT/TH
MONO/STEREO DET
MARKER MUTE
PB/REC
R MUTE
L MUTE
REC/PB
RF SWP
CAM/LINE
SP/LP
LP/SP
Q701
2.5V REG
2.5V
AFM 5V
SERVO (SS-95 BOARD)

3. AFM AUDIO BLOCK DIAGRAM

5-22 BOARD

(See Page 197)

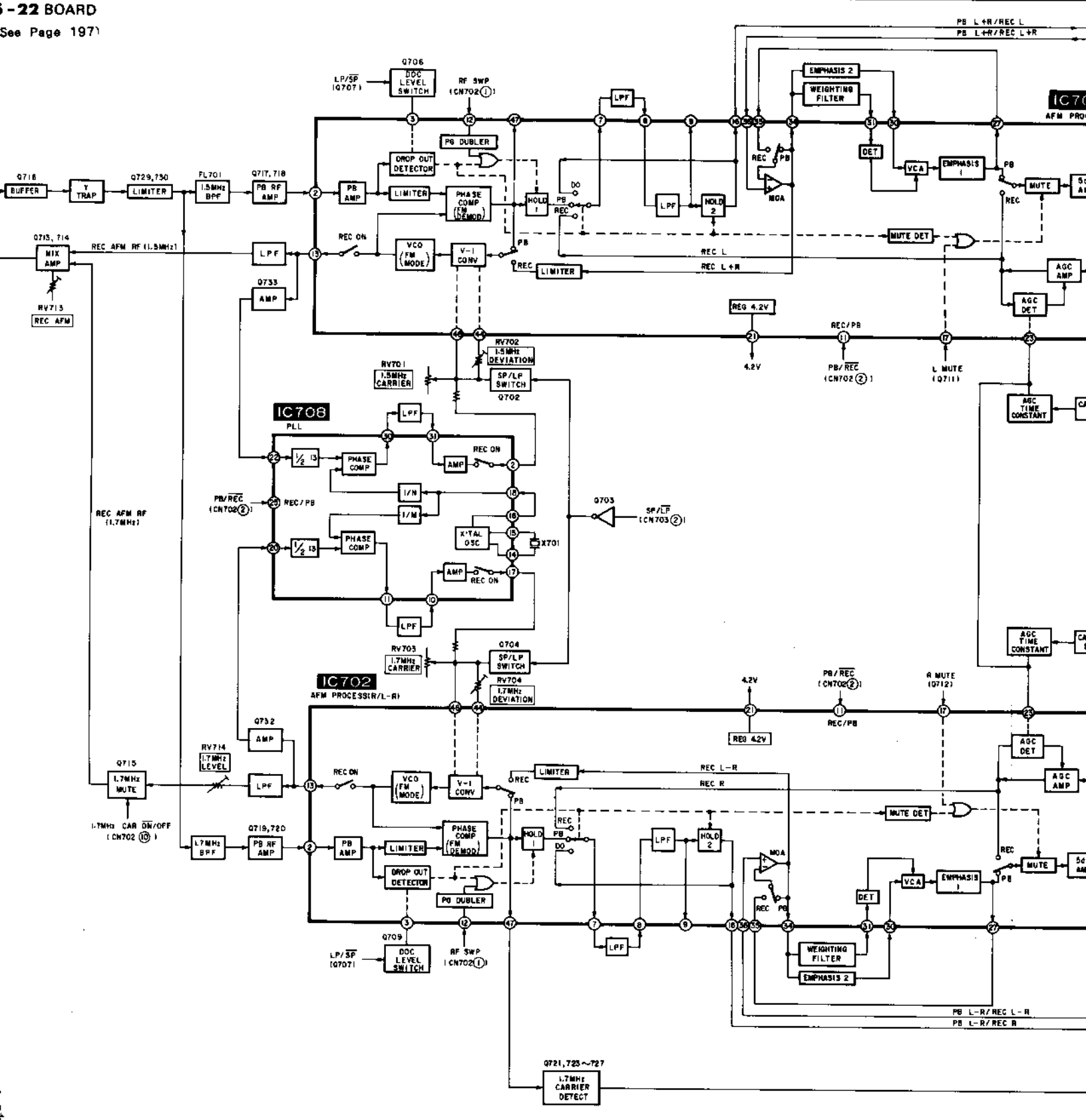

3-13. AFM AUDIO BLOCK DIAGRAM

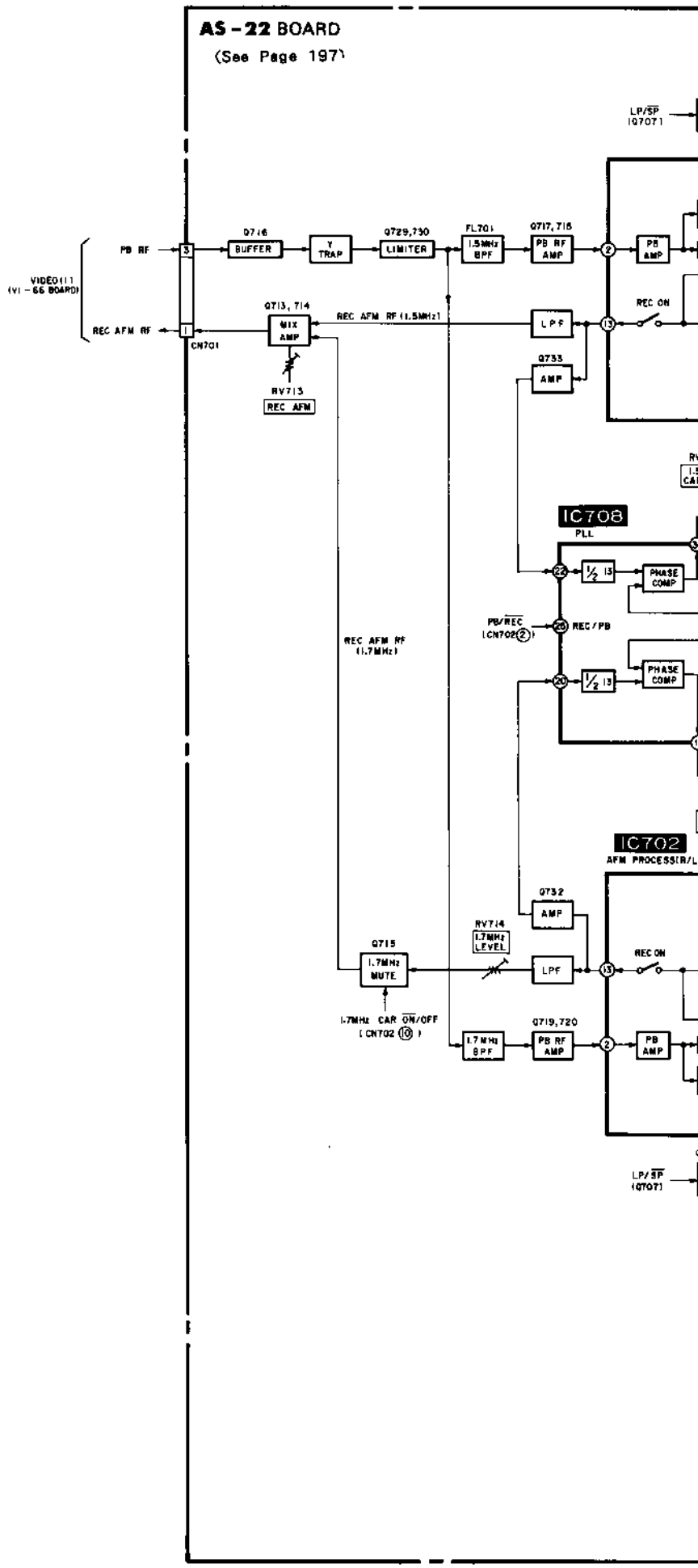

3-13. AFM AUDIO BLOCK DIAGRAM

AS-22 BOARD

(See Page 197)

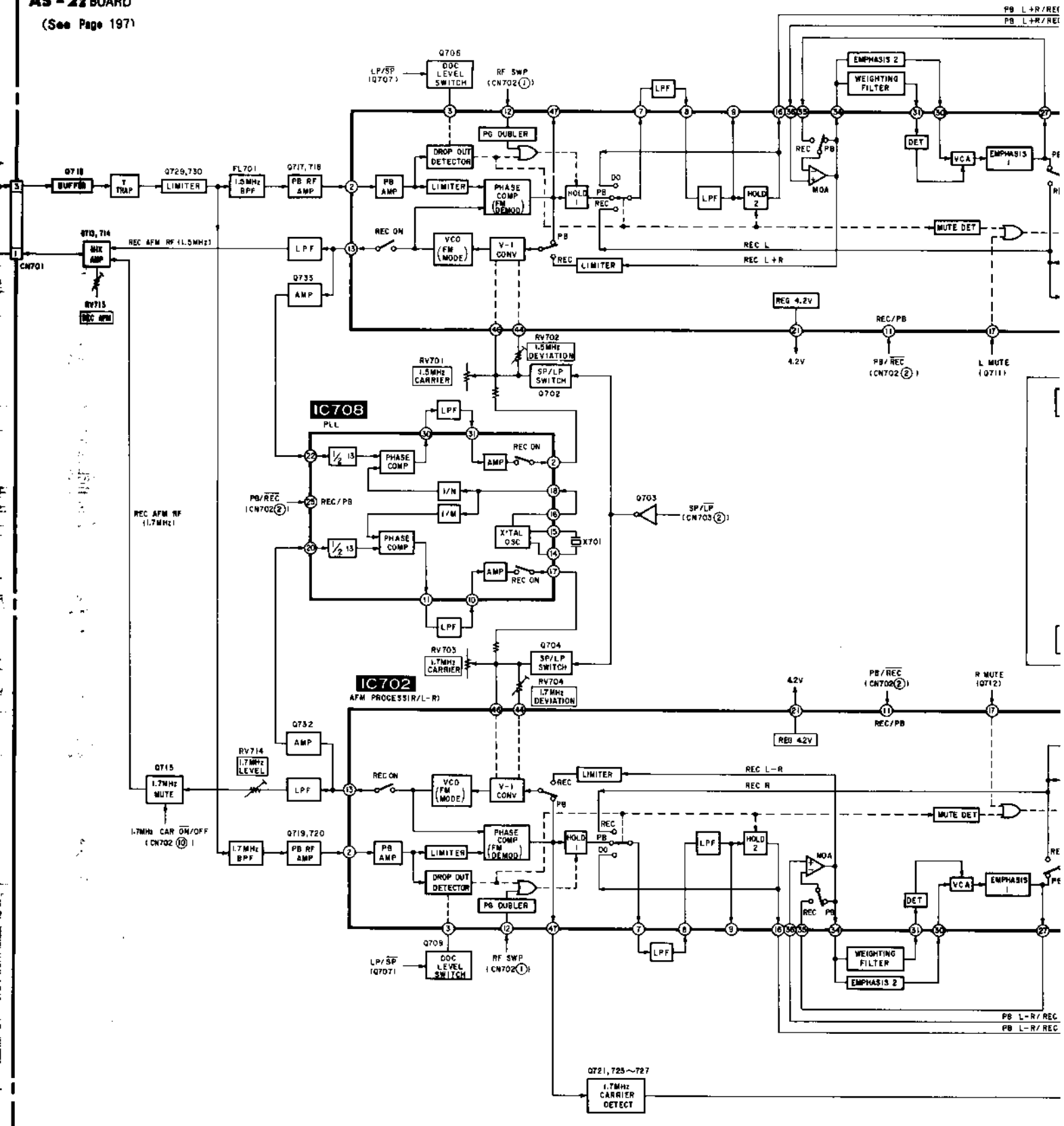

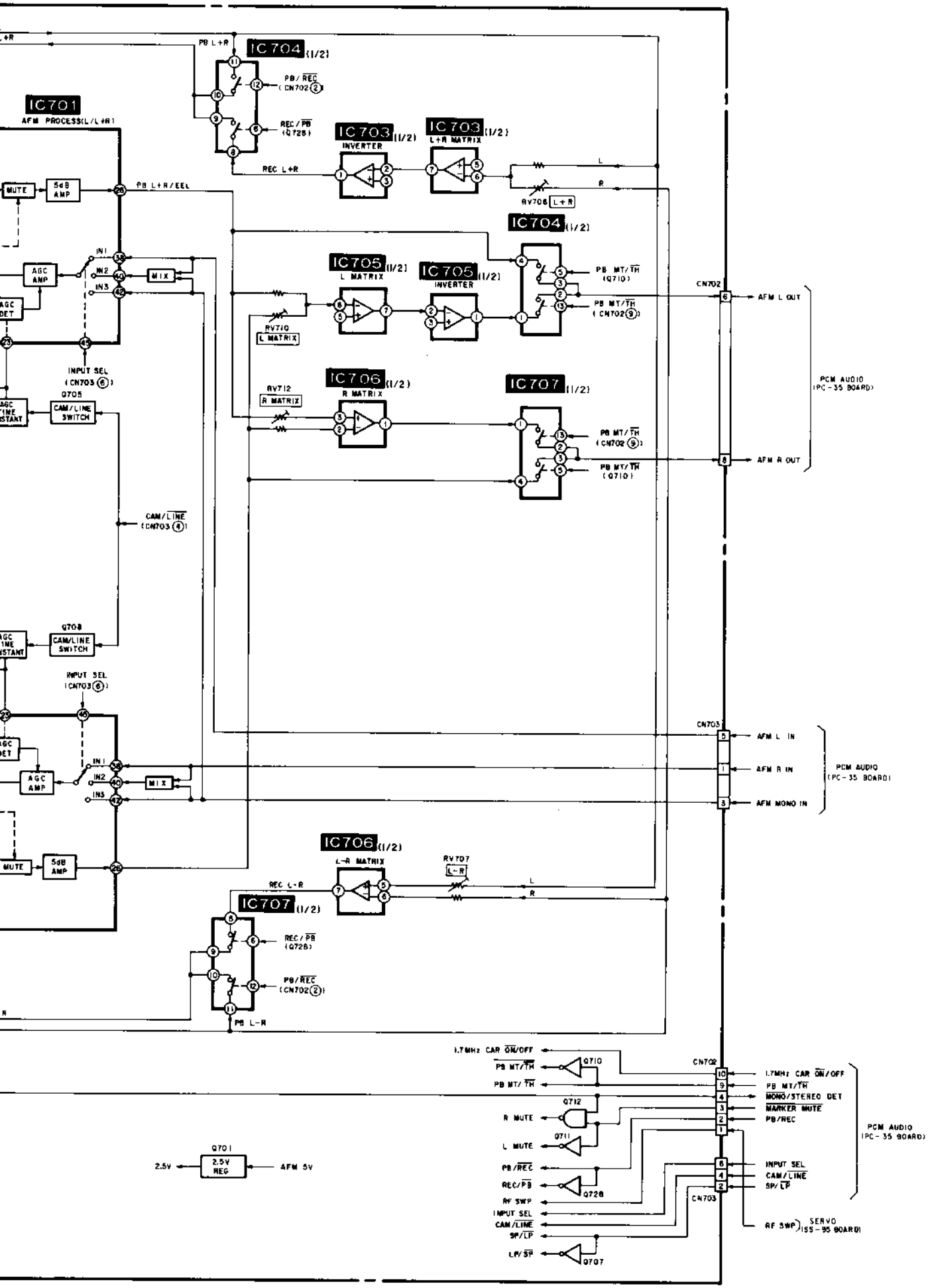
IC701
AFM PROCESS(L/L+R)
IC704 (1/2)
PB/REC (CN702 2)
REC/PB (Q728)
IC703 (1/2)
INVERTER
IC703 (1/2)
L+R MATRIX
REC L+R
PB L+R/EEL
MUTE
5dB AMP
RV708 L+R
IC704 (1/2)
IC705 (1/2)
L MATRIX
IC705 (1/2)
INVERTER
RV710 L MATRIX
PB MT/TH (Q710)
PB MT/TH (CN702 9)
CN702
AFM L OUT
AFM R OUT
PCM AUDIO (PC-35 BOARD)
IC706 (1/2)
R MATRIX
RV712 R MATRIX
IC707 (1/2)
PB MT/TH (CN702 9)
PB MT/TH (Q710)
AGC AMP
MIX
IN1
IN2
IN3
INPUT SEL (CN703 6)
Q705
CAM/LINE SWITCH
CAM/LINE (CN703 4)
Q708
CAM/LINE SWITCH
INPUT SEL (CN703 6)
CN703
AFM L IN
AFM R IN
AFM MONO IN
PCM AUDIO (PC-35 BOARD)
IC706 (1/2)
L-R MATRIX
RV707 L-R
REC L-R
IC707 (1/2)
REC/PB (Q728)
PB/REC (CN702 2)
PB L-R
1.7MHz CAR ON/OFF
PB MT/TH
Q710
PB MT/TH
CN702
1.7MHz CAR ON/OFF
PB MT/TH
MONO/STEREO DET
MARKER MUTE
PB/REC
Q712
R MUTE
Q711
L MUTE
PB/REC
REC/PB
Q728
RF SWP
INPUT SEL
CAM/LINE
SP/LP
LP/SP
Q707
INPUT SEL
CAM/LINE
SP/LP
CN703
RF SWP
SERVO (ISS-95 BOARD)
PCM AUDIO (PC-35 BOARD)
Q701
2.5V REG
2.5V
AFM 5V

9-14. VIEW FINDER BLOCK DIAGRAM

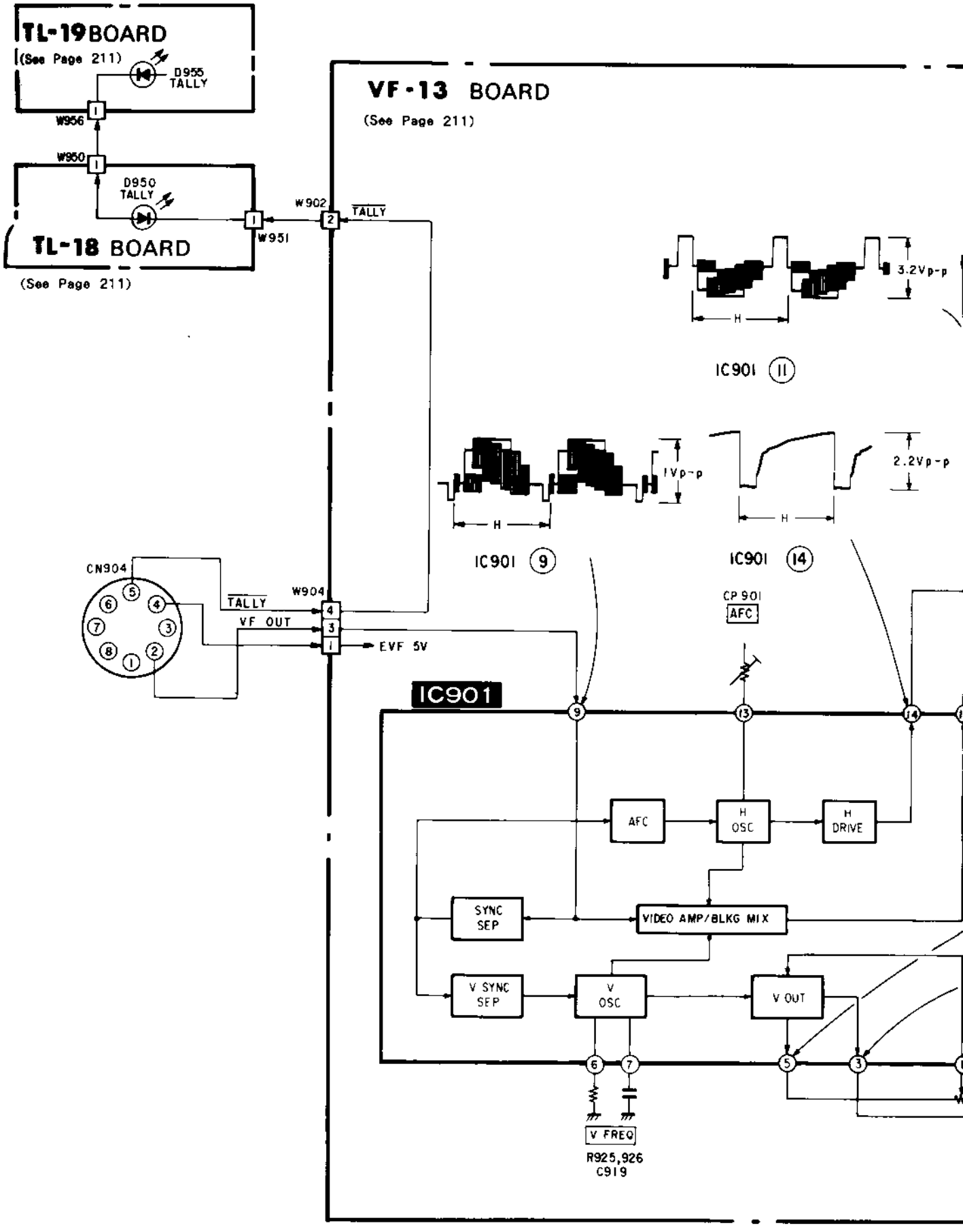

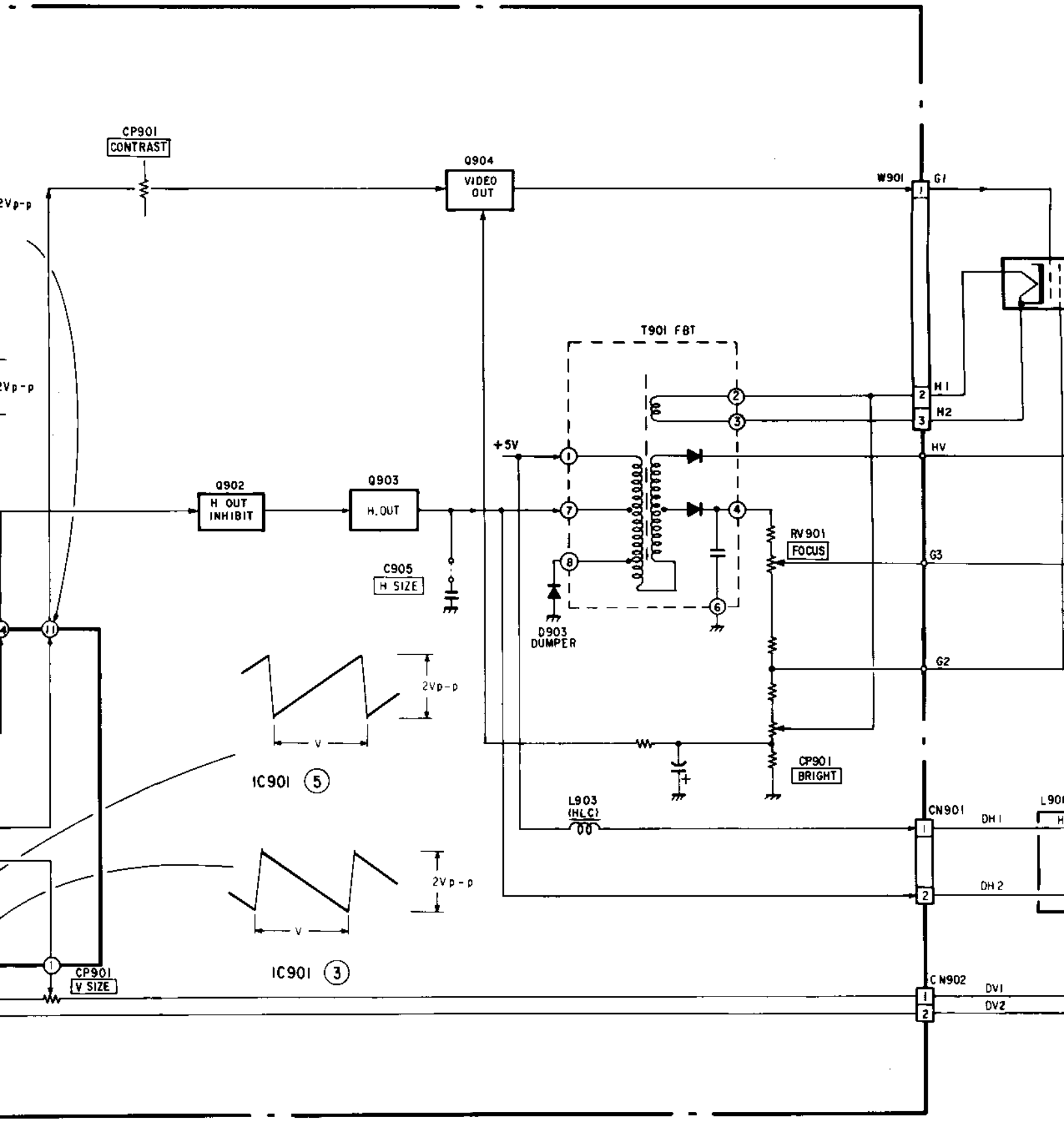
CP901
CONTRAST
Q904
VIDEO
OUT
W901
G1
T901 FBT
H1
H2
+5V
HV
Q902
H OUT
INHIBIT
Q903
H.OUT
RV901
FOCUS
G3
C905
H SIZE
D903
DUMPER
G2
2Vp-p
V
IC901 (5)
CP901
BRIGHT
L903
(HLC)
CN901
DH1
DH2
2Vp-p
V
IC901 (3)
CP901
V SIZE
CN902
DV1
DV2

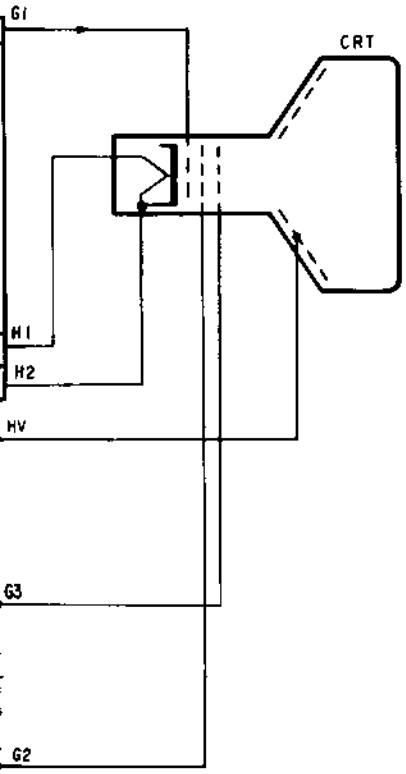
G1
CRT
H1
H2
HV
G3
G2

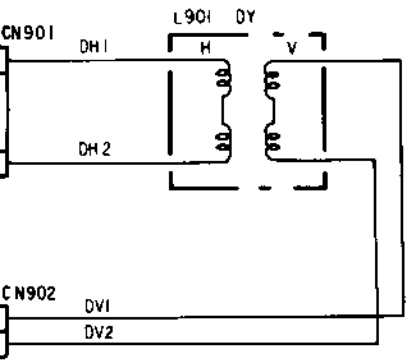
L901
DY
CN901
DH1
H
V
DH2
CN902
DV1
DV2

3-15. POWER BLOCK DIAGRAM

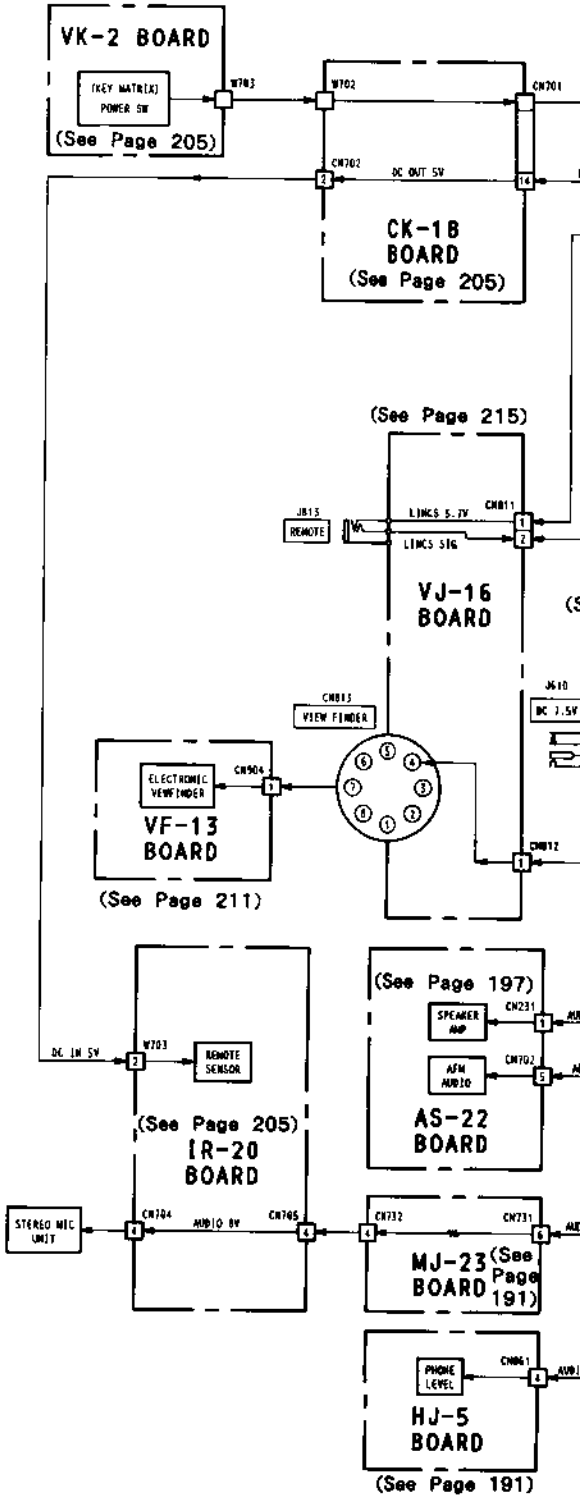

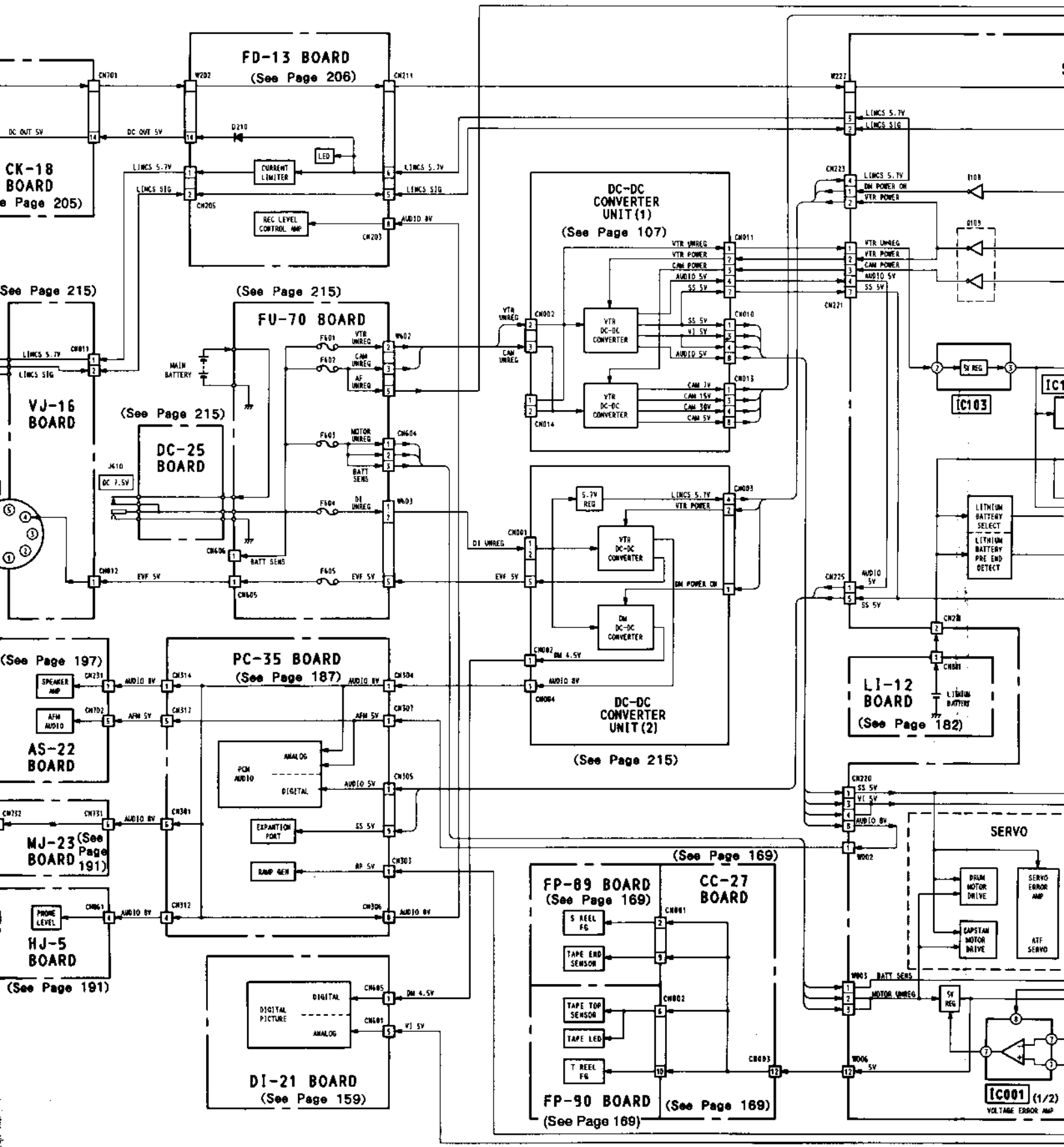
FD-13 BOARD
(See Page 206)
CK-18 BOARD
(See Page 205)
VJ-16 BOARD
(See Page 215)
FU-70 BOARD
(See Page 215)
DC-25 BOARD
(See Page 215)
DC-DC CONVERTER UNIT(1)
(See Page 107)
DC-DC CONVERTER UNIT(2)
(See Page 215)
LI-12 BOARD
(See Page 182)
PC-35 BOARD
(See Page 187)
AS-22 BOARD
(See Page 197)
MJ-23 BOARD
(See Page 191)
HJ-5 BOARD
(See Page 191)
DI-21 BOARD
(See Page 159)
FP-89 BOARD
(See Page 169)
CC-27 BOARD
FP-90 BOARD
(See Page 169)
(See Page 169)
SERVO
IC103
IC001 (1/2)
VOLTAGE ERROR AMP

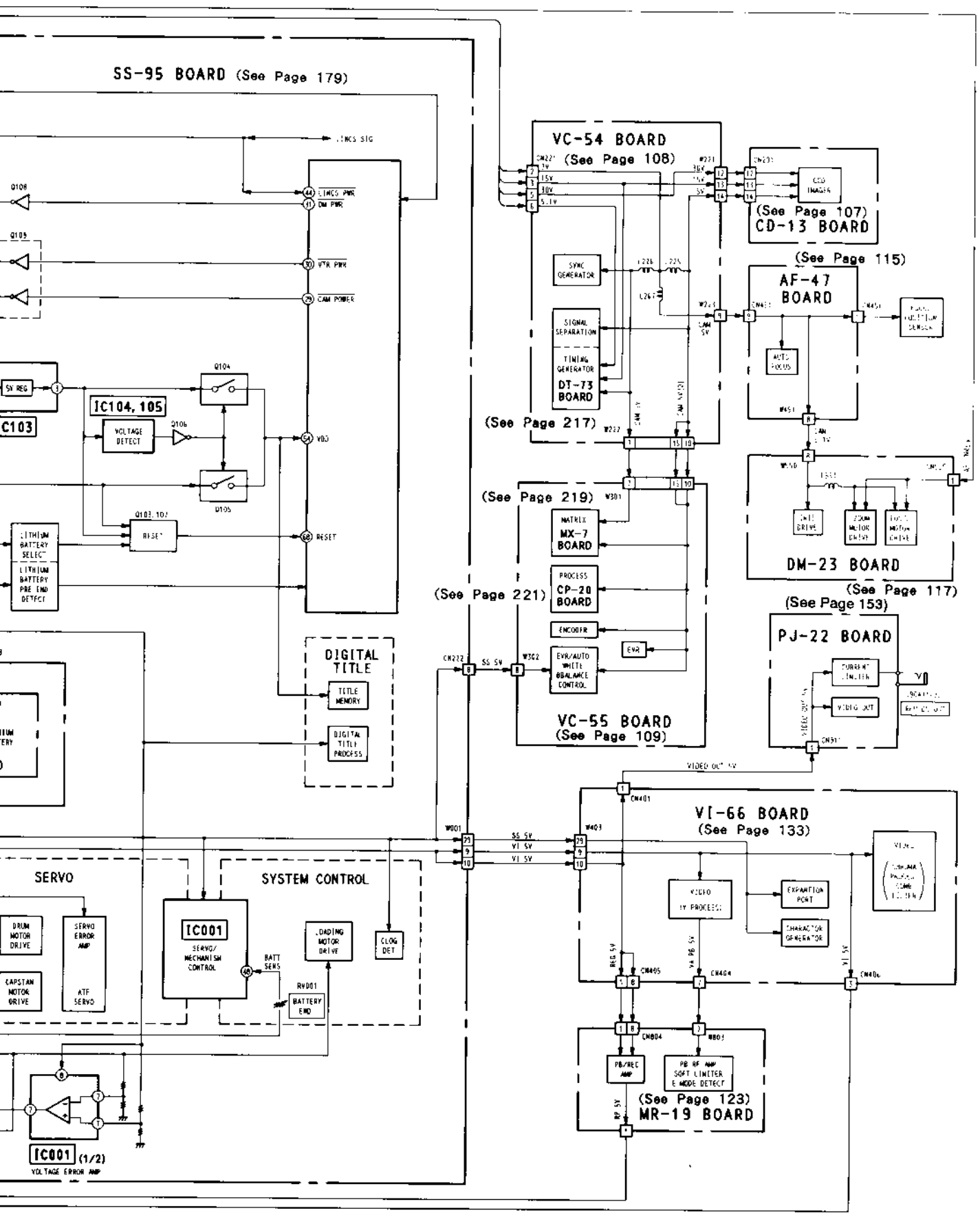
SS-95 BOARD (See Page 179)
VC-54 BOARD
(See Page 108)
CD-13 BOARD
(See Page 107)
AF-47 BOARD
(See Page 115)
DT-73 BOARD
(See Page 217)
DM-23 BOARD
(See Page 117)
(See Page 219)
MX-7 BOARD
CP-20 BOARD
(See Page 221)
VC-55 BOARD
(See Page 109)
PJ-22 BOARD
(See Page 153)
VI-66 BOARD
(See Page 133)
MR-19 BOARD
(See Page 123)
IC104, 105
IC103
DIGITAL TITLE
SERVO
SYSTEM CONTROL
IC001
IC001 (1/2)
VOLTAGE ERROR AMP

CCD-V5000
RMT-500

SERVICE MANUAL

US Model
Canadian Model
E Model

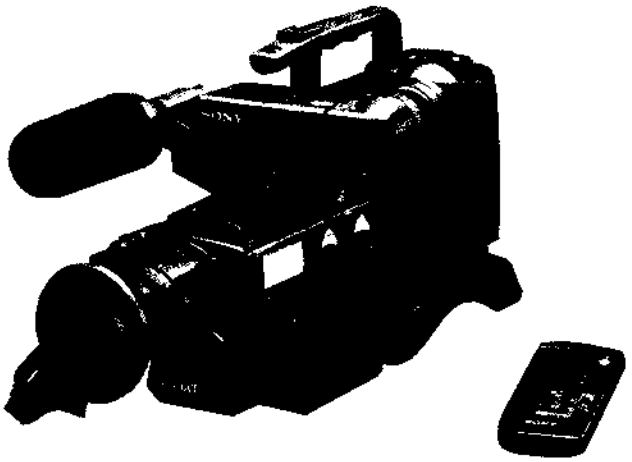

Hi8 PRO

U MECHANISM

For MECHANISM ADJUSTMENTS, refer to the "8 mm Video MECHANICAL ADJUSTMENT MANUAL III" (9-972-732-11).

SPECIFICATIONS

System

Video recording system	Rotary two heads, Helical scanning FM system
Audio recording system	Standard: Rotary head, FM system (2 channels) PCM: PCM system (2 channels)
Video signal	NTSC color, EIA standards
Usable cassette	8 mm video format cassette
Tape speed	SP: Approx. 1.43 cm/sec. LP: Approx. 0.72 cm/sec. (playback only)
Recording time	SP mode: 2 hours (E6/P6 – 120)
Playback time	SP mode: 2 hours LP mode: 4 hours (E6/P6 – 120)
Fast forward/rewind time	Approx. 7 min. (E6/P6 – 120)
Image device	CCD (Charge Coupled Device)
Viewfinder	Electronic viewfinder (black and white)
Lens	Combined 8 × power zoom lens f = 11 – 88 mm, F1.4 with macro Filter diameter: 52 mm
Auto focus system	TTL
Color temperature	Auto: One push white balance INDOOR 3,200 K OUTDOOR 5,800 K
Minimum illumination	2 lux (F1.4)
Illumination range	2 lux – 100,000 lux (0.2 – 9,294 footcandles)
Recommended illumination	More than 100 lux (9.3 footcandles)
Aperture correction	Automatic, manual (variable)

PCM

Sampling frequency	31.5 kHz
Audio frequency	20 Hz – 15 kHz
Dynamic range	More than 85 dB
Wow and flutter	Less than 0.005% RMS

Input and output connector

Video output	Phono jack, 1 Vp-p, 75 ohms unbalanced, sync negative

– Continued on next page –

- **SERVICE OF REMOTE COMMANDER RMT-500**

Remote commander RMT-500 is available as a unit. But as individual parts the battery case lid of commander is only avaiable.

MICROFILM

8 VIDEO CAMERA RECORDER

SONY

VI-66 (VIDEO SIGNAL PROCESS) SCHEMATIC DIAGRAMS

—Ref. No. VI-66 BOARD: 4000 series —

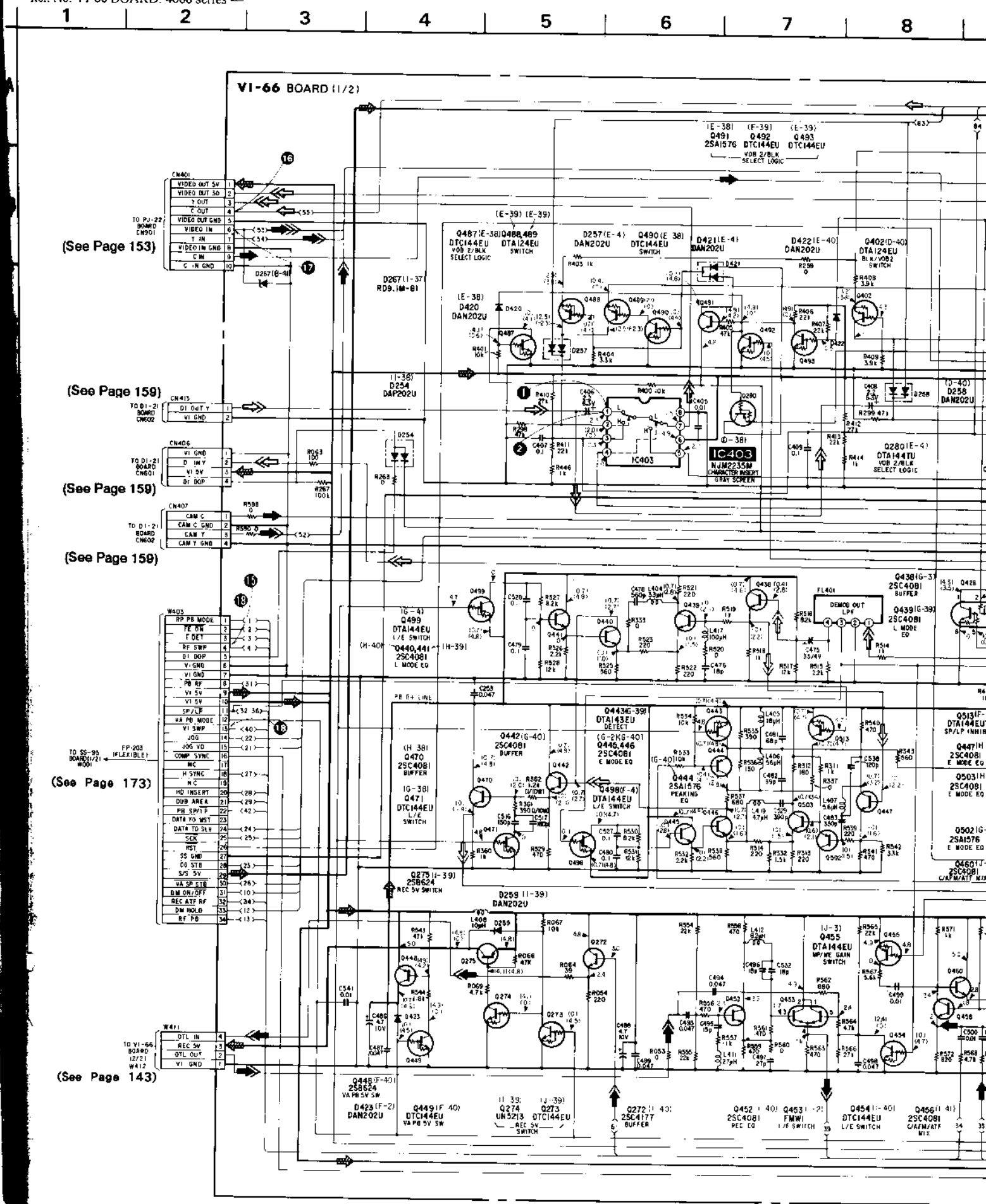

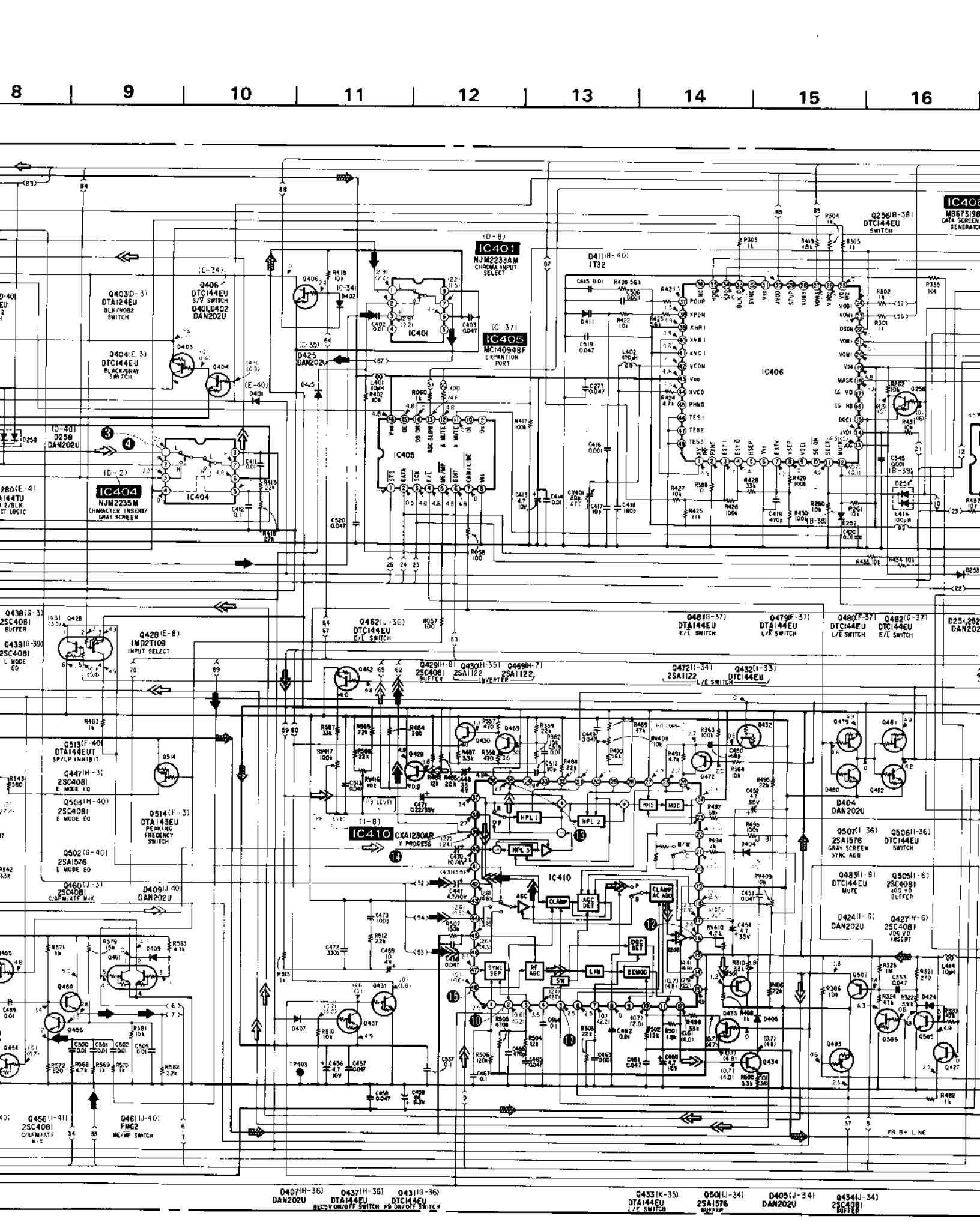
8
9
10
11
12
13
14
15
16
IC401
NJM2233AM
CHROMA INPUT SELECT
IC405
MC14094BF
EXPANTION PORT
IC404
NJM2235M
CHARACTER INSERT/ GRAY SCREEN
IC406
IC410
CXA1230AR
Y PROCESS
Q406
DTC144EU
S/V SWITCH
D401,D402
DAN202U
Q403
DTA124EU
BLK/VIDEO SWITCH
Q404
DTC144EU
BLACK/GRAY SWITCH
D425
DAN202U
D258
DAN202U
Q428
IMD2T109
INPUT SELECT
Q462
DTC144EU
E/L SWITCH
Q429
2SC4081
BUFFER
Q430
2SA1122
INVERTER
Q469
2SA1122
Q472
2SA1122
Q432
DTC144EU
L/E SWITCH
Q481
DTA144EU
E/L SWITCH
Q479
DTA144EU
L/E SWITCH
Q480
DTC144EU
L/E SWITCH
Q482
DTC144EU
E/L SWITCH
D404
DAN202U
Q507
2SA1576
GRAY SCREEN SYNC ADD
Q506
DTC144EU
SWITCH
Q483
DTC144EU
MUTE
Q505
2SC4081
VIDEO BUFFER
D424
DAN202U
Q427
2SC4081
VIDEO INSERT
Q513
DTA144EUT
SP/LP INHIBIT
Q514
DTA143EU
PEAKING FREQENCY SWITCH
Q447
2SC4081
E MODE EQ
Q503
2SC4081
E MODE EQ
Q502
2SA1576
E MODE EQ
Q460
2SC4081
CAFM/ATF MIX
D409
DAN202U
Q456
2SC4081
CAFM/ATF MIX
D461
FMG2
ME/MF SWITCH
D407
DAN202U
Q437
DTA144EU
RECSV ON/OFF SWITCH
Q431
DTC144EU
PB ON/OFF SWITCH
Q433
DTA144EU
L/E SWITCH
Q501
2SA1576
BUFFER
D405
DAN202U
Q434
2SC4081
BUFFER
PB B+ LINE

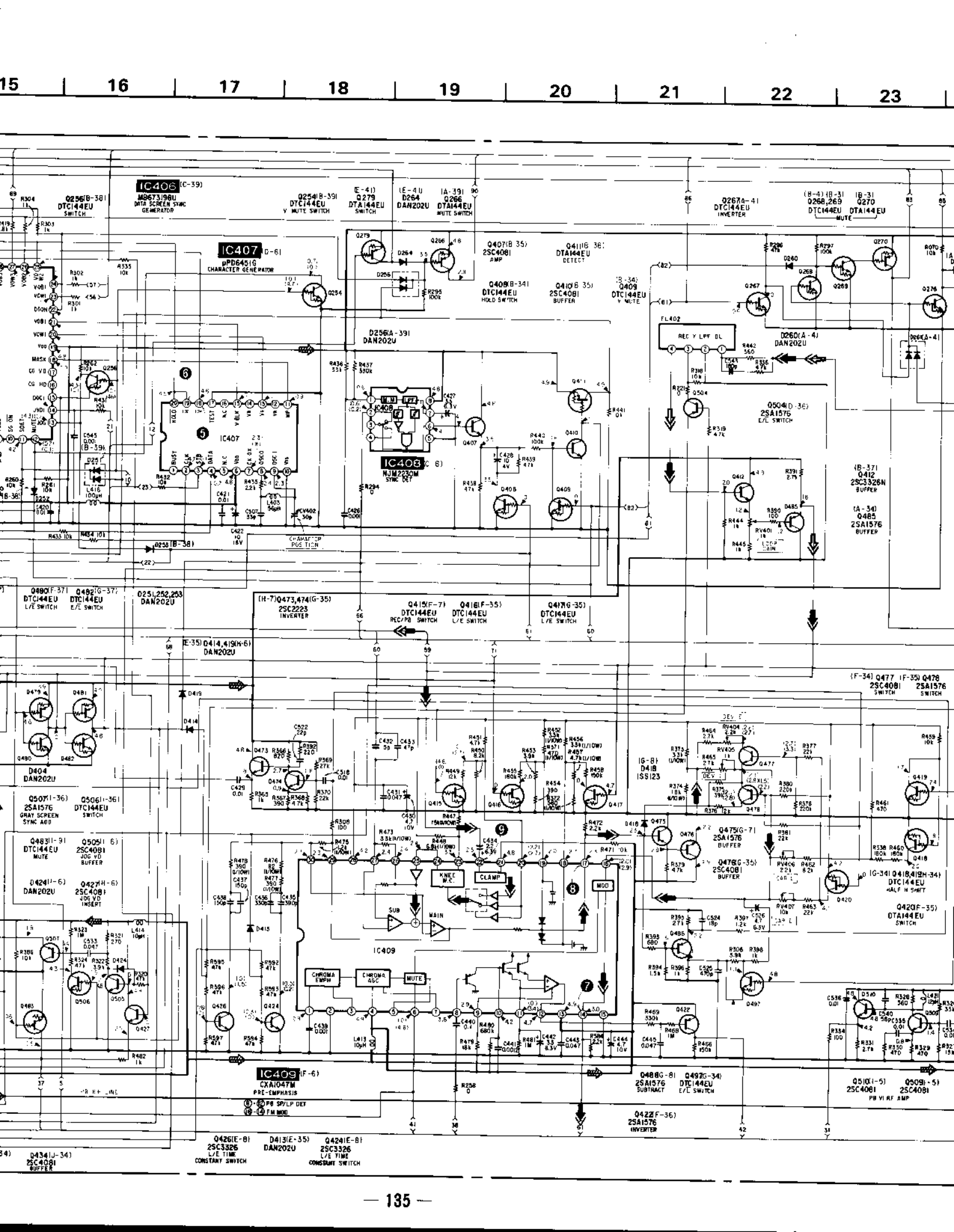
15
16
17
18
19
20
21
22
23
IC406 (C-39)
MB673198U
DATA SCREEN SYNC GENERATOR
IC407 (D-6)
μPD6451G
CHARACTER GENERATOR
IC408 (C-6)
NJM2230M
SYNC DET
IC409 (F-6)
CXA1047M
PRE-EMPHASIS
IC409
KNEE W.C.
CLAMP
MOD
SUB
MAIN
CHROMA EMPH
CHROMA AGC
MUTE
CHARACTER POSITION
REC Y LPF DL
Q256(B-38) DTC144EU SWITCH
Q254(B-39) DTC144EU V MUTE SWITCH
Q279 DTA144EU SWITCH
D264 DAN202U
Q266 DTA144EU MUTE SWITCH
Q267(A-4) DTC144EU INVERTER
Q268,269 DTC144EU
Q270 DTA144EU MUTE
Q407(B-35) 2SC4081 AMP
Q411(B-36) DTA144EU DETECT
Q408(B-34) DTC144EU HOLD SWITCH
Q410(B-35) 2SC4081 BUFFER
Q409 DTC144EU V MUTE
D256(A-39) DAN202U
D260(A-4) DAN202U
Q504(D-36) 2SA1576 E/L SWITCH
Q412 2SC3326N BUFFER
Q485 2SA1576 BUFFER
Q480(F-37) DTC144EU L/E SWITCH
Q482(G-37) DTC144EU E/L SWITCH
D251,252,253 DAN202U
Q473,474(G-35) 2SC2223 INVERTER
Q415(F-7) DTC144EU REC/PB SWITCH
Q416(F-35) DTC144EU L/E SWITCH
Q417(G-35) DTC144EU L/E SWITCH
Q414,419(H-6) DAN202U
Q477 2SC4081 SWITCH
Q478 2SA1576 SWITCH
D404 DAN202U
Q507(I-36) 2SA1576 GRAY SCREEN SYNC ADD
Q506(I-36) DTC144EU SWITCH
Q483(I-9) DTC144EU MUTE
Q505(I-6) 2SC4081 JOG VD BUFFER
D424(I-6) DAN202U
Q427(H-6) 2SC4081 JOG VD INSERT
D418 1SS123
Q475(G-7) 2SA1576 BUFFER
Q476(G-35) 2SC4081 BUFFER
Q418,419(H-34) DTC144EU HALF H SHIFT
Q420(F-35) DTA144EU SWITCH
Q488(G-8) 2SA1576 SUBTRACT
Q497(G-34) DTC144EU E/L SWITCH
Q510(I-5) 2SC4081
Q509(I-5) 2SC4081 PB VI RF AMP
Q422(F-36) 2SA1576 INVERTER
Q426(E-8) 2SC3326 L/E TIME CONSTANT SWITCH
D413(E-35) DAN202U
Q424(E-8) 2SC3326 L/E TIME CONSTANT SWITCH
Q434(J-34) 2SC4081 BUFFER

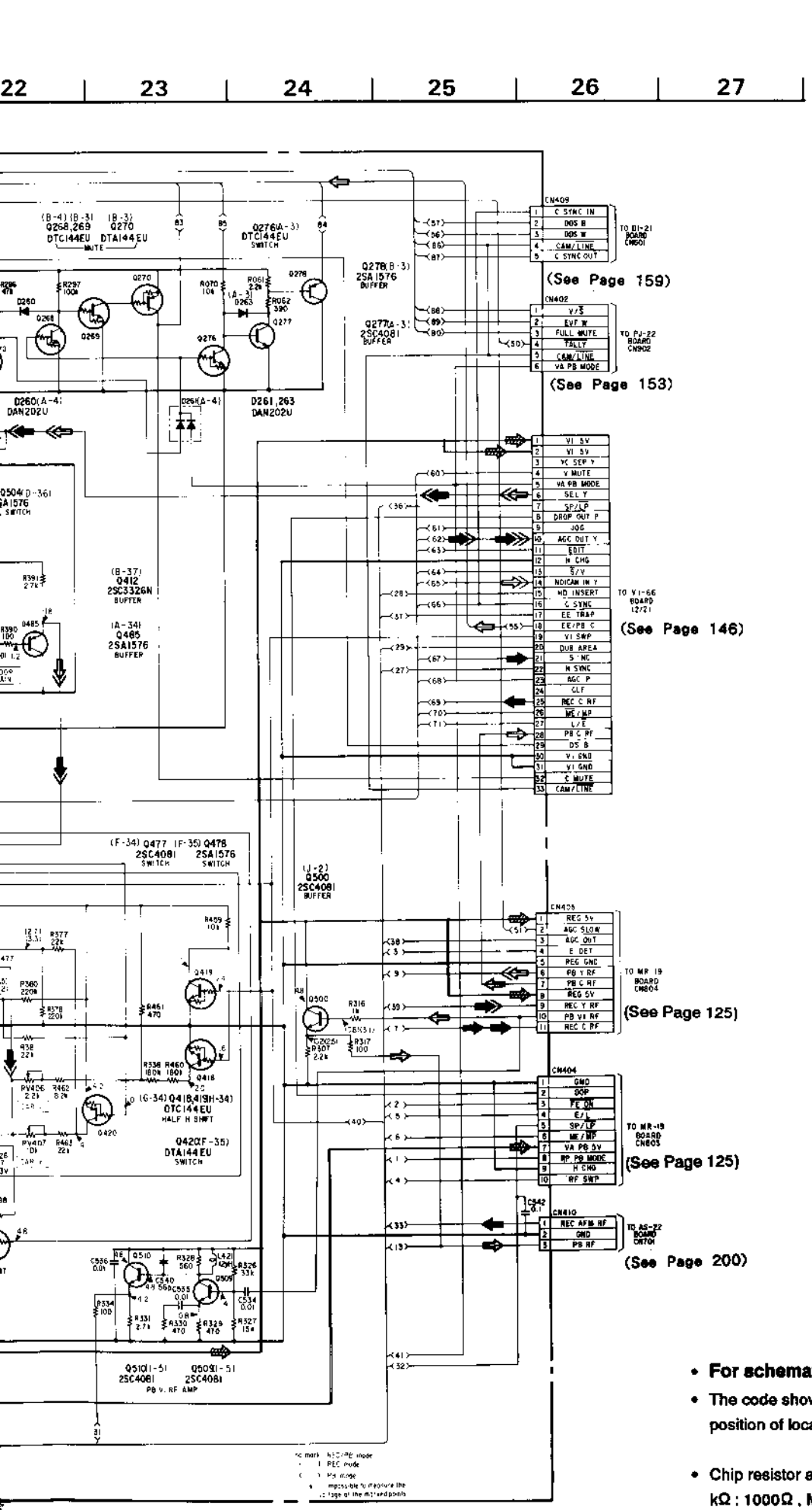

- **For schematic diagrams.**
- The code shown like (C-9) for each semiconductor indicates the position of location address on the printed wiring board.
- Chip resistor are 1/16W unless otherwise noted.
  kΩ : 1000Ω , MΩ : 1000kΩ .

VI-66 (VIDEO SIGNAL PROCESS) SCHEMATIC DIAGRAMS

— Ref. No. VI-66 BOARD: 4000 series —

The HIC, HD-8 board schematic
page 225.

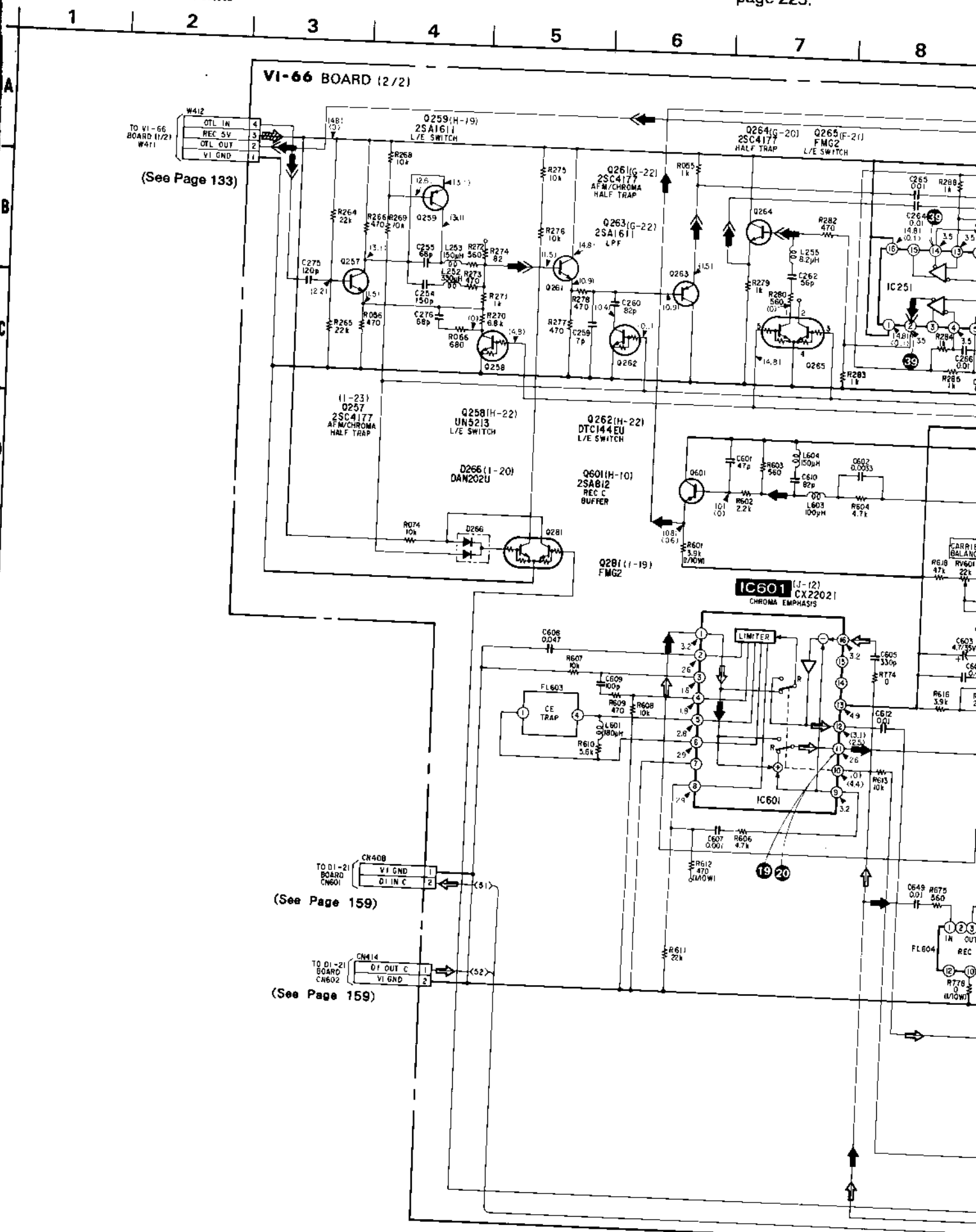

chematic diagram is shown on

8 | 9 | 10 | 11 | 12 | 13 | 14 | 15 | 16

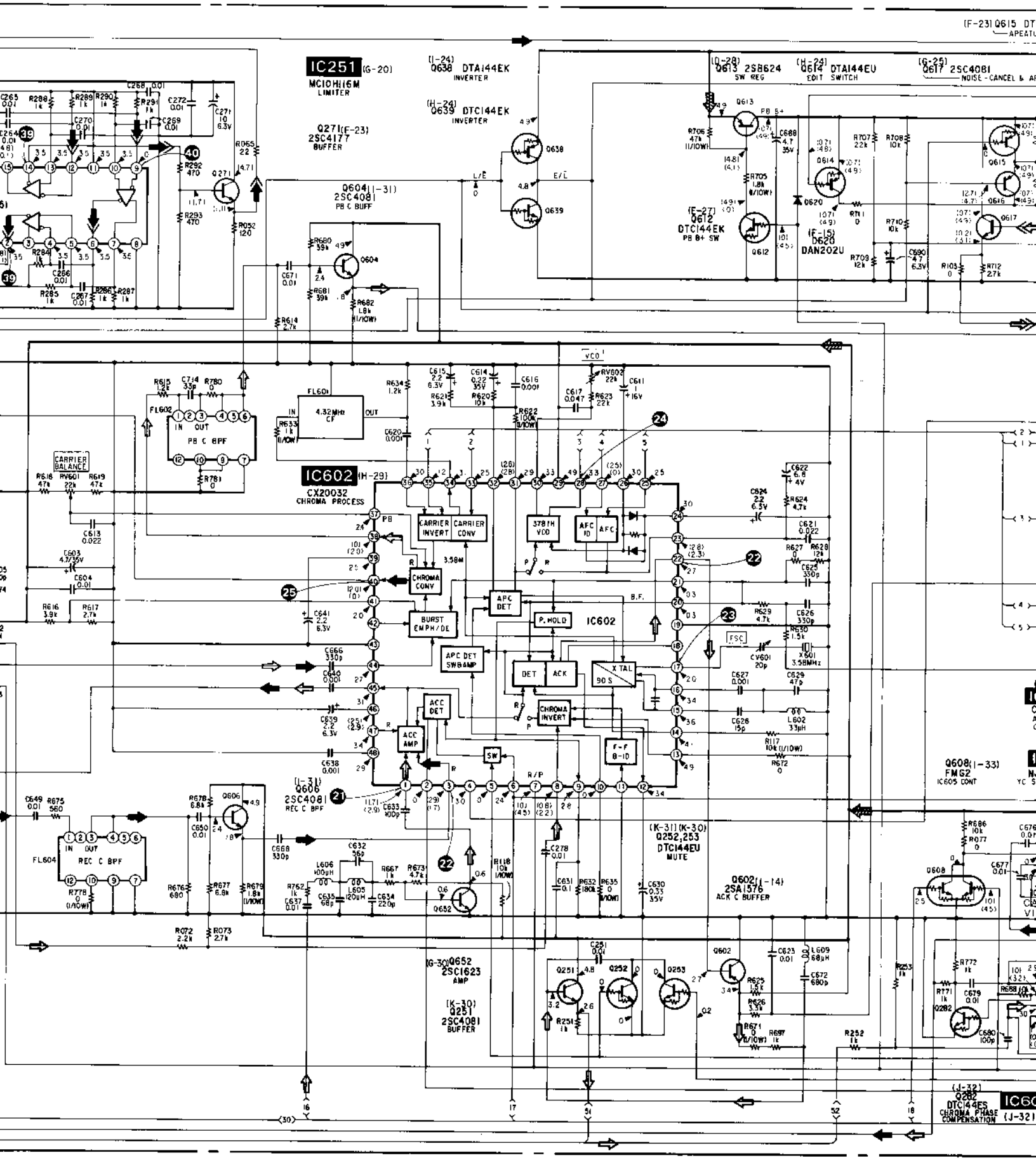

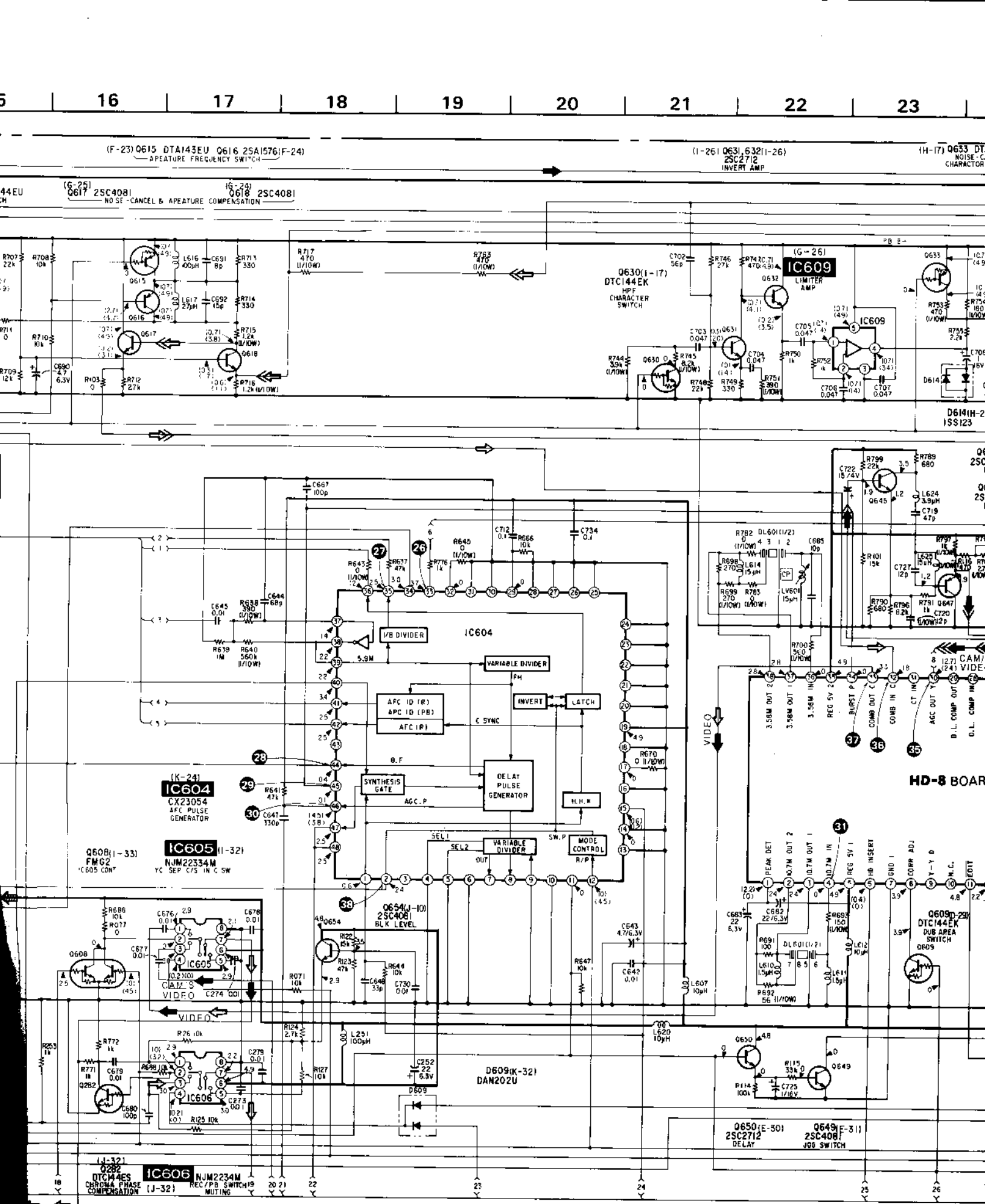
16
17
18
19
20
21
22
23
(F-23) Q615 DTA143EU Q616 2SA1576(F-24)
APEATURE FREQUENCY SWITCH
(G-25) Q617 2SC4081
(G-24) Q618 2SC4081
NOISE-CANCEL & APEATURE COMPENSATION
(I-26) Q631, Q632 (I-26) 2SC2712
INVERT AMP
(H-17) Q633 DT
NOISE-C
CHARACTOR
(G-26) IC609
LIMITER AMP
Q630 (I-17) DTC144EK
HPF CHARACTER SWITCH
D614 (H-2) 1SS123
IC604
I/8 DIVIDER
VARIABLE DIVIDER
APC ID (R)
APC ID (PB)
AFC (P)
INVERT
LATCH
C SYNC
SYNTHESIS GATE
DELAY PULSE GENERATOR
H.H.K
SEL1
SEL2
VARIABLE DIVIDER
MODE CONTROL
R/P
(K-24) IC604 CX23054 AFC PULSE GENERATOR
Q608 (I-33) FM62
IC605 (I-32) NJM2233M YC SEP C/S IN C SW
Q654 (J-10) 2SC4081 BLK LEVEL
CAM'S VIDEO
VIDEO
Q609 (I-29) DTC144EK DUB AREA SWITCH
D609 (K-32) DAN202U
Q650 (E-30) 2SC2712 DELAY
Q649 (E-31) 2SC4081 JOG SWITCH
(J-32) Q282 DTC144ES CHROMA PHASE COMPENSATION
IC606 NJM2234M REC/PB SWITCH MUTING
HD-8 BOAR

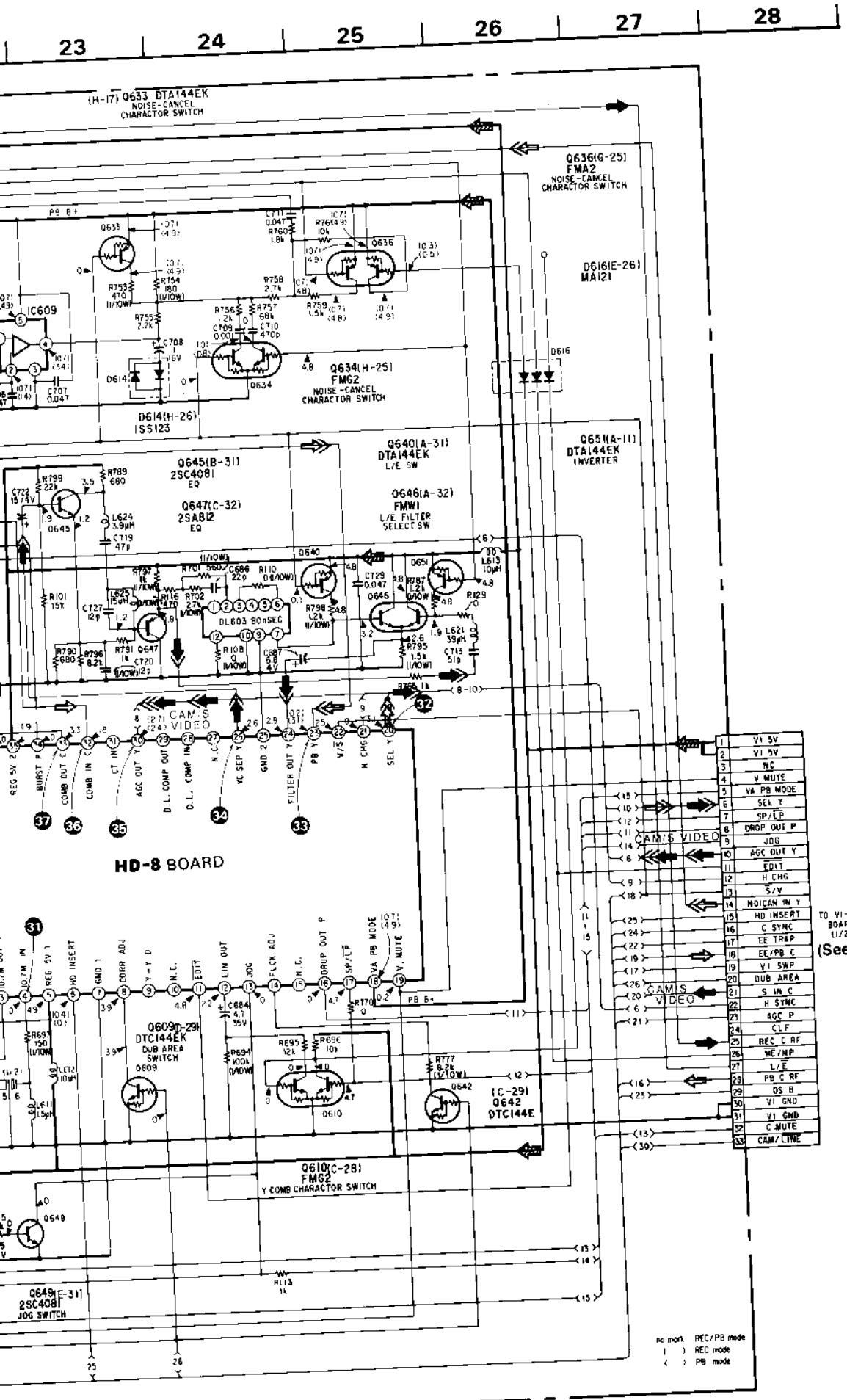

VI-66 BOARD (2/2)

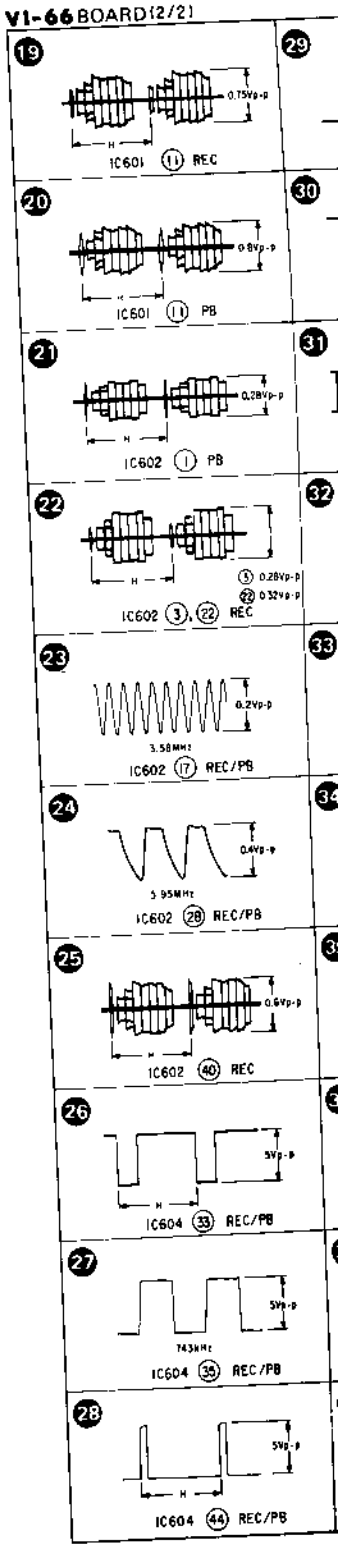

- **SIGNAL PATH**

	VIDEO	
	CHROMA	Y
REC	➡	➡
PB	⇨	⇨

PJ-22 (VIDEO AMP, INPUT/OUTPUT CONNECTOR) SCHEMATIC DIAGRAMS

— Ref. No. PJ-22 BOARD: 5000 series —

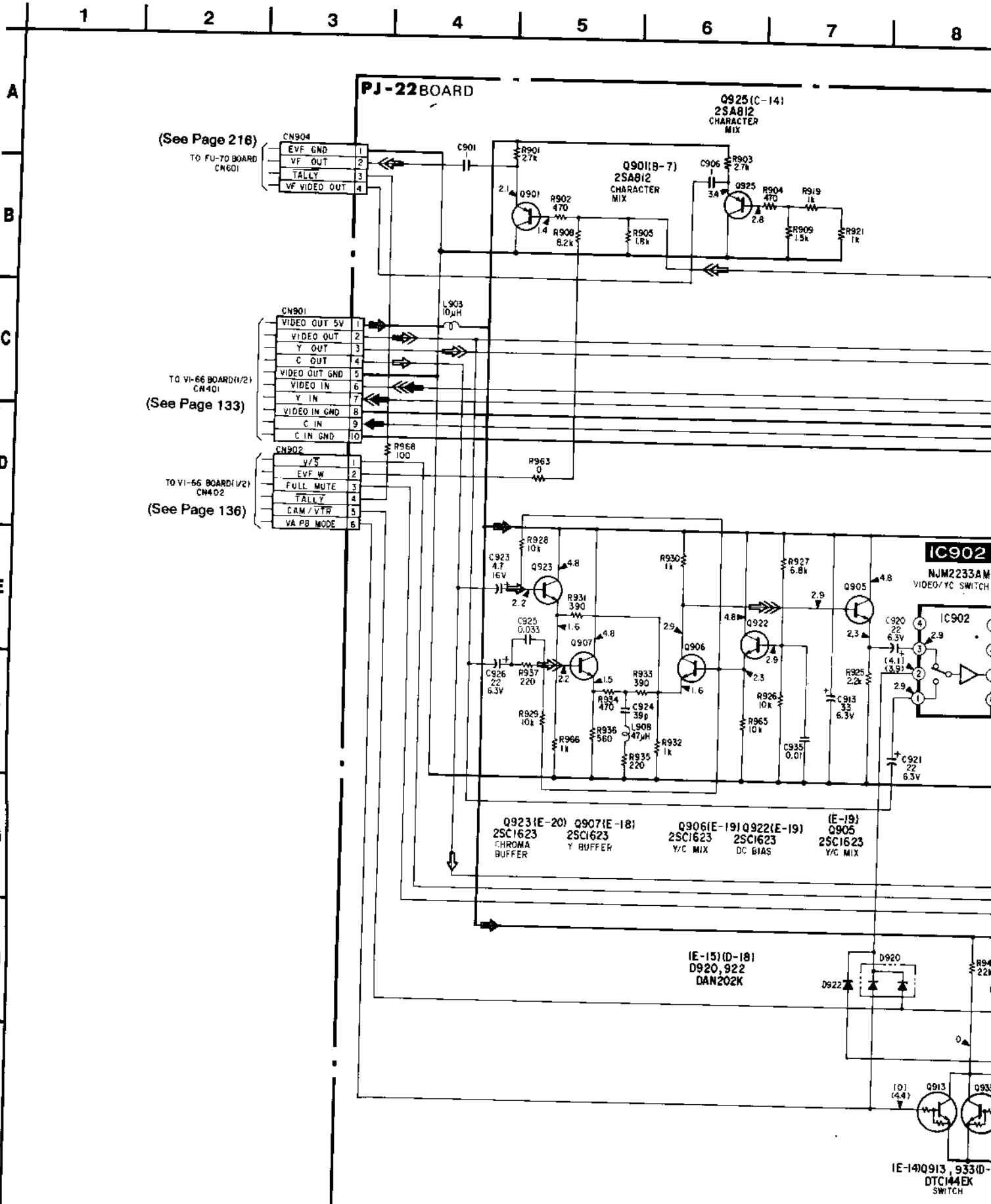

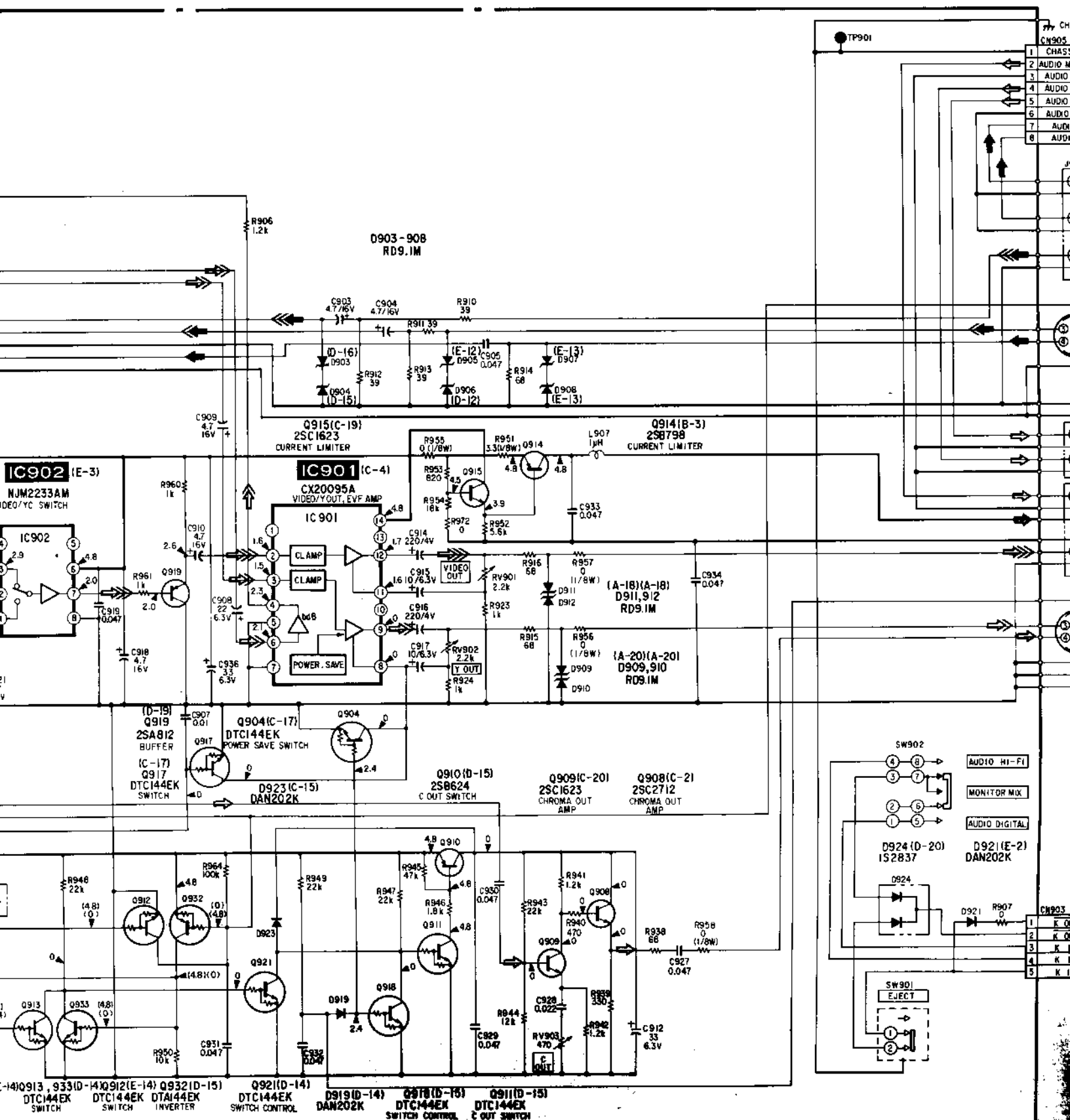
TP901
IC902 (E-3)
NJM2233AM
VIDEO/YC SWITCH
IC901 (C-4)
CX20095A
VIDEO/YOUT, EVF AMP
IC901
CLAMP
CLAMP
POWER SAVE
VIDEO OUT
Y OUT
C OUT
D903-908
RD9.1M
Q915(C-19)
2SC1623
CURRENT LIMITER
Q914(B-3)
2SB798
CURRENT LIMITER
D911,912
RD9.1M
(A-18)(A-18)
D909,910
RD9.1M
(A-20)(A-20)
Q919
2SA812
BUFFER
Q904(C-17)
DTC144EK
POWER SAVE SWITCH
(C-17)
Q917
DTC144EK
SWITCH
D923(C-15)
DAN202K
Q910(D-15)
2SB624
C OUT SWITCH
Q909(C-20)
2SC1623
CHROMA OUT AMP
Q908(C-2)
2SC2712
CHROMA OUT AMP
SW902
AUDIO HI-FI
MONITOR MIX
AUDIO DIGITAL
D924(D-20)
1S2837
D921(E-2)
DAN202K
SW901
EJECT
Q913, 933(D-14)
DTC144EK
SWITCH
Q912(E-14)
DTC144EK
SWITCH
Q932(D-15)
DTA144EK
INVERTER
Q921(D-14)
DTC144EK
SWITCH CONTROL
D919(D-14)
DAN202K
Q918(D-15)
DTC144EK
SWITCH CONTROL
Q911(D-15)
DTC144EK
C OUT SWITCH
No mark: REC/PB mode
[ ] : CAMERA REC mode
( ) : PB mode

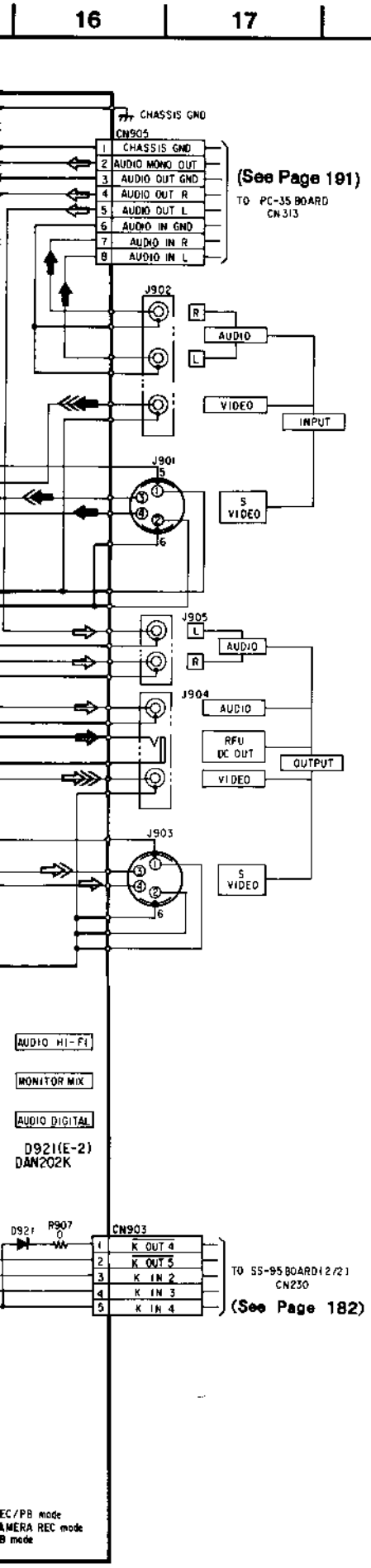

- **SIGNAL PATH**

	VIDEO SIGNAL			AUDIO SIGNAL
	CHROMA	Y	Y/CHROMA/DATA	
REC	➡	➡	➡	➡
PB	⇨	⇨	⇨	⇨

- **For schematic diagrams.**
- The code shown like (C-9) for each semiconductor indicates the position of location address on the printed wiring board.

CCD-V5000

RMT-500

SONY

SERVICE MANUAL

US Model

Canadian Model

E Model

CORRECTION-1

Please correct your service manual.

☛ : **Corrected portion**

Page	INCORRECT	CORRECT
312	2. Auto focus adjustment (AF-47 board) Auto-focus Adjustment: 1) Set the focus ring to the close extreme (1.3 m) and shoot the Siemens star with the standard picture frame. 2) Press FOCUS PUSH AUTO button (S207 on FD-13 board). After 2.5 seconds, confirm that a sharp image of Siemens star can be obtained and then releases the hand. 3) Select the adjustment address 37 with the adjustment remote controller and enter the adjustment data FF. (Auto focus filter will be fixed at FH side.) 4) Read the indication of AF jig and convert this data D to decimal to obtain D'. Obtain FH SM' by the following formula. FH SM'=D'/2.5 Convert FH SM' to hexadecimal and obtain FH SM. (Omit the decimals. FH SM should be within 10 to 40.) 5) Enter FH SM into the adjustment address 43. 6) Select the adjustment address 37 with the adjustment remote controller and enter the adjustment data FD. (Auto focus filter will be fixed at FA side.) 7) Read the indication of AF jig and convert this data D to decimal to obtain D'. Obtain FA SM' by the following formula. FA SM'=D'/1.6 Convert FA SM' to hexadecimal and obtain FA SM. (Omit the decimals. FA SM should be within 40 to 80.) 8) Enter FA SM into the adjustment address 42. 9) Select the adjustment address 47 and enter the adjustment data below. GETA H=FH B+2 (FH B is the data at the adjustment address 45.)	2. Auto focus adjustment (AF-47 board) Auto-focus Adjustment: 1) Set the focus ring to the close extreme (1.3 m) and shoot the Siemens star with the standard picture frame. 2) Press FOCUS PUSH AUTO button (S207 on FD-13 board). After 2.5 secconds, confirm that a sharp image of Siemens star can be obtained and then release the hand. 3) Select the adjustment address 37 with the adjustment remote controller and enter the adjustment data FF. (Auto focus filter will be fixed at FH side.) 4) Read the indication of AF jig and assume this Value as FH SM. (FH SM should be 10 to 40.) 5) Enter FH SM into the adjustment address 43. 6) Select the adjustment address 37 with the adjustment remote controller and enter the adjustment data FD. (Auto focus filter will be fixed at FA side.) 7) Read the indication of AF jig and assume this Value as FA SM. (FA SM should be within 40 to 80.) 8) Enter FA SM into the adjustment address 42. 9) Select the adjustment address 47 and enter the adjustment data below. GETA H=FH B+2 (FH B is the data at the adjustment address 45.)

Page 327 9-1-5. Alignment tape

☛ : Corrected portion

Alignment Tape for AFM Stereo Operation Check

Name	REC mode	Type	Speed	Contents		Usage
				Video area	PCM area	
AFM stereo operation check WR5-9NS (8-967-995-23)	L	MP	SP	• Video signal Color bar: 4 min. Monoscope: 4 min. • Audio signal (AFM) ☛ Stereo section (color bar) L ch: 400 Hz, R ch: 1 kHz L+R: (1.5 MHz, ± 60 kHz DEV) L–R: (1.7 MHz, ± 30 kHz DEV) ☛ Bilingual section (monoscope) MAIN: 400 Hz (1.5 MHz, ± 60 kHz DEV) SUB: 1 kHz (1.7 MHz, ± 30 kHz DEV)	• Audio signal (PCM) 400 Hz: 8 min. ☛	☛ 1.7 MHz Deviation adjustment. AFM stereo operation check

Page 351

6. 1.7 MHz deviation adjustment (AS-22 board)

A. Method using alignment tape

Mode	Playback
Signal	Alignment tape: for AFM stereo operation check (WR5-9NS) Bilingual section (monoscope)
Measurement Point	Pin ⑧ of CN702
Measuring Instrument	Oscilloscope
Adjusting Element	RV704
Specified Value	650 ± 16 mVp-p (–10.6 ± 0.2 dBs)

Switch setting

- AUDIO MONITOR (STEREO/MAIN/SUB) switch (S801 on LI-12 board).....SUB

Adjusting method:

1) Adjust RV704 so that the 1 kHz signal level is 650 ± 16 mVp-p.

English
90L0934-1
Printed in Japan
© 1990. 12
Published by Customer Relations and Service Group

CCD-V5000

SERVICE MANUAL

US Model
Canadian Model
E Model

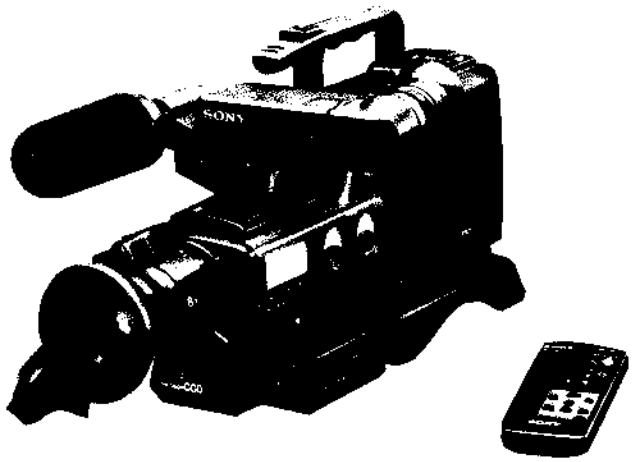

Hi8 PRO

U MECHANISM

For MECHANISM ADJUSTMENTS, refer to the "8 mm Video MECHANICAL ADJUSTMENT MANUAL Ⅲ" (9-972-732-11).

SPECIFICATIONS

System

Video recording system	Rotary two heads, Helical scanning FM system
Audio recording system	Standard: Rotary head, FM system (2 channels)
	PCM: PCM system (2 channels)
Video signal	NTSC color, EIA standards
Usable cassette	8 mm video format cassette
Tape speed	SP: Approx. 1.43 cm/sec.
	LP: Approx. 0.72 cm/sec. (playback only)
Recording time	SP mode: 2 hours (E6/P6 – 120)
Playback time	SP mode: 2 hours
	LP mode: 4 hours (E6/P6 – 120)
Fast forward/rewind time	Approx. 7 min. (E6/P6 – 120)
Image device	CCD (Charge Coupled Device)
Viewfinder	Electronic viewfinder (black and white)
Lens	Combined 8 × power zoom lens
	f = 11 – 88 mm, F1.4 with macro
	Filter diameter: 52 mm
Auto focus system	TTL
Color temperature	Auto: One push white balance
	INDOOR 3,200 K
	OUTDOOR 5,800 K
Minimum illumination	2 lux (F1.4)
Illumination range	2 lux – 100,000 lux (0.2 – 9,294 footcandles)
Recommended illumination	More than 100 lux (9.3 footcandles)
Aperture correction	Automatic, manual (variable)

PCM

Sampling frequency	31.5 kHz
Audio frequency	20 Hz – 15 kHz
Dynamic range	More than 85 dB
Wow and flutter	Less than 0.005% RMS

Input and output connector

Video output	Phono jack, 1 Vp-p, 75 ohms unbalanced, sync negative

– Continued on next page –

- **SERVICE OF REMOTE COMMANDER RMT-500**

Remote commander RMT-500 is available as a unit. But as individual parts the battery case lid of commander is only avalable.

MICROFILM

8 VIDEO CAMERA RECORDER

SONY®

SECTION 5
EXPLODED VIEWS

NOTE:

- –XX, –X mean standardized parts, so they may have some differences from the original one.
- The construction parts of an assembled part are indicated with a collation number in the remark column.
- Items marked "*" are not stocked since they are seldom required for routine service. Some delay should be anticipated when ordering these items.
- The mechanical parts with no reference number in the exploded views are not supplied.

5-1. CABINET (LEFT) ASSEMBLY

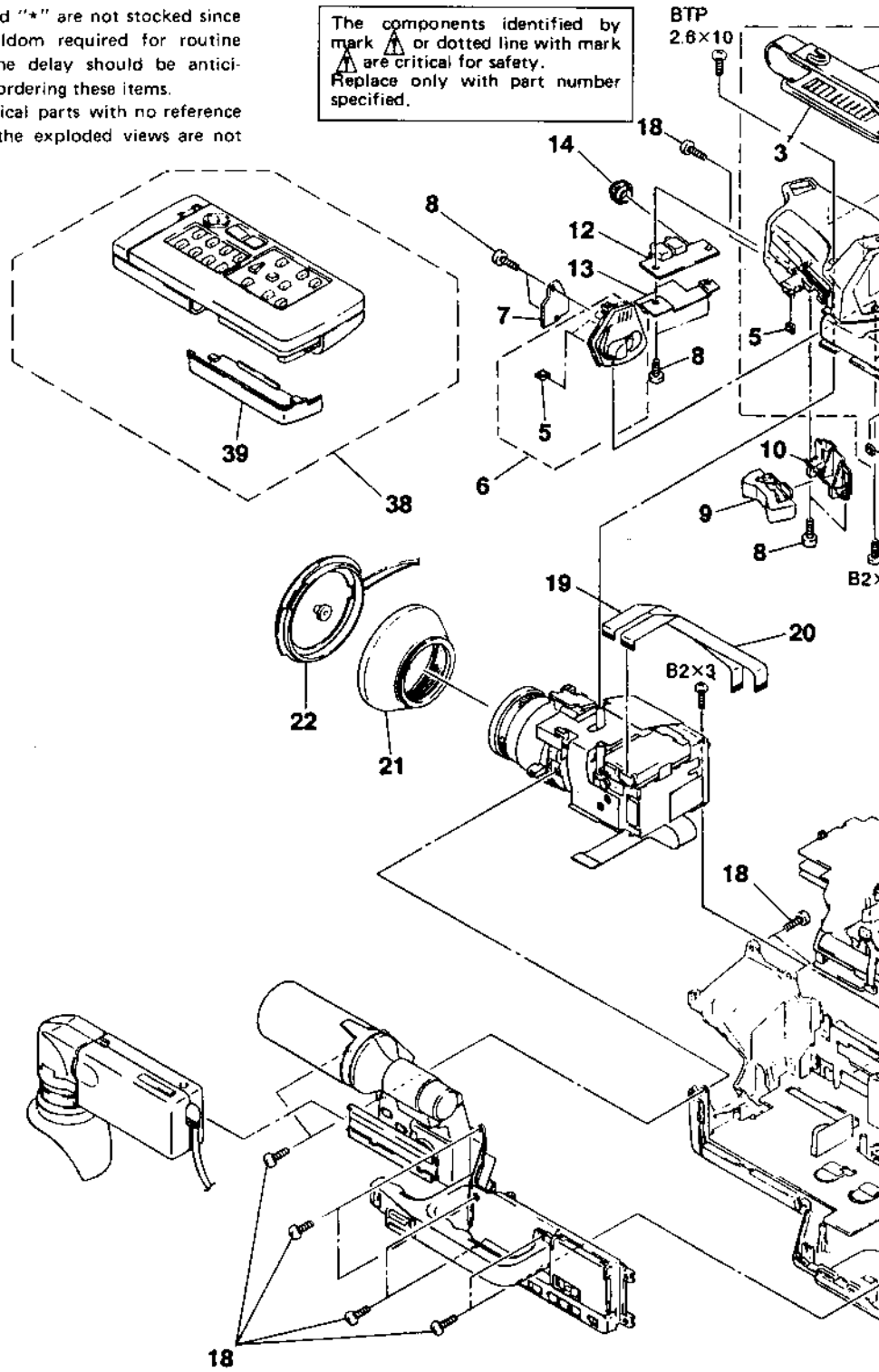

No.	Part No.	Description	Remark
1	X-3742-720-1	CABINET (L) SUB ASSY	2-5
2	3-742-825-01	BELT, GRIP	
3	3-742-851-01	PAD, GRIP	
4	3-669-480-21	+ PTPWH 2	
5	3-718-233-01	NUT, PLATE	
6	X-3742-717-1	BASE SUB ASSY, SP	5
7	*1-633-599-11	SW-113 BOARD	
8	4-356-741-31	SCREW, TAPPING (BIND 2X8)	
9	1-571-373-11	SWITCH, PUSH (ZOOM T/W) (S901)	
10	3-742-802-01	HOLDER, ZM	
11	*1-633-598-11	VJ-6 BOARD	
12	*1-633-594-11	HJ-5 BOARD	
13	3-742-870-01	PLATE, BLIND, HJ	
14	3-742-800-01	KNOB, HV	
15	X-3742-708-1	LID ASSY, CASSETTE	
16	3-733-912-11	SCREW (M2X4.5), SPECIAL HEAD	
17	3-742-869-01	COVER, MIC JACK	
18	3-742-886-11	SCREW (M2X6), +B	
19	1-575-447-11	WIRE, FLAT TYPE 7P	
20	1-575-448-11	WIRE, FLAT TYPE 8P	
21	3-742-798-01	HOOD	
22	X-		
23	*3-		
24	3-		
25	3-		
26	*3-		
27	3-		
28	X-		
29	3-		
30	3-		
31	3-		

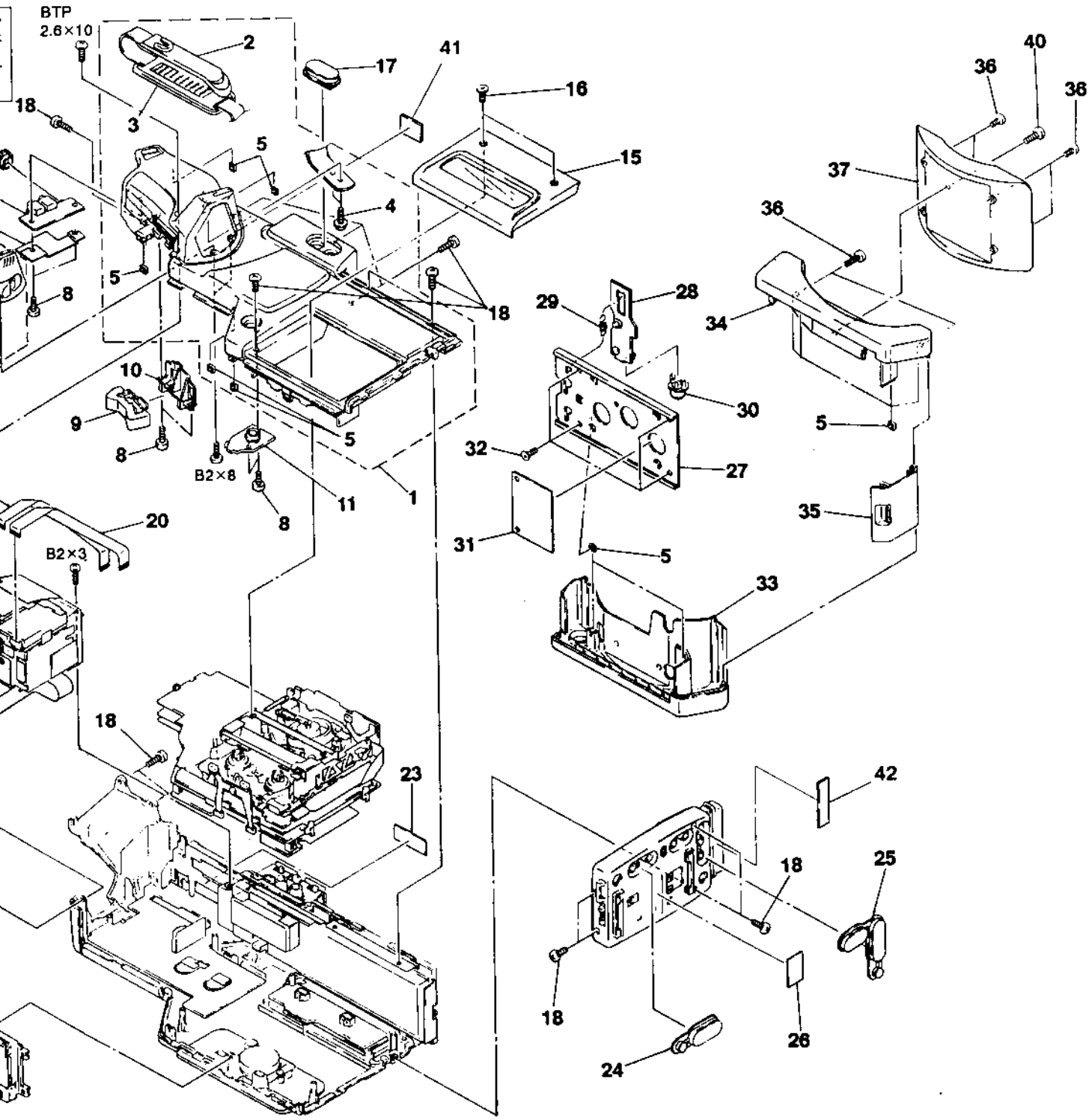

Remark	No.	Part No.	Description
	22	X-3742-727-1	CAP ASSY, HOOD
	23	*3-742-884-01	LABEL, MODEL NUMBER (U/C)
	24	3-742-852-01	COVER (A), JACK
	25	3-742-853-01	COVER (B), JACK
	26	*3-719-683-01	LABEL, BATTERY FITTING
	27	3-742-789-01	PLATE, SLIDE
	28	X-3742-706-1	LEVER ASSY, LOCK
	29	3-307-373-00	SPRING, TENSION
	30	3-742-721-01	KNOB, LOCK
	31	3-742-717-01	PLATE, BLIND
	32	3-719-831-21	SCREW (M2X4)
	33	3-742-843-01	CABINET (R), LOWER
	34	3-742-842-01	CABINET (L), LOWER
	35	3-742-833-01	CABINET (DOOR), LOWER
	36	3-742-886-01	SCREW (M2X4), +B
	37	3-742-881-01	PAT, SHOULDER
	38	1-465-395-11	COMMANDER, REMOTE (RMT-500)
39	39	3-742-854-01	COVER, BATTERY
	40	3-742-900-01	SCREW, STOPPER
	41	*3-704-256-01	LABEL, CAUTION (US MODEL)
	42	*3-725-142-01	LABEL, FUSE (US/Canadian MODEL)

5-2. CABINET (RIGHT) AND CABINET FRAME ASSEMBLIES

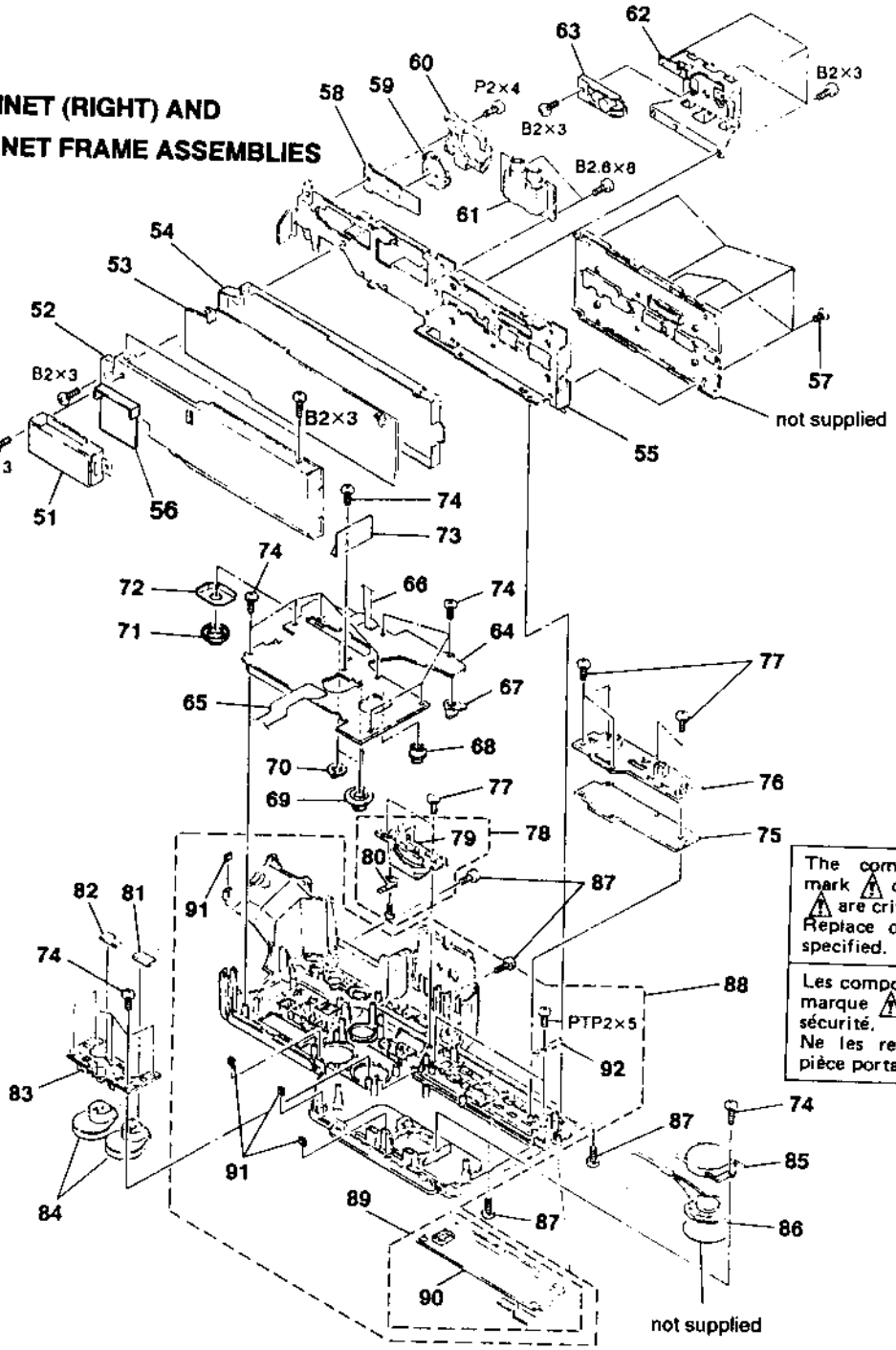

The components identified by mark ⚠ or dotted line with mark ⚠ are critical for safety.
Replace only with part number specified.

Les composants identifiés par une marque ⚠ sont critiques pour la sécurité.
Ne les remplacer que par une pièce portant le numéro spécifié.

No.	Part No.	Description	Remark
51	⚠1-466-291-11	CONVERTER UNIT, DC-DC 2	
52	*X-3742-733-1	CASE (UPPER) ASSY, DI SHIELD	
53	*A-7062-172-A	DI-21 BOARD, COMPLETE	
54	*3-742-821-01	CASE (LOWER), SHIELD, DI	
55	*3-742-828-01	FRAME, CABINET	
56	*X-3742-730-1	PLATE ASSY, SHIELD, DD	
57	3-733-912-01	SCREW (M2X2.5), SPECIAL HEAD	
58	*1-633-600-11	LI-12 BOARD	
59	1-550-104-32	HOLDER, BATTERY	
60	3-742-835-11	COVER	
61	*1-633-593-11	MJ-23 BOARD	
62	3-742-829-01	TABLE, TRIPOD	
63	3-742-743-01	PLATE, BLIND, TRIPOD	
64	*A-7062-059-A	FD-13 BOARD, COMPLETE	
65	1-633-612-11	FP-213 FLEXIBLE BOARD	
66	1-633-613-11	FP-215 FLEXIBLE BOARD	
67	3-742-806-01	KNOB, LEVEL	
68	3-742-805-01	KNOB, BAL	
69	X-3742-709-1	KNOB ASSY, RY	
70	3-742-792-01	KNOB, SHUTTER	
71	3-742-723-01	KNOB, IRIS	

No.	Part No.	Description	Remark
72	3-742-758-01	PLATE, BLIND, IRIS	
73	*3-742-755-01	PLATE, SHIELD, VR	
74	4-356-741-11	SCREW, TAPPING (BIND 2X6)	
75	*1-633-603-11	DK-3 BOARD	
76	3-742-799-01	HOLDER (R), MD	
77	4-356-741-31	SCREW, TAPPING (BIND 2X8)	
78	1-542-138-11	MICROPHONE ASSY, NARATION	79, 80
79	1-542-139-11	CAPSULE (C-1025), MICROPHONE	
80	1-572-213-11	SWITCH, LEAF	
81	*1-633-607-11	LR-11 BOARD	
82	*1-633-606-11	LL-1 BOARD	
83	3-742-801-01	RETAINER, METER	
84	1-520-499-41	METER, LEVEL	
85	3-742-811-01	BRACKET, SP	
86	1-503-293-00	SPEAKER	
87	3-742-886-11	SCREW (M2X6), +B	
88	X-3742-719-1	CABINET (R) SUB ASSY	89-92
89	X-3742-728-1	DOOR ASSY, FUNCTION	90
90	3-742-830-01	DOOR, FUNCTION	
91	3-718-233-01	NUT, PLATE	
92	3-732-705-01	SPRING, LEAF	

5-3. CABINET (UPPER) ASSEMBLY

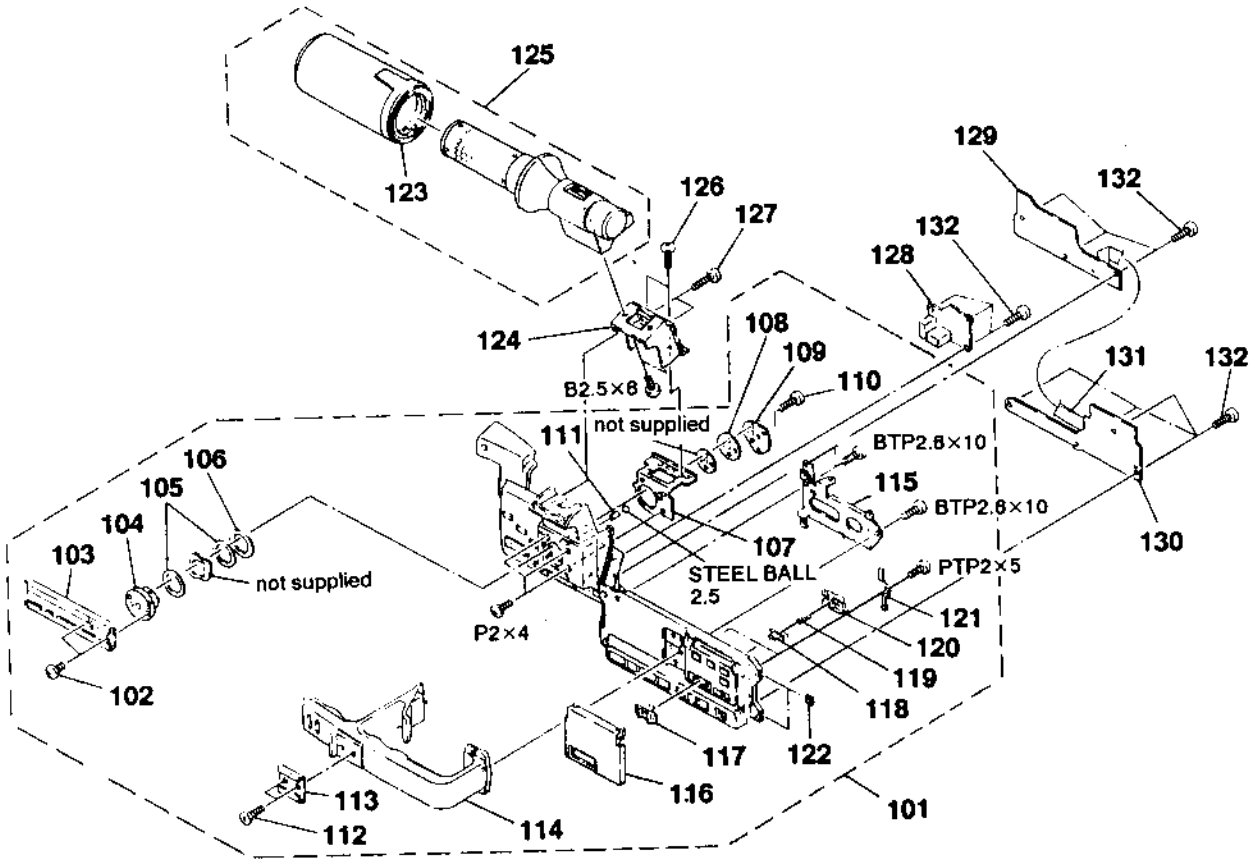

No.	Part No.	Description	Remark
101	X-3742-721-1	CABINET (UPPER) SUB ASSY	102-122
102	3-730-745-11	SCREW (2.6X4), +P	
103	3-742-707-01	SHOE, VF	
104	3-742-836-01	TABLE, ROTARY	
105	3-688-981-01	WASHER, ROTARY TABLE	
106	3-742-716-01	SPACER, DM	
107	3-742-803-01	STOPPER, ROTARY TABLE	
108	3-742-735-01	RETAINER, ROTARY TABLE	
109	3-742-736-01	SPRING	
110	3-730-745-21	SCREW (2.6X6), +P	
111	3-742-748-01	SHAFT (A)	
112	3-742-871-01	SCREW (M2X5)	
113	3-724-511-01	SHOE, ACCESSORY	
114	3-742-827-01	HANDLE	
115	3-742-787-01	BRACKET, HANDLE	
116	3-742-786-01	LID, UPPER	
117	3-718-226-01	BUTTON, POWER	
118	*3-718-257-11	BUTTON, PUSH, POWER	
119	3-303-973-00	SPRING, COMPRESSION	
120	3-718-227-01	PLATE, BLIND, POWER	
121	3-742-715-01	SPRING (U), LEAF	
122	3-718-233-01	NUT, PLATE	
123	X-2536-717-1	SCREEN, WIND	
124	3-742-834-01	HOLDER, MICROPHONE	
125	1-542-137-11	MICROPHONE, STEREO (C-2028)	123
126	3-742-855-01	SCREW (M2X6) (THREE LOCK), +B	
127	4-356-741-31	SCREW, TAPPING (BIND 2X8)	
128	*1-635-605-11	IR-20 BOARD	
129	*1-633-602-11	CK-18 BOARD	
130	*1-633-604-11	VK-2 BOARD	
131	1-575-436-11	WIRE, FLAT TYPE PVC (10 CORE)	
132	4-356-741-11	SCREW, TAPPING (BIND 2X6)	

5-4. MAIN PC BOARD AND CABINET (REAR) ASSEMBLIES

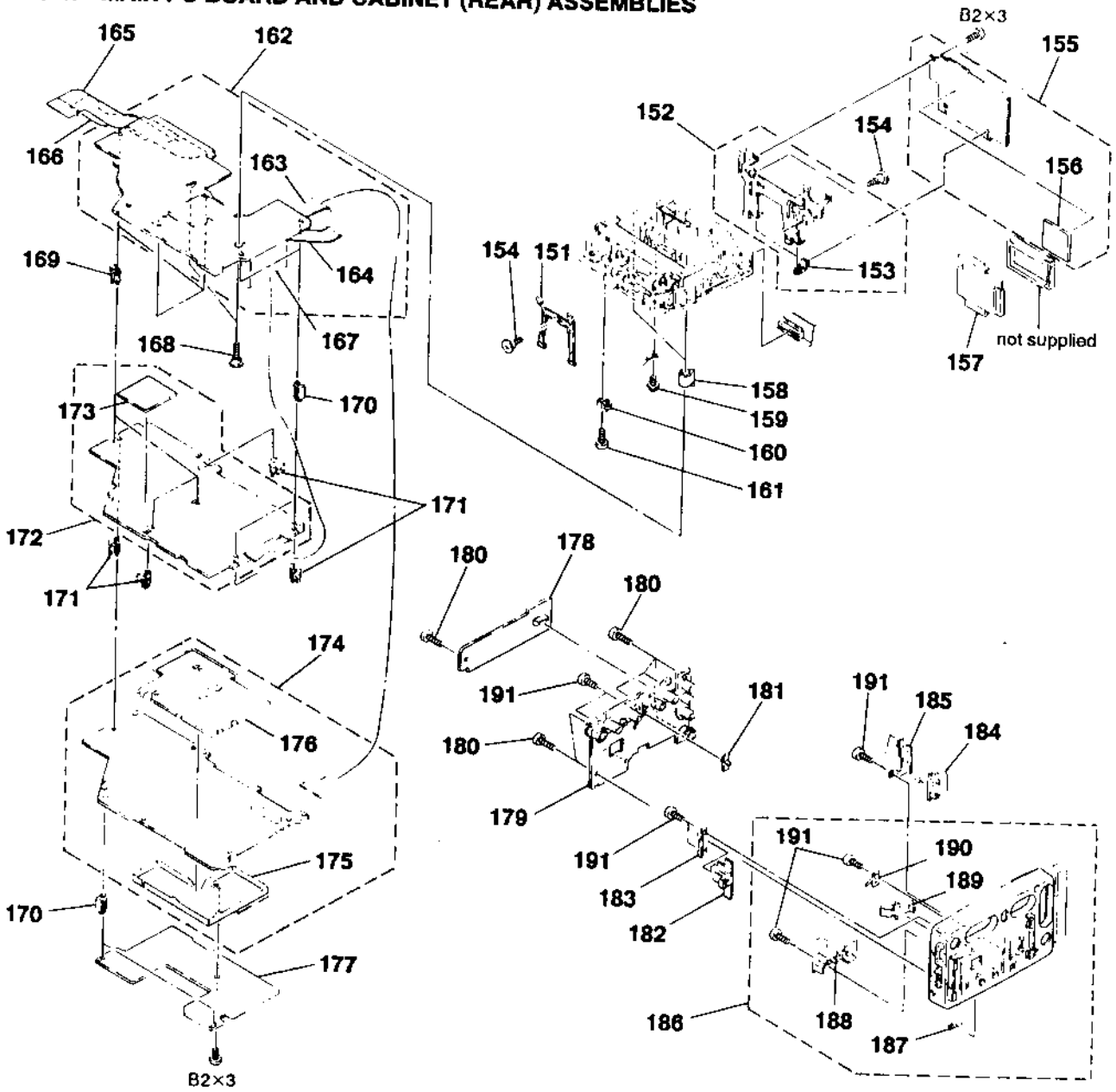

No.	Part No.	Description	Remark
151	X-3742-707-1	FRAME (UPPER) ASSY, MD	
152	X-3742-716-1	FRAME (LOWER) ASSY, MD	153
153	3-742-810-01	HINGE (D), PC BOARD	
154	3-732-791-11	SCREW (M2X3)	
155	*A-7061-981-A	MR-19 BOARD, COMPLETE	156
156	A-7068-142-A	HR-3 BOARD, COMPLETE (HIC)	
157	*3-732-793-01	LID, RP	
158	3-732-767-01	SPACER (B), PC BOARD	
159	3-703-502-01	SCREW	
160	3-732-766-01	SPACER (A), PC BOARD	
161	3-713-790-11	SCREW (M2X5), TAPPING, P3	
162	*A-7061-977-A	SS-95 BOARD, COMPLETE	163, 164
163	1-633-614-11	FP-216 FLEXIBLE BOARD (W002)	
164	1-633-616-11	FP-240 FLEXIBLE BOARD (W004)	
165	1-633-617-11	FP-241 FLEXIBLE BOARD	
166	1-633-618-11	FP-311 FLEXIBLE BOARD	
167	1-629-777-11	FP-203 FLEXIBLE BOARD	
168	3-742-713-01	SCREW (M2X8), TAPPING	
169	3-742-815-01	SUPPORT (S), PC BOARD	
170	3-742-817-01	HINGE (S), PC BOARD	
171	3-742-816-01	SUPPORT (V), PC BOARD	

No.	Part No.	Description	Remark
172	*A-7061-978-A	VI-66 BOARD, COMPLETE	173
173	A-7068-168-A	HD-8 BOARD, COMPLETE (HIC)	
174	*A-7061-979-A	PC-35 BOARD, COMPLETE	175, 176
175	*X-3742-723-1	CASE ASSY, SHIELD, PC	
176	*X-3742-724-1	LID ASSY, PC SHIELD	
177	*A-7061-980-A	AS-22 BOARD, COMPLETE	
178	*1-633-596-11	FU-70 BOARD	
179	*A-7061-982-A	PJ-22 BOARD, COMPLETE	
180	4-356-741-31	SCREW, TAPPING (BIND 2X8)	
181	3-742-714-01	KNOB, AUDIO SELECTION	
182	*1-633-597-11	DC-25 BOARD	
183	*3-742-745-01	BRACKET, DC	
184	1-537-241-61	TERMINAL BOARD (BATTERY)	
185	*3-742-711-01	PLATE, FIXED, TERMINAL	
186	X-3742-713-1	CABINET (REAR) SUB ASSY	187-191
187	4-876-347-01	SPRING, COMPRESSION	
188	3-742-772-01	COVER, BATTERY LOCK	
189	3-742-770-01	LOCK, BATTERY	
190	3-742-712-01	SPRING	
191	4-356-741-11	SCREW, TAPPING (BIND 2X6)	

5-5. MECHANISM CHASSIS ASSEMBLY (1)

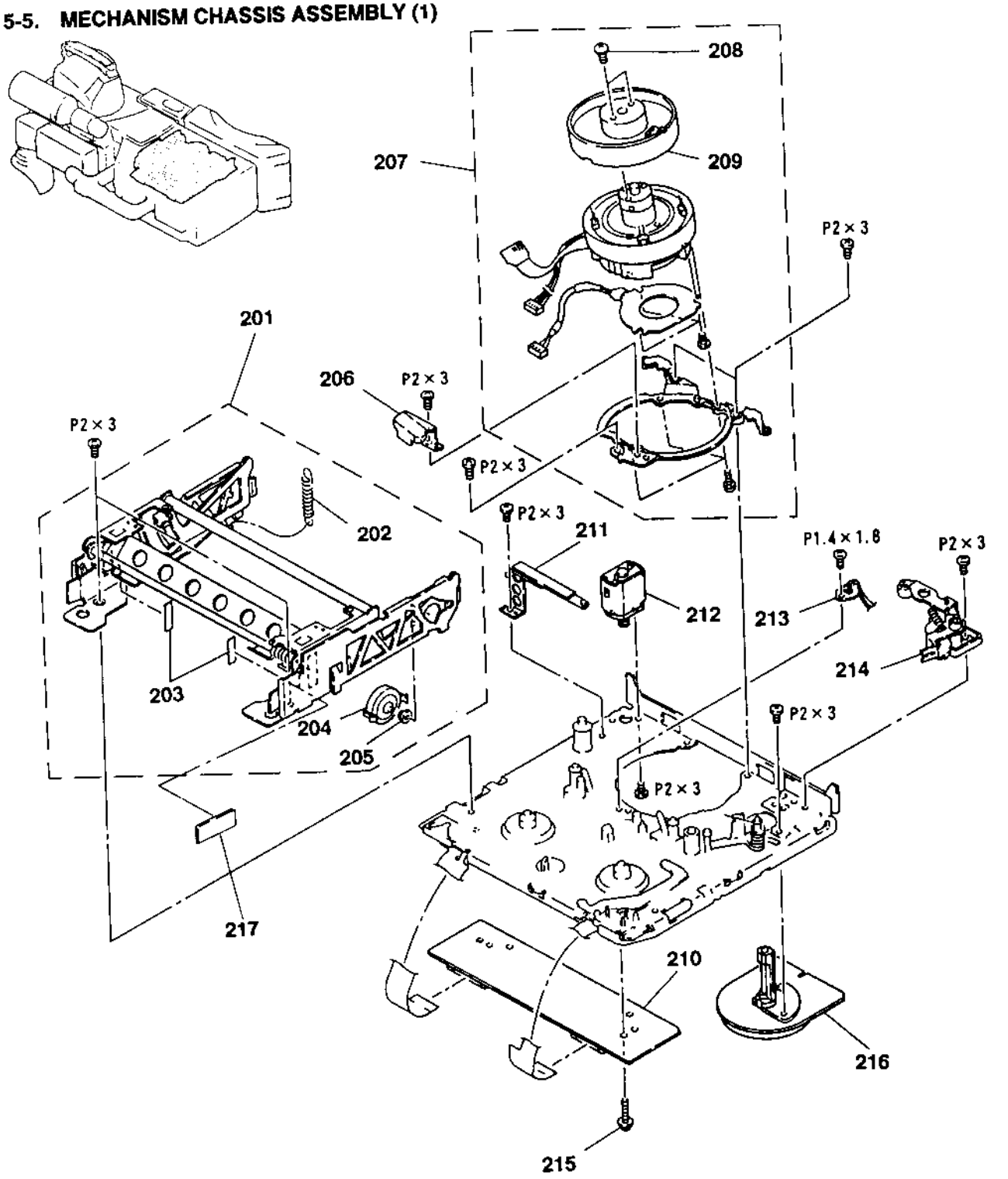

No.	Part No.	Description	Remark
201	X-3728-873-1	CASSETTE COMPARTMENT ASSY	202-205
202	3-728-825-03	SPRING, TENSION	
203	*3-728-829-01	TAPE	
204	3-728-867-02	DAMPER, OIL	
205	3-739-806-02	GEAR (2), DAMPER	
206	3-728-868-01	GUARD, GUIDE	
207	A-7048-335-A	DRUM ASSY (DGU-59A-R)	208, 209
208	3-686-493-01	SCREW (M2X5), P1	
209	A-7049-285-A	DRUM ASSY, UPPER, ROTARY (DGU-59-R)	—
210	*1-633-589-11	CC-27 BOARD	
211	X-3728-864-1	GROUND ASSY, SHAFT	
212	A-7040-160-A	MOTOR ASSY, THREADING (LOADING) (M903)	
213	1-808-505-12	SENSOR (DEW)	
214	A-7040-161-B	ROLLER BLOCK ASSY, HC	
215	3-713-790-11	SCREW (M2X5), TAPPING, P3	
216	8-835-331-01	MOTOR, DC U-22A (CAPSTAN) (M902)	
217	*3-730-176-01	SHEET, MD	

5-6. MECHANISM CHASSIS ASSEMBLY (2)

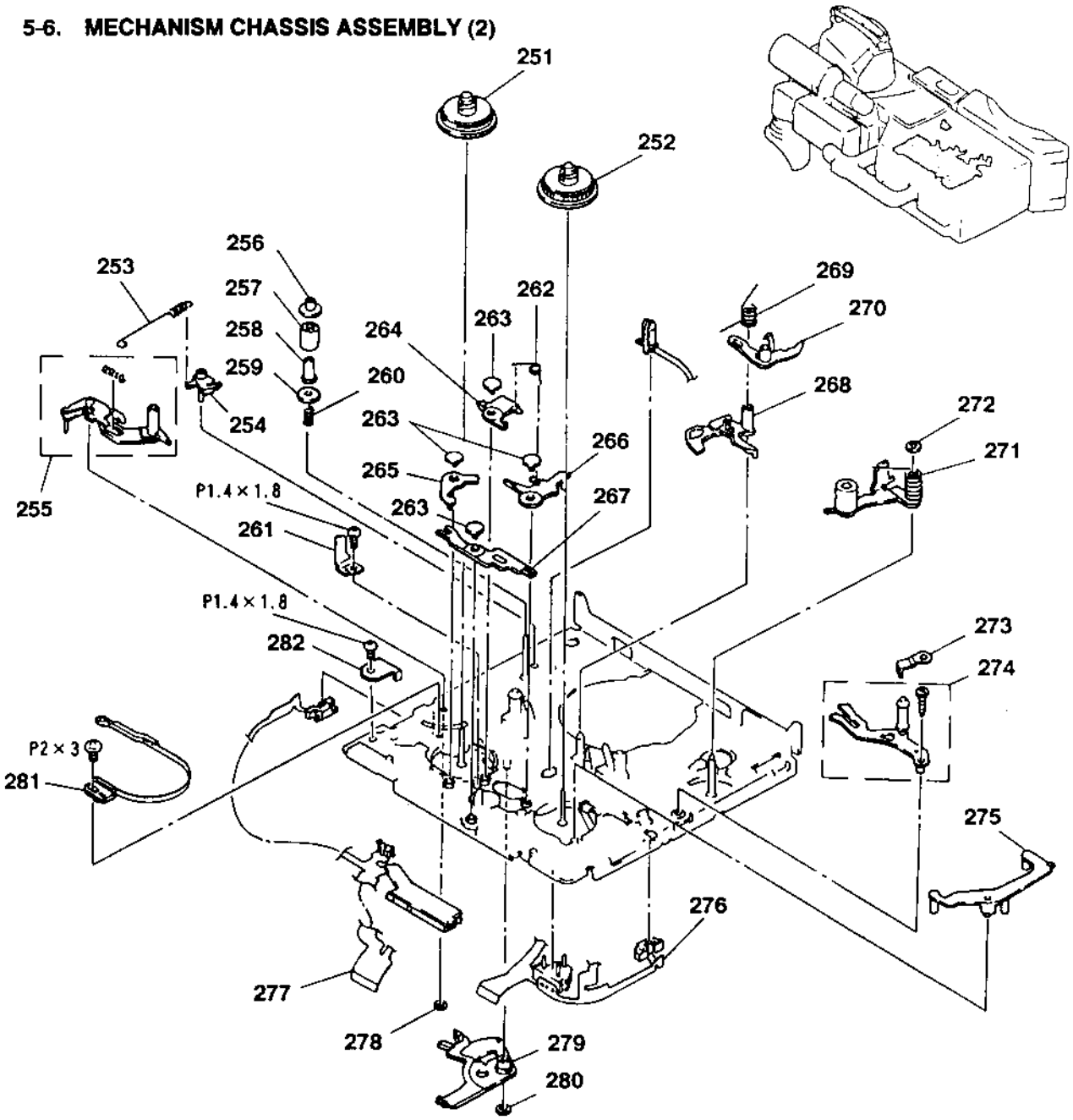

No.	Part No.	Description	Remark
251	X-3728-851-1	TABLE ASSY, REEL, S	
252	X-3728-855-1	TABLE ASSY, REEL, T	
253	3-736-414-01	SPRING, TENSION	
254	3-728-855-03	ARM, ADJUSTMENT	
255	X-3728-867-1	ARM ASSY (S), TENSION REGULATOR	
256	3-726-884-01	FLANGE, UPPER, TG2	
257	3-726-883-01	ROLLER, TG2	
258	3-726-885-01	SLEEVE, TG2	
259	3-726-882-02	FLANGE, LOWER, TG2	
260	3-726-886-01	SPRING, COMPRESSION	
261	3-726-848-01	RETAINER, TL	
262	3-726-866-01	SPRING (ST), TORSION	
263	3-726-858-01	PIN, SHAFT RETAINER	
264	3-728-849-01	BRAKE, S	
265	3-726-852-01	BRAKE, LB	
266	3-728-850-01	BRAKE, T	

No.	Part No.	Description	Remark
267	3-726-853-01	LEVER, LB	
268	3-728-875-01	STOPPER, RK	
269	3-726-864-01	SPRING (RK), TORSION	
270	3-728-852-02	ARM, RK STOPPER	
271	A-7040-219-A	ARM BLOCK ASSY, PINCH	
272	3-669-465-00	WASHER (1.5), STOPPER	
273	3-728-808-01	SPRING, LEAF	
274	X-3728-869-1	ARM ASSY, TG7	
275	3-728-848-01	ARM, LB RELEASE	
276	1-628-061-12	FP-90 FLEXIBLE BOARD	
277	1-628-060-12	FP-89 FLEXIBLE BOARD	
278	3-321-393-11	WASHER, STOPPER	
279	X-3726-806-2	LEVER ASSY, SW	
280	3-726-829-01	WASHER, STOPPER	
281	X-3726-809-2	BAND ASSY, TENSION REGULATOR	
282	3-730-125-01	RETAINER, SW	

5-7. MECHANISM CHASSIS ASSEMBLY (3)

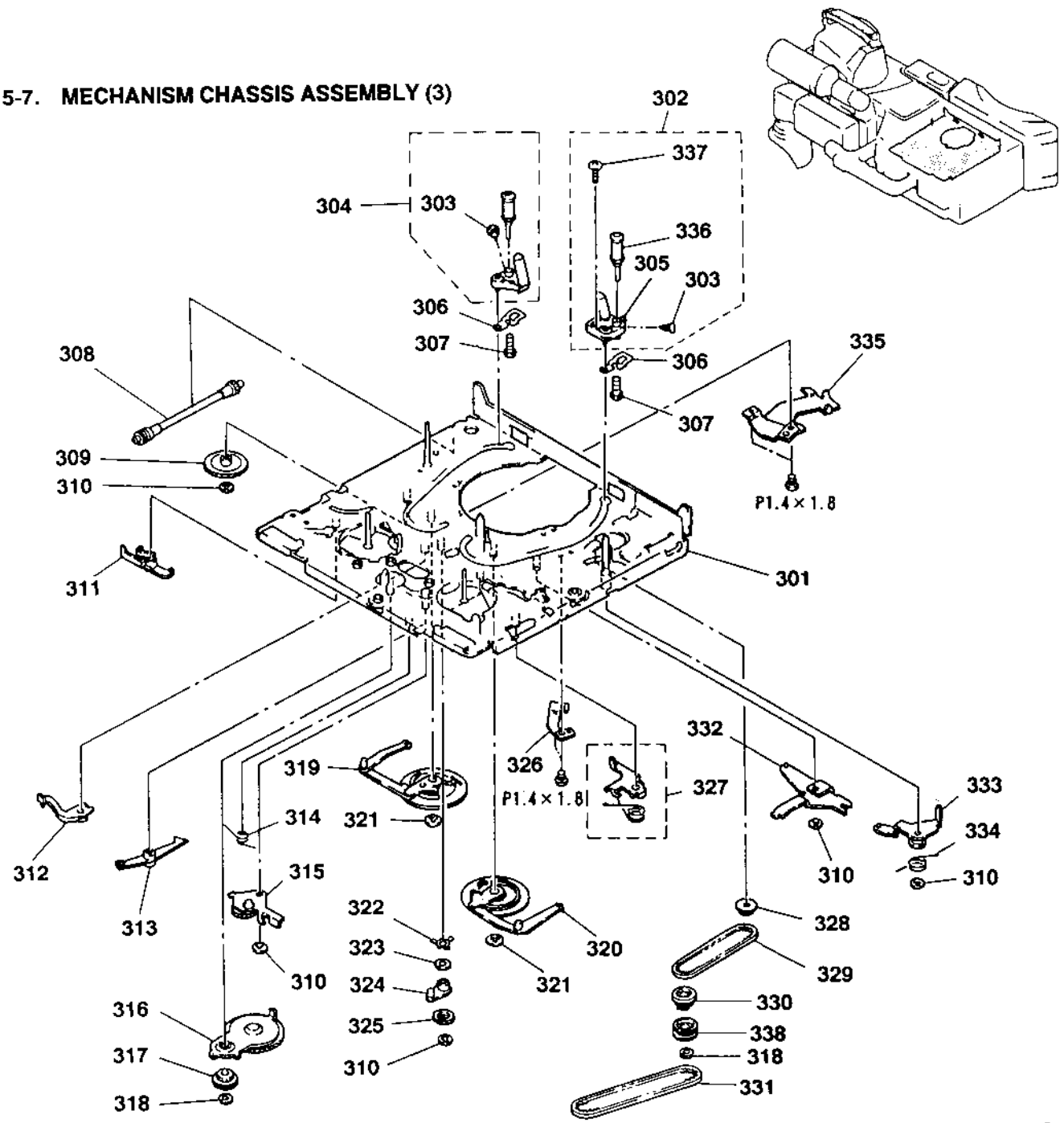

No.	Part No.	Description	Remark
301	*X-3728-801-1	CHASSIS ASSY, MECHANICAL	
302	A-7040-220-A	COASTER-(RIGHT) BLOCK ASSY-NIP	303, 305, 336, 337
303	3-726-822-01	SCREW (M1.4X2) (STEP), HEAD	
304	A-7040-204-A	COASTER (LEFT) BLOCK ASSY	303
305	X-3728-852-1	COASTER (RIGHT) ASSY	
306	3-736-485-01	SPRING, LEAF, COSTER	
307	3-726-830-01	SCREW (M1.4X4) (THREE LOCK)	
308	X-3728-868-1	WORM ASSY	
309	3-744-109-01	GEAR, WHEEL	
310	3-726-829-01	WASHER, STOPPER	
311	3-728-842-01	LEVER, EJECT	
312	3-728-851-01	BRAKE, UL	
313	3-726-854-01	ARM, BRAKE RELEASE	
314	3-726-865-01	SPRING (LB), TORSION	
315	A-7040-130-A	GEAR BLOCK ASSY, LB	
316	X-3728-866-1	GEAR ASSY, RK	
317	X-3728-858-1	GEAR ASSY, RC	
318	3-321-393-11	WASHER, STOPPER	
319	X-3728-842-1	GEAR (LEFT) ASSY, DRIVE	

No.	Part No.	Description	Remark
320	X-3728-843-1	GEAR (RIGHT) ASSY, DRIVE	
321	3-669-465-00	WASHER (1.5), STOPPER	
322	3-726-867-01	SPRING, LEAF	
323	3-701-436-21	WASHER, POLYEHTHYLENE	
324	3-726-857-02	ARM, UL	
325	3-726-856-02	GEAR, UL	
326	*3-726-805-01	REINFORCEMENT (TT)	
327	X-3726-808-2	BRAKE ASSY, TS	
328	X-3726-805-1	GEAR ASSY, JOINT	
329	3-728-866-11	BELT (S), TIMING	
330	X-3726-838-1	PULLEY (UPPER) ASSY, MIDWAY	
331	3-741-197-01	BELT (L), TIMING	
332	3-744-145-01	LEVER, THREADING	
333	X-3726-824-1	ARM ASSY, PINCH SUB	
334	3-726-895-01	SPRING	
335	X-3726-841-1	REINFORCEMENT (SS) ASSY	
336	X-3728-810-1	ROLLER ASSY (U)(PLATING), GUIDE	
337	3-736-473-01	SCREW (M2X0.25) (THREE LOCK)	
338	3-741-196-01	PULLEY (LOWER), BELT MIDWAY	

5-8. CAMERA ASSEMBLY

Be sure to read "Cautions for Replacement of CCD Imager" on page 100 when changing the CCD imager.

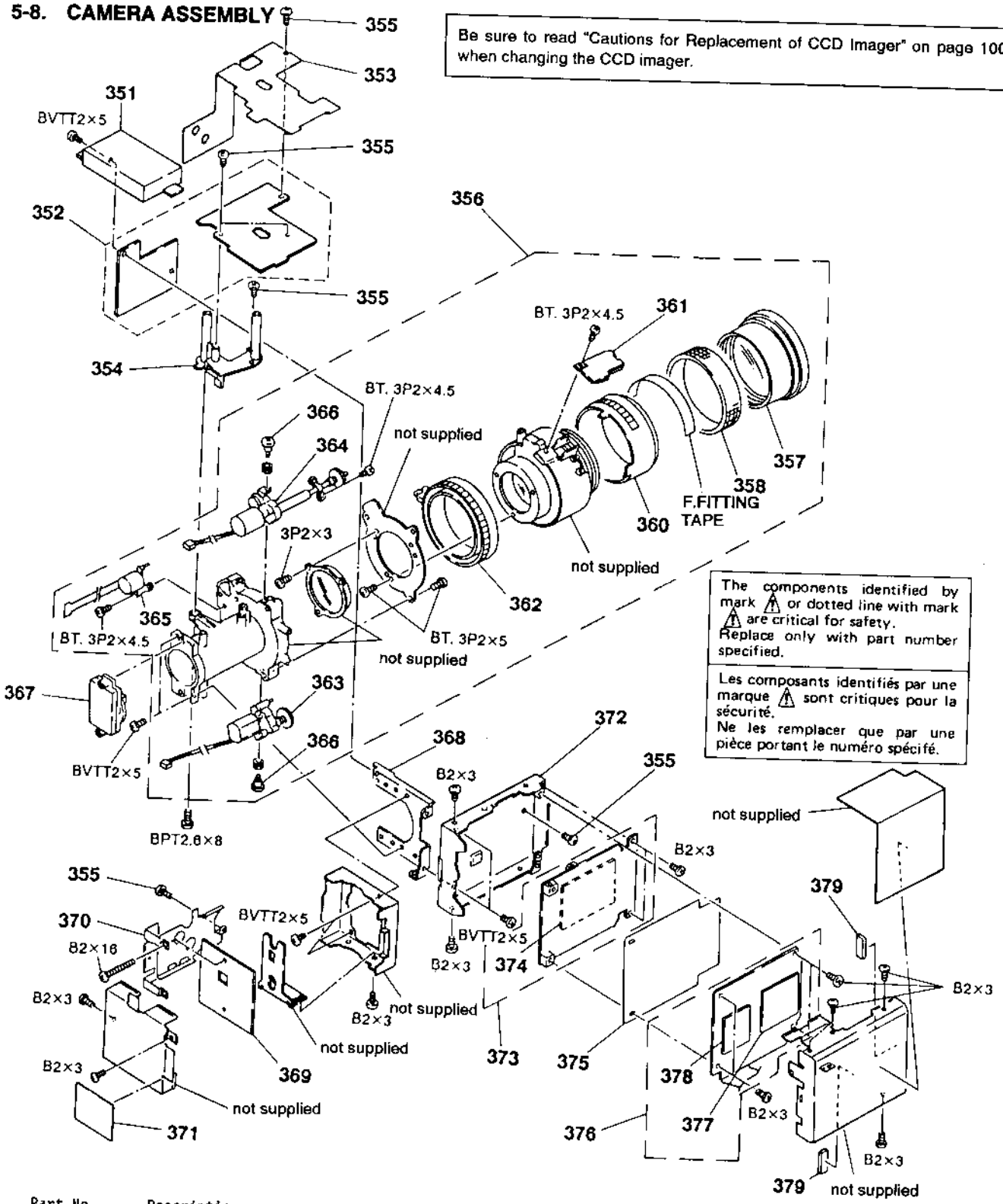

The components identified by mark ⚠ or dotted line with mark ⚠ are critical for safety.
Replace only with part number specified.

Les composants identifiés par une marque ⚠ sont critiques pour la sécurité.
Ne les remplacer que par une pièce portant le numéro spécifié.

No.	Part No.	Description	Remark
351	⚠1-466-063-21	UNIT, DC-DC CONVERTER 1	
352	*A-7030-171-A	AF-DM ASSY	
353	*3-734-482-01	PLATE, SHIELD, FC	
354	3-742-819-01	SUPPORT (S), LENS	
355	3-727-903-01	SCREW (2X5), TAPPING, + B	
356	1-547-334-13	LENS, ZOOM (VCL-1108YB)	357-366
357	3-707-577-01	RING UNIT, F	
358	3-707-575-01	RUBBER, FOCUS	
360	3-707-578-01	SCALE RING, F	
361	3-707-763-01	SENSOR ASSY, F	
362	3-707-582-01	RING ASSY, ZOOM	
363	3-707-580-01	MOTOR ASSY, PZ GEAR (ZOOM)	
364	3-707-576-01	MOTOR ASSY, AF GEAR (FOCUS)	
365	3-707-583-01	METER ASSY, EE (IRIS)	
366	3-707-501-01	SCREW (Z) MOTOR FITTING	
367	8-750-011-83	IU022BN-10C (CCD IMAGER)	
368	*3-732-773-01	BRACKET, CCD	
369	*A-7071-007-A	CD-13 BOARD, COMPLETE	
370	*3-734-421-01	HEAT SINK, CD	
371	*3-734-481-01	PLATE	
372	*X-3732-708-1	CASE ASSY, SHIELD, CAMERA	
373	*A-7062-068-A	VC-54 BOARD, COMPLETE	374
374	A-7068-143-A	DT-73B BOARD, COMPLETE (HIC)	
375	*3-734-467-01	PLATE, SHIELD, VC	
376	*A-7062-069-A	VC-55 BOARD, COMPLETE	377, 378
377	A-7068-144-A	MX-7 BOARD, COMPLETE (HIC)	
378	A-7068-145-A	CP-20 BOARD, COMPLETE (HIC)	
379	*3-734-418-01	PROTECTOR, HIC	

5-9. EVF ASSEMBLY

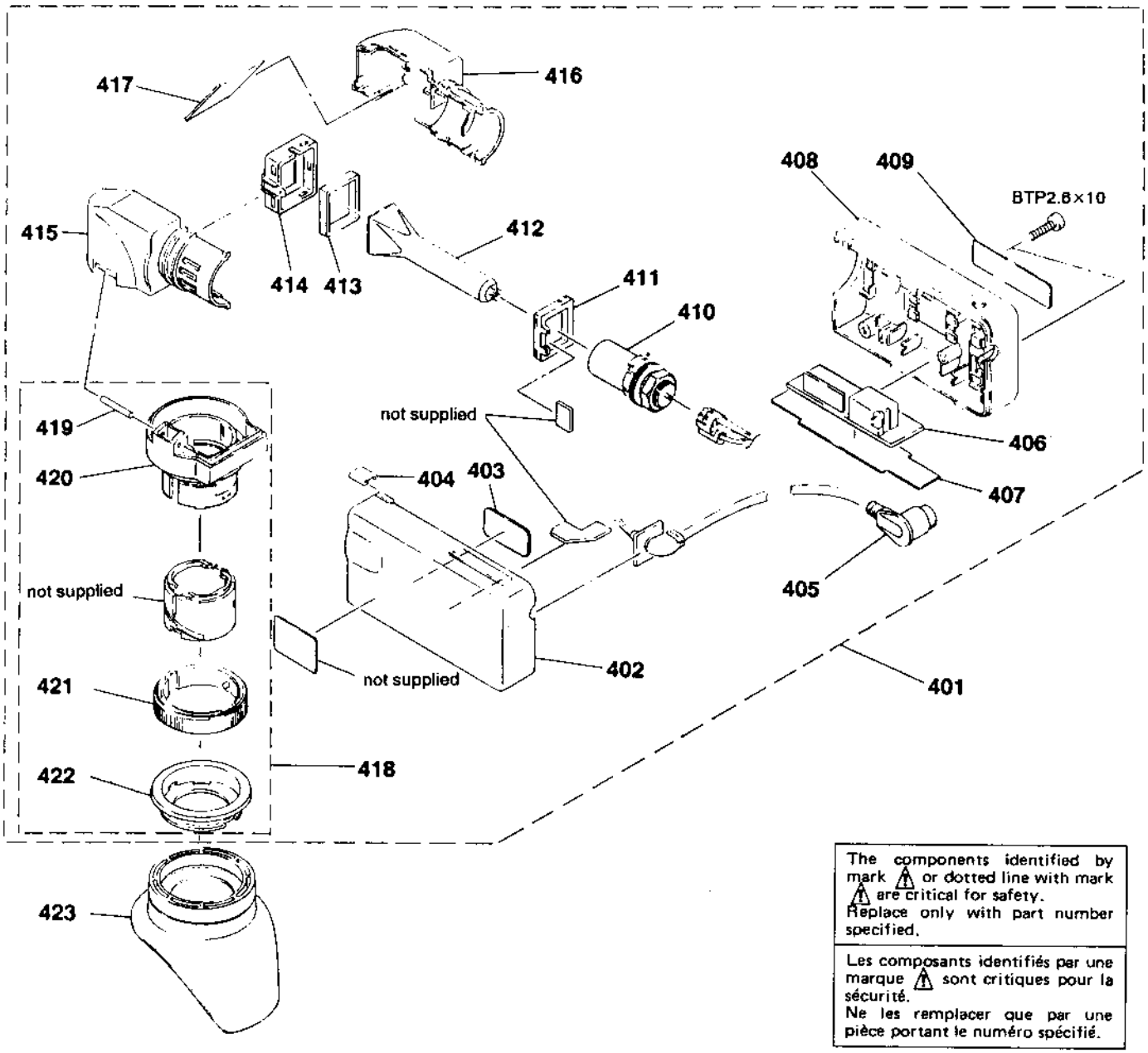

The components identified by mark ⚠ or dotted line with mark ⚠ are critical for safety.
Replace only with part number specified.

Les composants identifiés par une marque ⚠ sont critiques pour la sécurité.
Ne les remplacer que par une pièce portant le numéro spécifié.

No.	Part No.	Description	Remark
401	A-7019-204-A	VF-263 ASSY	402-422
402	X-3742-701-1	CASE (UPPER) ASSY, VF	
403	*3-704-233-01	LABEL, CAUTION, HIGH VOLTAGE (US/Canadian MODEL)	
404	3-742-709-01	PLATE, ORNAMENTAL	
405	1-575-441-11	CORD, CONNECTION (WITH 8P PLUG)	
406	*A-7062-060-A	VF-13 BOARD, COMPLETE	
407	*3-742-752-01	INSULATOR, VF	
408	X-3742-712-1	CASE (LOWER) ASSY, VF	
409	*3-742-885-01	LABEL, MODEL NUMBER, EVF (U/C)	
410	⚠1-451-357-12	DEFLECTION YOKE	
411	3-742-767-01	RETAINER, CRT	
412	⚠1-546-084-11	CATHODE-RAY TUBE, B/W (C1M50P45) (V901)	
413	3-742-705-01	BUSHING, CRT	
414	X-3742-711-1	COVER ASSY, CRT	
415	X-3742-703-1	HOLDER (UPPER) ASSY, CRT	
416	X-3742-704-1	HOLDER (LOWER) ASSY, CRT	
417	3-742-710-01	MIRROR, REFLECTION	
418	A-7091-150-A	TABLE ASSY, LENS	419-422
419	3-742-740-01	SHAFT, ROTARY	
420	3-742-822-01	TABLE, LENS	
421	3-742-766-01	RING, ADJUSTMENT	
422	3-742-769-01	HOLDER, EYE CUP	
423	3-742-804-01	EYE CUP	

CCD-V5000

SERVICE MANUAL

US Model
Canadian Model
E Model

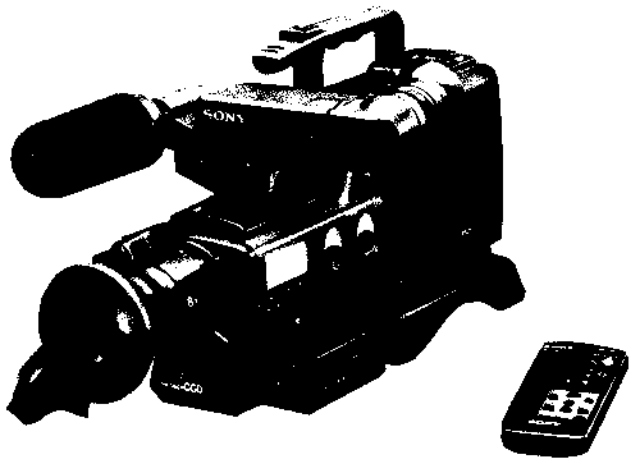

Hi8 PRO

U MECHANISM

For MECHANISM ADJUSTMENTS, refer to the "8 mm Video MECHANICAL ADJUSTMENT MANUAL Ⅲ" (9-972-732-11).

SPECIFICATIONS

System

Video recording system	Rotary two heads, Helical scanning FM system
Audio recording system	Standard: Rotary head, FM system (2 channels)
	PCM: PCM system (2 channels)
Video signal	NTSC color, EIA standards
Usable cassette	8 mm video format cassette
Tape speed	SP: Approx. 1.43 cm/sec.
	LP: Approx. 0.72 cm/sec. (playback only)
Recording time	SP mode: 2 hours (E6/P6 – 120)
Playback time	SP mode: 2 hours
	LP mode: 4 hours (E6/P6 – 120)
Fast forward/rewind time	Approx. 7 min. (E6/P6 – 120)
Image device	CCD (Charge Coupled Device)
Viewfinder	Electronic viewfinder (black and white)
Lens	Combined 8 × power zoom lens
	f = 11 – 88 mm, F1.4 with macro
	Filter diameter: 52 mm
Auto focus system	TTL
Color temperature	Auto: One push white balance
	INDOOR 3,200 K
	OUTDOOR 5,800 K
Minimum illumination	2 lux (F1.4)
Illumination range	2 lux – 100,000 lux (0.2 – 9,294 footcandles)
Recommended illumination	More than 100 lux (9.3 footcandles)
Aperture correction	Automatic, manual (variable)

PCM

Sampling frequency	31.5 kHz
Audio frequency	20 Hz – 15 kHz
Dynamic range	More than 85 dB
Wow and flutter	Less than 0.005% RMS

Input and output connector

Video output	Phono jack, 1 Vp-p, 75 ohms unbalanced, sync negative

– Continued on next page –

- **SERVICE OF REMOTE COMMANDER RMT-500**

Remote commander RMT-500 is available as a unit. But as individual parts the battery case lid of commander is only avalable.

MICROFILM

8 VIDEO CAMERA RECORDER

SONY®

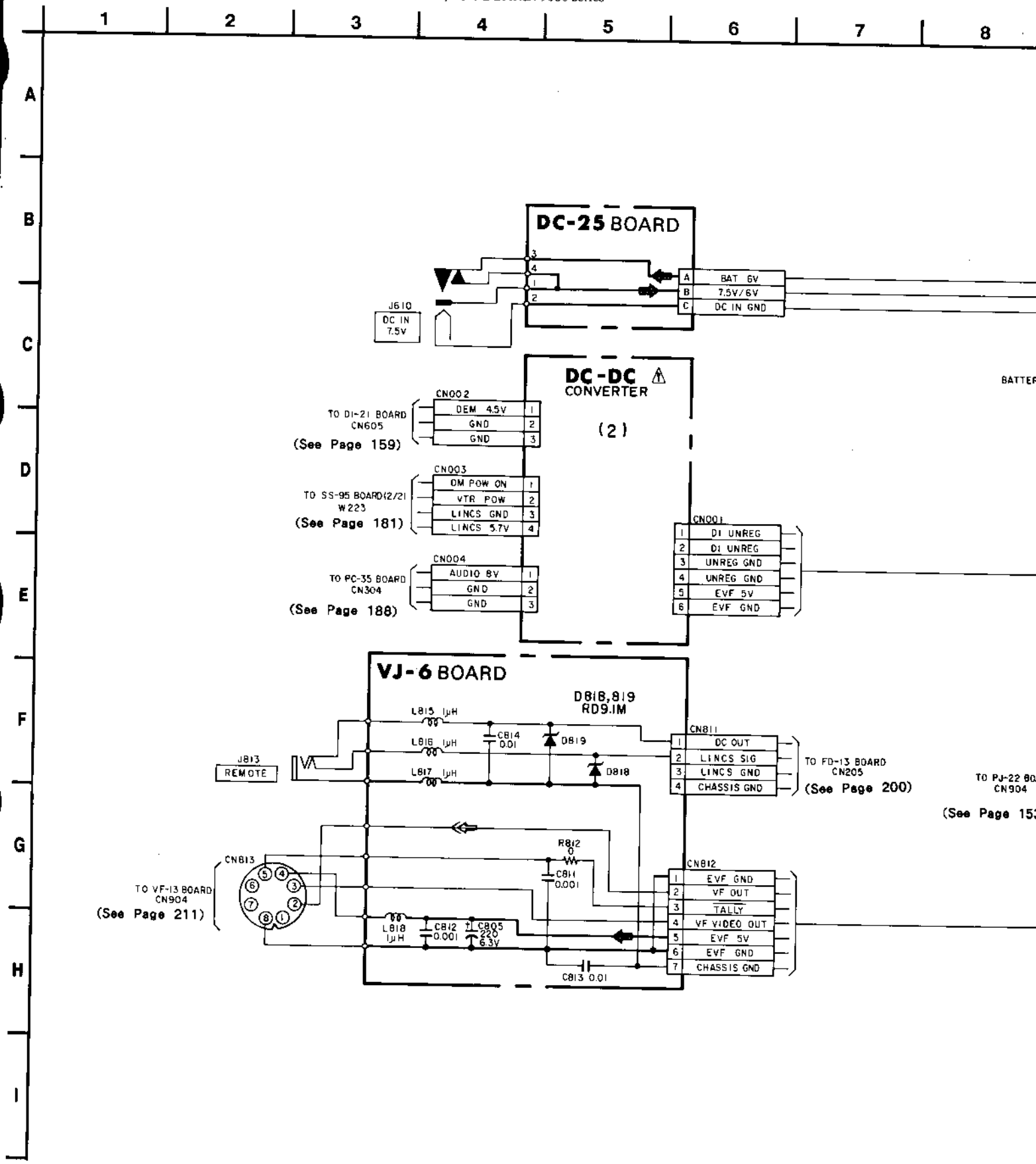
1
2
3
4
5
6
7
8
A
B
C
D
E
F
G
H
I
DC-25 BOARD
J610
DC IN 7.5V
A BAT 6V
B 7.5V/6V
C DC IN GND
DC-DC CONVERTER
(2)
CN002
DEM 4.5V
GND
GND
TO DI-21 BOARD CN605
(See Page 159)
CN003
DM POW ON
VTR POW
LINCS GND
LINCS 5.7V
TO SS-95 BOARD(2/2) W223
(See Page 181)
CN004
AUDIO 8V
GND
GND
TO PC-35 BOARD CN304
(See Page 188)
CN001
DI UNREG
DI UNREG
UNREG GND
UNREG GND
EVF 5V
EVF GND
BATTER
VJ-6 BOARD
D818,819 RD9.1M
L815 1µH
L816 1µH
L817 1µH
C814 0.01
D819
D818
J813 REMOTE
CN811
DC OUT
LINCS SIG
LINCS GND
CHASSIS GND
TO FD-13 BOARD CN205
(See Page 200)
TO PJ-22 BO CN904
(See Page 153
R812 0
C811 0.001
CN813
TO VF-13 BOARD CN904
(See Page 211)
L818 1µH
C812 0.001
C805 220 6.3V
C813 0.01
CN812
EVF GND
VF OUT
TALLY
VF VIDEO OUT
EVF 5V
EVF GND
CHASSIS GND

8 | 9 | 10 | 11 | 12 | 13 | 14 | 15

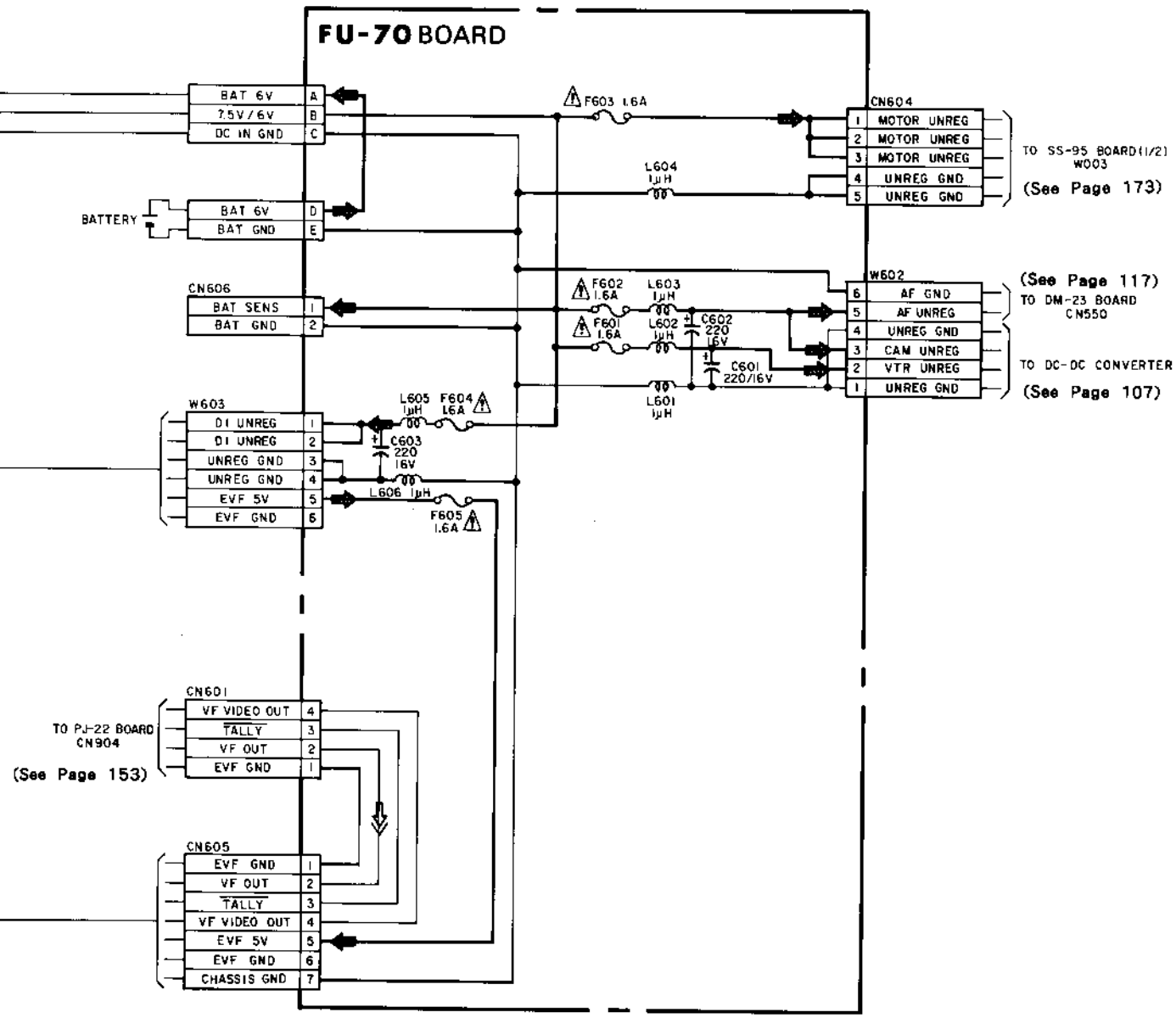

• **SIGNAL PATH**

	VIDEO SIGNAL			AUDIO SIGNAL
	CHROMA	Y	Y/CHROMA/DATA	
REC				
PB		⇨		

VI-66

Ref.No	Part No.	Description		Remark
	*A-7061-978-A	VI-66 BOARD, COMPLETE (Ref.No 4,000 Series) **********		
	A-7068-168-A	HD-8 (HIC) BOARD, COMPLETE		
		CAPACITOR		
C251	1-162-974-11	CERAMIC CHIP 0.01MF		50V
C252	1-124-778-00	ELECT CHIP 22MF	20%	6.3V
C253	1-163-035-00	CERAMIC CHIP 0.047MF		50V
C254	1-162-955-11	CERAMIC CHIP 150PF	5%	50V
C255	1-162-951-11	CERAMIC CHIP 68PF	5%	50V
C259	1-162-938-11	CERAMIC CHIP 7PF	0.5PF	50V
C260	1-162-952-11	CERAMIC CHIP 82PF	5%	50V
C262	1-162-950-11	CERAMIC CHIP 56PF	5%	50V
C264	1-162-974-11	CERAMIC CHIP 0.01MF		50V
C265	1-162-974-11	CERAMIC CHIP 0.01MF		50V
C266	1-162-974-11	CERAMIC CHIP 0.01MF		50V
C267	1-162-974-11	CERAMIC CHIP 0.01MF		50V
C268	1-162-974-11	CERAMIC CHIP 0.01MF		50V
C269	1-162-974-11	CERAMIC CHIP 0.01MF		50V
C270	1-162-974-11	CERAMIC CHIP 0.01MF		50V
C271	1-135-157-21	TANTAL. CHIP 10MF	20%	6.3V
C272	1-162-974-11	CERAMIC CHIP 0.01MF		50V
C273	1-162-974-11	CERAMIC CHIP 0.01MF		50V
C274	1-162-974-11	CERAMIC CHIP 0.01MF		50V
C275	1-162-954-11	CERAMIC CHIP 120PF	5%	50V
C276	1-162-951-11	CERAMIC CHIP 68PF	5%	50V
C277	1-163-035-00	CERAMIC CHIP 0.047MF		50V
C278	1-162-974-11	CERAMIC CHIP 0.01MF		50V
C279	1-162-974-11	CERAMIC CHIP 0.01MF		50V
C402	1-162-974-11	CERAMIC CHIP 0.01MF		50V
C403	1-163-809-11	CERAMIC CHIP 0.047MF	10%	25V
C405	1-162-974-11	CERAMIC CHIP 0.01MF		50V
C406	1-135-149-21	TANTAL. CHIP 2.2MF	20%	6.3V
C407	1-163-038-00	CERAMIC CHIP 0.1MF		25V
C408	1-135-149-21	TANTAL. CHIP 2.2MF	20%	6.3V
C409	1-163-038-00	CERAMIC CHIP 0.1MF		25V
C411	1-162-974-11	CERAMIC CHIP 0.01MF		50V
C412	1-163-038-00	CERAMIC CHIP 0.1MF		25V
C413	1-135-155-21	TANTAL. CHIP 4.7MF	20%	10V
C414	1-162-974-11	CERAMIC CHIP 0.01MF		50V
C415	1-162-970-11	CERAMIC CHIP 0.01MF	10%	25V
C416	1-163-009-11	CERAMIC CHIP 0.001MF	10%	50V
C417	1-162-997-11	CERAMIC CHIP 10PF	0.5PF	50V
C418	1-163-123-00	CERAMIC CHIP 180PF	5%	50V
C419	1-162-962-11	CERAMIC CHIP 470PF	10%	50V
C420	1-162-974-11	CERAMIC CHIP 0.01MF		50V
C421	1-162-974-11	CERAMIC CHIP 0.01MF		50V
C422	1-135-159-21	TANTAL. CHIP 10MF	20%	16V
C426	1-163-141-00	CERAMIC CHIP 0.001MF	5%	50V
C427	1-135-180-21	TANTAL. CHIP 3.3MF	20%	6.3V
C428	1-135-157-21	TANTAL. CHIP 10MF	20%	4V
C429	1-162-974-11	CERAMIC CHIP 0.01MF		50V
C430	1-135-155-21	TANTAL. CHIP 4.7MF	20%	10V
C431	1-163-035-00	CERAMIC CHIP 0.047MF		50V
C432	1-162-910-11	CERAMIC CHIP 5PF	0.25PF	50V
C433	1-162-923-11	CERAMIC CHIP 47PF	5%	50V
C434	1-135-149-21	TANTAL. CHIP 2.2MF	20%	6.3V
C435	1-163-131-00	CERAMIC CHIP 390PF	5%	50V
C436	1-163-129-00	CERAMIC CHIP 330PF	5%	50V
C437	1-163-121-00	CERAMIC CHIP 150PF	5%	50V
C438	1-163-121-00	CERAMIC CHIP 150PF	5%	50V
C439	1-162-964-11	CERAMIC CHIP 0.001MF	10%	50V
C440	1-163-038-00	CERAMIC CHIP 0.1MF		25V
C441	1-163-010-11	CERAMIC CHIP 0.0012MF	10%	50V
C442	1-135-180-21	TANTAL. CHIP 3.3MF	20%	6.3V
C443	1-163-035-00	CERAMIC CHIP 0.047MF		50V
C444	1-135-155-21	TANTAL. CHIP 4.7MF	20%	10V
C445	1-163-809-11	CERAMIC CHIP 0.047MF	10%	25V
C447	1-135-155-21	TANTAL. CHIP 4.7MF	20%	10V
C448	1-135-162-21	TANTAL. CHIP 33MF	20%	4V
C449	1-163-035-00	CERAMIC CHIP 0.047MF		50V
C450	1-162-951-11	CERAMIC CHIP 68PF	5%	50V
C452	1-126-603-11	ELECT CHIP 4.7MF	20%	35V
C453	1-163-035-00	CERAMIC CHIP 0.047MF		50V
C454	1-126-603-11	ELECT CHIP 4.7MF	20%	35V
C456	1-135-155-21	TANTAL. CHIP 4.7MF	20%	10V
C457	1-163-035-00	CERAMIC CHIP 0.047MF		50V
C458	1-163-035-00	CERAMIC CHIP 0.047MF		50V
C459	1-131-388-00	TANTALUM 68MF	10%	6.3V
C460	1-135-155-21	TANTAL. CHIP 4.7MF	20%	10V
C461	1-163-035-00	CERAMIC CHIP 0.047MF		50V
C462	1-162-974-11	CERAMIC CHIP 0.01MF		50V
C463	1-162-964-11	CERAMIC CHIP 0.001MF	10%	50V
C464	1-163-038-00	CERAMIC CHIP 0.1MF		25V
C465	1-163-035-00	CERAMIC CHIP 0.047MF		50V
C466	1-163-005-11	CERAMIC CHIP 470PF	10%	50V
C467	1-163-038-00	CERAMIC CHIP 0.1MF		25V
C468	1-163-035-00	CERAMIC CHIP 0.047MF		50V
C469	1-135-157-21	TANTAL. CHIP 10MF	20%	4V
C470	1-135-157-21	TANTAL. CHIP 10MF	20%	4V
C471	1-135-072-21	TANTAL. CHIP 0.22MF	20%	35V
C472	1-163-129-00	CERAMIC CHIP 330PF	5%	50V
C473	1-162-953-11	CERAMIC CHIP 100PF	5%	50V
C475	1-126-207-11	ELECT CHIP 33MF	20%	4V
C476	1-162-944-11	CERAMIC CHIP 18PF	5%	50V
C478	1-163-135-00	CERAMIC CHIP 560PF	5%	50V
C479	1-163-038-00	CERAMIC CHIP 0.1MF		25V
C480	1-163-038-00	CERAMIC CHIP 0.1MF		25V
C481	1-162-951-11	CERAMIC CHIP 68PF	5%	50V
C482	1-162-948-11	CERAMIC CHIP 39PF	5%	50V
C483	1-163-129-00	CERAMIC CHIP 330PF	5%	50V
C486	1-135-155-21	TANTAL. CHIP 4.7MF	20%	10V
C487	1-163-035-00	CERAMIC CHIP 0.047MF		50V
C488	1-135-155-21	TANTAL. CHIP 4.7MF	20%	10V
C489	1-163-035-00	CERAMIC CHIP 0.047MF		50V
C493	1-163-035-00	CERAMIC CHIP 0.047MF		50V
C494	1-163-035-00	CERAMIC CHIP 0.047MF		50V

When indicating parts by reference number, please include the board name.

Ref.No	Part No.	Description		Remark
C495	1-162-917-11	CERAMIC CHIP 15PF	5%	50V
C496	1-162-944-11	CERAMIC CHIP 18PF	5%	50V
C497	1-162-946-11	CERAMIC CHIP 27PF	5%	50V
C498	1-163-035-00	CERAMIC CHIP 0.047MF		50V
C499	1-162-974-11	CERAMIC CHIP 0.01MF		50V
C500	1-162-974-11	CERAMIC CHIP 0.01MF		50V
C501	1-162-974-11	CERAMIC CHIP 0.01MF		50V
C502	1-162-974-11	CERAMIC CHIP 0.01MF		50V
C505	1-164-232-11	CERAMIC CHIP 0.01MF	10%	50V
C506	1-163-009-11	CERAMIC CHIP 0.001MF	10%	50V
C507	1-162-921-11	CERAMIC CHIP 33PF	5%	50V
C512	1-162-941-11	CERAMIC CHIP 10PF	0.5PF	50V
C513	1-163-035-00	CERAMIC CHIP 0.047MF		50V
C515	1-162-974-11	CERAMIC CHIP 0.01MF		50V
C516	1-162-955-11	CERAMIC CHIP 150PF	5%	50V
C517	1-162-956-11	CERAMIC CHIP 180PF	5%	50V
C518	1-162-974-11	CERAMIC CHIP 0.01MF		50V
C519	1-163-035-00	CERAMIC CHIP 0.047MF		50V
C520	1-163-035-00	CERAMIC CHIP 0.047MF		50V
C522	1-162-945-11	CERAMIC CHIP 22PF	5%	50V
C524	1-162-944-11	CERAMIC CHIP 18PF	5%	50V
C525	1-163-133-00	CERAMIC CHIP 470PF	5%	50V
C526	1-135-181-21	TANTAL. CHIP 4.7MF	20%	6.3V
C527	1-163-038-00	CERAMIC CHIP 0.1MF		25V
C528	1-163-038-00	CERAMIC CHIP 0.1MF		25V
C529	1-163-131-00	CERAMIC CHIP 390PF	5%	50V
C532	1-162-944-11	CERAMIC CHIP 18PF	5%	50V
C533	1-163-809-11	CERAMIC CHIP 0.047MF	10%	25V
C534	1-162-974-11	CERAMIC CHIP 0.01MF		50V
C535	1-162-970-11	CERAMIC CHIP 0.01MF	10%	25V
C536	1-162-970-11	CERAMIC CHIP 0.01MF	10%	25V
C537	1-163-038-00	CERAMIC CHIP 0.1MF		25V
C538	1-162-954-11	CERAMIC CHIP 120PF	5%	50V
C540	1-162-950-11	CERAMIC CHIP 56PF	5%	50V
C541	1-164-232-11	CERAMIC CHIP 0.01MF	10%	50V
C542	1-163-038-00	CERAMIC CHIP 0.1MF		25V
C543	1-162-956-11	CERAMIC CHIP 180PF	5%	50V
C545	1-162-964-11	CERAMIC CHIP 0.001MF	10%	50V
C601	1-162-949-11	CERAMIC CHIP 47PF	5%	50V
C602	1-164-182-11	CERAMIC CHIP 0.0033MF	10%	50V
C603	1-126-603-11	ELECT CHIP 4.7MF	20%	35V
C604	1-162-974-11	CERAMIC CHIP 0.01MF		50V
C605	1-163-003-11	CERAMIC CHIP 330PF	10%	50V
C607	1-163-009-11	CERAMIC CHIP 0.001MF	10%	50V
C608	1-163-035-00	CERAMIC CHIP 0.047MF		50V
C609	1-163-117-00	CERAMIC CHIP 100PF	5%	50V
C610	1-163-115-00	CERAMIC CHIP 82PF	5%	50V
C611	1-135-091-00	TANTAL. CHIP 1MF	20%	16V
C612	1-162-974-11	CERAMIC CHIP 0.01MF		50V
C613	1-163-037-11	CERAMIC CHIP 0.022MF	10%	25V
C614	1-135-072-21	TANTAL. CHIP 0.22MF	20%	35V
C615	1-135-149-21	TANTAL. CHIP 2.2MF	20%	6.3V
C616	1-163-009-11	CERAMIC CHIP 0.001MF	10%	50V
C617	1-163-035-00	CERAMIC CHIP 0.047MF		50V
C620	1-162-964-11	CERAMIC CHIP 0.001MF	10%	50V
C621	1-163-037-11	CERAMIC CHIP 0.022MF	10%	25V
C622	1-135-170-21	TANTAL. CHIP 6.8MF	20%	4V
C623	1-162-974-11	CERAMIC CHIP 0.01MF		50V
C624	1-135-149-21	TANTAL. CHIP 2.2MF	20%	6.3V
C625	1-162-961-11	CERAMIC CHIP 330PF	10%	50V
C626	1-162-961-11	CERAMIC CHIP 330PF	10%	50V
C627	1-163-009-11	CERAMIC CHIP 0.001MF	10%	50V
C628	1-162-917-11	CERAMIC CHIP 15PF	5%	50V
C629	1-163-109-00	CERAMIC CHIP 47PF	5%	50V
C630	1-135-073-00	TANTAL. CHIP 0.33MF	20%	35V
C631	1-163-038-00	CERAMIC CHIP 0.1MF		25V
C632	1-162-950-11	CERAMIC CHIP 56PF	5%	50V
C633	1-163-117-00	CERAMIC CHIP 100PF	5%	50V
C634	1-162-957-11	CERAMIC CHIP 220PF	5%	50V
C635	1-162-951-11	CERAMIC CHIP 68PF	5%	50V
C637	1-164-232-11	CERAMIC CHIP 0.01MF		50V
C638	1-163-009-11	CERAMIC CHIP 0.001MF	10%	50V
C639	1-135-149-21	TANTAL. CHIP 2.2MF	20%	6.3V
C640	1-163-009-11	CERAMIC CHIP 0.001MF	10%	50V
C641	1-135-149-21	TANTAL. CHIP 2.2MF	20%	6.3V
C642	1-164-232-11	CERAMIC CHIP 0.01MF		50V
C643	1-135-181-21	TANTAL. CHIP 4.7MF	20%	6.3V
C644	1-162-951-11	CERAMIC CHIP 68PF	5%	50V
C645	1-164-232-11	CERAMIC CHIP 0.01MF		50V
C647	1-163-003-11	CERAMIC CHIP 330PF	10%	50V
C648	1-162-947-11	CERAMIC CHIP 33PF	5%	50V
C649	1-162-974-11	CERAMIC CHIP 0.01MF		50V
C650	1-162-974-11	CERAMIC CHIP 0.01MF		50V
C666	1-162-961-11	CERAMIC CHIP 330PF	10%	50V
C667	1-162-953-11	CERAMIC CHIP 100PF	5%	50V
C668	1-162-961-11	CERAMIC CHIP 330PF	10%	50V
C671	1-162-974-11	CERAMIC CHIP 0.01MF		50V
C672	1-162-963-11	CERAMIC CHIP 680PF	10%	50V
C676	1-164-232-11	CERAMIC CHIP 0.01MF		50V
C677	1-164-232-11	CERAMIC CHIP 0.01MF		50V
C678	1-164-232-11	CERAMIC CHIP 0.01MF		50V
C679	1-162-974-11	CERAMIC CHIP 0.01MF		50V
C680	1-162-953-11	CERAMIC CHIP 100PF	5%	50V
C682	1-124-778-00	ELECT CHIP 22MF	20%	6.3V
C683	1-124-778-00	ELECT CHIP 22MF	20%	6.3V
C684	1-126-603-11	ELECT CHIP 4.7MF	20%	35V
C685	1-163-093-00	CERAMIC CHIP 10PF	5%	50V
C686	1-163-101-00	CERAMIC CHIP 22PF	5%	50V
C687	1-135-170-21	TANTAL. CHIP 6.8MF	20%	4V
C688	1-126-603-11	ELECT CHIP 4.7MF	20%	35V
C690	1-135-181-21	TANTAL. CHIP 4.7MF	20%	6.3V
C691	1-163-091-00	CERAMIC CHIP 8PF	0.25PF	50V
C692	1-162-917-11	CERAMIC CHIP 15PF	5%	50V
C702	1-162-950-11	CERAMIC CHIP 56PF	5%	50V
C703	1-163-035-00	CERAMIC CHIP 0.047MF		50V
C704	1-163-035-00	CERAMIC CHIP 0.047MF		50V

When indicating parts by reference number, please include the board name.

VI-66

Ref.No	Part No.	Description		Remark
C705	1-163-035-00	CERAMIC CHIP 0.047MF		50V
C706	1-163-035-00	CERAMIC CHIP 0.047MF		50V
C707	1-163-035-00	CERAMIC CHIP 0.047MF		50V
C708	1-135-091-00	TANTAL. CHIP 1MF	20%	16V
C709	1-162-964-11	CERAMIC CHIP 0.001MF	10%	50V
C710	1-162-962-11	CERAMIC CHIP 470PF	10%	50V
C711	1-163-035-00	CERAMIC CHIP 0.047MF		50V
C712	1-163-038-00	CERAMIC CHIP 0.1MF		25V
C713	1-163-110-00	CERAMIC CHIP 51PF	5%	50V
C714	1-162-921-11	CERAMIC CHIP 33PF	5%	50V
C719	1-162-949-11	CERAMIC CHIP 47PF	5%	50V
C720	1-162-942-11	CERAMIC CHIP 12PF	5%	50V
C722	1-135-158-21	TANTAL. CHIP 15MF	20%	4V
C725	1-135-091-00	TANTAL. CHIP 1MF	20%	16V
C727	1-163-095-00	CERAMIC CHIP 12PF	5%	50V
C729	1-163-035-00	CERAMIC CHIP 0.047MF		50V
C730	1-162-974-11	CERAMIC CHIP 0.01MF		50V
C734	1-163-038-00	CERAMIC CHIP 0.1MF		25V

CONNECTOR

CN401	*1-565-882-11	PIN, CONNECTOR (PC BOARD)	10P
CN402	*1-566-761-11	PIN, CONNECTOR (PC BOARD)	6P
CN404	*1-566-765-11	PIN, CONNECTOR (PC BOARD)	10P
CN405	*1-566-766-11	PIN, CONNECTOR (PC BOARD)	11P
CN406	*1-565-543-31	PIN, CONNECTOR (PC BOARD)	4P
CN407	*1-565-543-11	PIN, CONNECTOR (PC BOARD)	4P
CN408	*1-565-541-11	PIN, CONNECTOR (PC BOARD)	2P
CN409	*1-566-184-11	PIN, CONNECTOR (PC BOARD)	5P
CN410	*1-565-542-11	PIN, CONNECTOR (PC BOARD)	3P
CN413	*1-565-541-11	PIN, CONNECTOR (PC BOARD)	2P
CN414	*1-565-541-11	PIN, CONNECTOR (PC BOARD)	2P

TRIMMER

CV401	1-141-331-11	CAP, VAR, TRIMMER (CHIP) (30PF)
CV402	1-141-331-11	CAP, VAR, TRIMMER (CHIP) (30PF)
CV601	1-141-311-11	CAP, VAR, TRIMMER (CHIP) (20PF)

DIODE

D251	8-719-941-86	DIODE DAN202U
D252	8-719-941-86	DIODE DAN202U
D253	8-719-941-86	DIODE DAN202U
D254	8-719-941-09	DIODE DAP202U
D256	8-719-941-86	DIODE DAN202U
D257	8-719-941-86	DIODE DAN202U
D258	8-719-941-86	DIODE DAN202U
D259	8-719-941-86	DIODE DAN202U
D260	8-719-941-86	DIODE DAN202U
D261	8-719-941-86	DIODE DAN202U
D263	8-719-941-86	DIODE DAN202U
D264	8-719-941-86	DIODE DAN202U
D266	8-719-941-86	DIODE DAN202U
D267	8-719-106-43	DIODE RD9.1M-B1
D401	8-719-941-86	DIODE DAN202U
D402	8-719-941-86	DIODE DAN202U
D404	8-719-941-86	DIODE DAN202U
D405	8-719-941-86	DIODE DAN202U
D407	8-719-941-86	DIODE DAN202U
D409	8-719-941-86	DIODE DAN202U
D411	8-713-949-48	DIODE 1T32-2
D413	8-719-941-86	DIODE DAN202U
D414	8-719-941-86	DIODE DAN202U
D418	8-719-800-76	DIODE 1SS226
D419	8-719-941-86	DIODE DAN202U
D420	8-719-941-86	DIODE DAN202U
D421	8-719-941-86	DIODE DAN202U
D422	8-719-941-86	DIODE DAN202U
D423	8-719-941-86	DIODE DAN202U
D424	8-719-941-86	DIODE DAN202U
D425	8-719-941-86	DIODE DAN202U
D609	8-719-941-86	DIODE DAN202U
D614	8-719-800-76	DIODE 1SS226
D616	8-719-404-40	DIODE MA121
D620	8-719-941-86	DIODE DAN202U

DELAY LINE

DL601	1-415-612-11	DELAY LINE, GLASS
DL603	1-415-652-11	DC (LC)

FILTER

FL401	1-236-370-11	LPF, DEMOD (Y)
FL402	1-236-371-11	LPF, REC (Y)
FL601	1-567-306-11	FILTER, CERAMIC
FL602	1-236-372-11	BPF (PB.C)
FL603	1-409-386-11	C E TRAP
FL604	1-236-373-11	BPF (REC.C)

IC

IC251	8-759-012-00	IC MC10H116M
IC401	8-759-710-09	IC NJM2233AM
IC403	8-759-710-29	IC NJM2235M
IC404	8-759-710-29	IC NJM2235M
IC405	8-759-009-22	IC MC14094BF
IC406	8-759-970-80	IC MB673198U
IC407	8-759-148-77	IC UPD6451GT-615
IC408	8-759-710-12	IC NJM2230M
IC409	8-752-031-01	IC CXA1047M
IC410	8-752-032-97	IC CXA1230AR
IC601	8-752-924-94	IC CX22021
IC602	8-752-003-22	IC CX20032
IC604	8-759-914-56	IC CX23054
IC605	8-759-710-07	IC NJM2234M
IC606	8-759-710-07	IC NJM2234M
IC609	8-759-925-60	IC BA401

When indicating parts by reference number, please include the board name.

Ref.No	Part No.	Description	Remark
		COIL	
L251	1-410-393-11	INDUCTOR CHIP 100UH	
L252	1-412-067-21	INDUCTOR CHIP 330UH	
L253	1-410-656-11	INDUCTOR CHIP 150UH	
L255	1-410-380-31	INDUCTOR CHIP 8.2UH	
L401	1-412-058-11	INDUCTOR CHIP 10UH	
L402	1-408-797-11	INDUCTOR CHIP 470UH	
L403	1-410-390-11	INDUCTOR CHIP 56UH	
L404	1-410-375-11	INDUCTOR CHIP 3.3UH	
L405	1-410-384-31	INDUCTOR CHIP 18UH	
L406	1-410-390-11	INDUCTOR CHIP 56UH	
L407	1-410-378-11	INDUCTOR CHIP 5.6UH	
L408	1-412-058-11	INDUCTOR CHIP 10UH	
L411	1-410-386-11	INDUCTOR CHIP 27UH	
L412	1-410-380-31	INDUCTOR CHIP 8.2UH	
L413	1-412-058-11	INDUCTOR CHIP 10UH	
L414	1-412-058-11	INDUCTOR CHIP 10UH	
L416	1-410-393-11	INDUCTOR CHIP 100UH	
L417	1-410-393-11	INDUCTOR CHIP 100UH	
L419	1-410-377-31	INDUCTOR CHIP 4.7UH	
L421	1-410-382-31	INDUCTOR CHIP 12UH	
L601	1-410-657-21	INDUCTOR CHIP 180UH	
L602	1-410-387-11	INDUCTOR CHIP 33UH	
L603	1-410-393-11	INDUCTOR CHIP 100UH	
L604	1-410-656-11	INDUCTOR CHIP 150UH	
L605	1-410-655-31	INDUCTOR CHIP 120UH	
L606	1-410-393-11	INDUCTOR CHIP 100UH	
L607	1-412-058-11	INDUCTOR CHIP 10UH	
L609	1-410-391-11	INDUCTOR CHIP 68UH	
L610	1-410-371-21	INDUCTOR CHIP 1.5UH	
L611	1-410-371-21	INDUCTOR CHIP 1.5UH	
L612	1-412-058-11	INDUCTOR CHIP 10UH	
L613	1-412-058-11	INDUCTOR CHIP 10UH	
L614	1-408-779-31	INDUCTOR CHIP 15UH	
L616	1-410-393-11	INDUCTOR CHIP 100UH	
L617	1-410-386-11	INDUCTOR CHIP 27UH	
L620	1-412-058-11	INDUCTOR CHIP 10UH	
L621	1-410-388-21	INDUCTOR CHIP 39UH	
L624	1-410-376-21	INDUCTOR CHIP 3.9UH	
L625	1-410-383-31	INDUCTOR CHIP 15UH	
		VARIABLE COIL	
LV601	1-459-547-11	COIL, VARIABLE 15UH	
		TRANSISTOR	
Q251	8-729-117-32	TRANSISTOR 2SC4177	
Q252	8-729-402-42	TRANSISTOR UN5213	
Q253	8-729-402-42	TRANSISTOR UN5213	
Q254	8-729-402-42	TRANSISTOR UN5213	
Q256	8-729-402-42	TRANSISTOR UN5213	
Q257	8-729-117-32	TRANSISTOR 2SC4177	
Q258	8-729-402-42	TRANSISTOR UN5213	
Q259	8-729-140-63	TRANSISTOR 2SA1611	
Q261	8-729-117-32	TRANSISTOR 2SC4177	
Q262	8-729-402-42	TRANSISTOR UN5213	
Q263	8-729-140-63	TRANSISTOR 2SA1611	
Q264	8-729-117-32	TRANSISTOR 2SC4177	
Q265	8-729-403-07	TRANSISTOR XN1213	
Q266	8-729-403-35	TRANSISTOR UN5113	
Q267	8-729-402-42	TRANSISTOR UN5213	
Q268	8-729-402-42	TRANSISTOR UN5213	
Q269	8-729-402-42	TRANSISTOR UN5213	
Q270	8-729-403-35	TRANSISTOR UN5113	
Q271	8-729-117-32	TRANSISTOR 2SC4177	
Q272	8-729-117-32	TRANSISTOR 2SC4177	
Q273	8-729-402-42	TRANSISTOR UN5213	
Q274	8-729-402-42	TRANSISTOR UN5213	
Q275	8-729-162-44	TRANSISTOR 2SB624-BV4	
Q276	8-729-402-42	TRANSISTOR UN5213	
Q277	8-729-117-32	TRANSISTOR 2SC4177	
Q278	8-729-140-63	TRANSISTOR 2SA1611	
Q279	8-729-403-35	TRANSISTOR UN5113	
Q280	8-729-921-58	TRANSISTOR DTA144TU	
Q281	8-729-403-07	TRANSISTOR XN1213	
Q282	8-729-402-42	TRANSISTOR UN5213	
Q402	8-729-905-57	TRANSISTOR DTA124EU	
Q403	8-729-905-57	TRANSISTOR DTA124EU	
Q404	8-729-402-42	TRANSISTOR UN5213	
Q406	8-729-402-42	TRANSISTOR UN5213	
Q407	8-729-117-32	TRANSISTOR 2SC4177	
Q408	8-729-402-42	TRANSISTOR UN5213	
Q409	8-729-402-42	TRANSISTOR UN5213	
Q410	8-729-117-32	TRANSISTOR 2SC4177	
Q411	8-729-403-35	TRANSISTOR UN5113	
Q412	8-729-202-38	TRANSISTOR 2SC3326N	
Q415	8-729-402-42	TRANSISTOR UN5213	
Q416	8-729-402-42	TRANSISTOR UN5213	
Q417	8-729-402-42	TRANSISTOR UN5213	
Q418	8-729-402-42	TRANSISTOR UN5213	
Q419	8-729-402-42	TRANSISTOR UN5213	
Q420	8-729-403-35	TRANSISTOR UN5113	
Q422	8-729-140-63	TRANSISTOR 2SA1611	
Q424	8-729-202-38	TRANSISTOR 2SC3326N	
Q426	8-729-202-38	TRANSISTOR 2SC3326N	
Q427	8-729-117-32	TRANSISTOR 2SC4177	
Q428	8-729-420-20	TRANSISTOR XN4312	
Q429	8-729-117-32	TRANSISTOR 2SC4177	
Q430	8-729-216-22	TRANSISTOR 2SA1162	
Q431	8-729-402-42	TRANSISTOR UN5213	
Q432	8-729-402-42	TRANSISTOR UN5213	
Q433	8-729-403-35	TRANSISTOR UN6113	
Q434	8-729-117-32	TRANSISTOR 2SC4177	
Q437	8-729-905-09	TRANSISTOR DTA144WU	
Q438	8-729-117-32	TRANSISTOR 2SC4177	
Q439	8-729-117-32	TRANSISTOR 2SC4177	

When indicating parts by reference number, please include the board name.

VI-66

Ref.No	Part No.	Description	Remark
Q440	8-729-117-32	TRANSISTOR 2SC4177	
Q441	8-729-117-32	TRANSISTOR 2SC4177	
Q442	8-729-117-32	TRANSISTOR 2SC4177	
Q443	8-729-905-45	TRANSISTOR DTA143EU	
Q444	8-729-140-63	TRANSISTOR 2SA1611	
Q445	8-729-117-32	TRANSISTOR 2SC4177	
Q446	8-729-117-32	TRANSISTOR 2SC4177	
Q447	8-729-117-32	TRANSISTOR 2SC4177	
Q448	8-729-162-44	TRANSISTOR 2SB624-BV4	
Q449	8-729-402-42	TRANSISTOR UN5213	
Q452	8-729-117-32	TRANSISTOR 2SC4177	
Q453	8-729-903-10	TRANSISTOR FMW1	
Q454	8-729-402-42	TRANSISTOR UN5213	
Q455	8-729-403-35	TRANSISTOR UN5113	
Q456	8-729-117-32	TRANSISTOR 2SC4177	
Q460	8-729-117-32	TRANSISTOR 2SC4177	
Q461	8-729-403-07	TRANSISTOR XN1213	
Q462	8-729-402-42	TRANSISTOR UN5213	
Q469	8-729-216-22	TRANSISTOR 2SA1162	
Q470	8-729-117-32	TRANSISTOR 2SC4177	
Q471	8-729-402-42	TRANSISTOR UN5213	
Q472	8-729-216-22	TRANSISTOR 2SA1162	
Q473	8-729-142-03	TRANSISTOR 2SC2223-F13	
Q474	8-729-102-07	TRANSISTOR 2SC2223-F13	
Q475	8-729-140-63	TRANSISTOR 2SA1611	
Q476	8-729-117-32	TRANSISTOR 2SC4177	
Q477	8-729-117-32	TRANSISTOR 2SC4177	
Q478	8-729-140-63	TRANSISTOR 2SA1611	
Q479	8-729-403-35	TRANSISTOR UN5113	
Q480	8-729-402-42	TRANSISTOR UN5213	
Q481	8-729-403-35	TRANSISTOR UN5113	
Q482	8-729-402-42	TRANSISTOR UN5213	
Q483	8-729-402-42	TRANSISTOR UN5213	
Q485	8-729-140-63	TRANSISTOR 2SA1611	
Q486	8-729-140-63	TRANSISTOR 2SA1611	
Q487	8-729-402-42	TRANSISTOR UN5213	
Q488	8-729-905-57	TRANSISTOR DTA124EU	
Q489	8-729-905-57	TRANSISTOR DTA124EU	
Q490	8-729-402-42	TRANSISTOR UN5213	
Q491	8-729-140-63	TRANSISTOR 2SA1611	
Q492	8-729-402-42	TRANSISTOR UN5213	
Q493	8-729-402-42	TRANSISTOR UN5213	
Q497	8-729-402-42	TRANSISTOR UN5213	
Q498	8-729-403-35	TRANSISTOR UN5113	
Q499	8-729-403-35	TRANSISTOR UN5113	
Q500	8-729-117-32	TRANSISTOR 2SC4177	
Q501	8-729-140-63	TRANSISTOR 2SA1611	
Q502	8-729-140-63	TRANSISTOR 2SA1611	
Q503	8-729-117-32	TRANSISTOR 2SC4177	
Q504	8-729-140-63	TRANSISTOR 2SA1611	
Q505	8-729-117-32	TRANSISTOR 2SC4177	
Q506	8-729-402-42	TRANSISTOR UN5213	
Q507	8-729-140-63	TRANSISTOR 2SA1611	
Q509	8-729-117-32	TRANSISTOR 2SC4177	
Q510	8-729-117-32	TRANSISTOR 2SC4177	
Q513	8-729-403-35	TRANSISTOR UN5113	
Q514	8-729-905-45	TRANSISTOR DTA143EU	
Q601	8-729-216-22	TRANSISTOR 2SA1162	
Q602	8-729-140-63	TRANSISTOR 2SA1611	
Q604	8-729-117-32	TRANSISTOR 2SC4177	
Q606	8-729-117-32	TRANSISTOR 2SC4177	
Q608	8-729-403-07	TRANSISTOR XN1213	
Q609	8-729-901-01	TRANSISTOR DTC144EK	
Q610	8-729-403-07	TRANSISTOR XN1213	
Q612	8-729-901-01	TRANSISTOR DTC144EK	
Q613	8-729-162-44	TRANSISTOR 2SB624-BV4	
Q614	8-729-403-35	TRANSISTOR UN5113	
Q615	8-729-905-45	TRANSISTOR DTA143EU	
Q616	8-729-140-63	TRANSISTOR 2SA1611	
Q617	8-729-117-32	TRANSISTOR 2SC4177	
Q618	8-729-117-32	TRANSISTOR 2SC4177	
Q630	8-729-901-01	TRANSISTOR DTC144EK	
Q631	8-729-271-22	TRANSISTOR 2SC2712-G	
Q632	8-729-271-22	TRANSISTOR 2SC2712-G	
Q633	8-729-901-06	TRANSISTOR DTA144EK	
Q634	8-729-403-07	TRANSISTOR XN1213	
Q636	8-729-403-06	TRANSISTOR XN1113	
Q638	8-729-901-06	TRANSISTOR DTA144EK	
Q639	8-729-901-01	TRANSISTOR DTC144EK	
Q640	8-729-901-06	TRANSISTOR DTA144EK	
Q642	8-729-901-01	TRANSISTOR DTC144EK	
Q645	8-729-117-32	TRANSISTOR 2SC4177	
Q646	8-729-903-10	TRANSISTOR FMW1	
Q647	8-729-216-22	TRANSISTOR 2SA1162	
Q649	8-729-117-32	TRANSISTOR 2SC4177	
Q650	8-729-271-22	TRANSISTOR 2SC2712-G	
Q651	8-729-901-06	TRANSISTOR DTA144EK	
Q652	8-729-271-22	TRANSISTOR 2SC2712-G	
Q654	8-729-117-32	TRANSISTOR 2SC4177	

RESISTOR

R052	1-216-810-11	METAL GLAZE	120	5%	1/16W
R053	1-216-864-11	METAL GLAZE	0	5%	1/16W
R054	1-216-813-11	METAL GLAZE	220	5%	1/16W
R055	1-216-821-11	METAL GLAZE	1K	5%	1/16W
R056	1-216-817-11	METAL GLAZE	470	5%	1/16W
R057	1-216-809-11	METAL GLAZE	100	5%	1/16W
R058	1-216-809-11	METAL GLAZE	100	5%	1/16W
R059	1-216-809-11	METAL GLAZE	100	5%	1/16W
R060	1-216-821-11	METAL GLAZE	1K	5%	1/16W
R061	1-216-825-11	METAL GLAZE	2.2K	5%	1/16W
R062	1-216-816-11	METAL GLAZE	390	5%	1/16W
R063	1-216-809-11	METAL GLAZE	100	5%	1/16W
R064	1-216-804-11	METAL GLAZE	39	5%	1/16W
R065	1-216-801-11	METAL GLAZE	22	5%	1/16W
R066	1-216-819-11	METAL GLAZE	680	5%	1/16W

When indicating parts by reference number, please include the board name.

Remark

Ref.No	Part No.	Description				Remark
R067	1-216-833-11	METAL GLAZE	10K	5%	1/16W	
R068	1-216-841-11	METAL GLAZE	47K	5%	1/16W	
R069	1-216-829-11	METAL GLAZE	4.7K	5%	1/16W	
R070	1-216-833-11	METAL GLAZE	10K	5%	1/16W	
R071	1-216-833-11	METAL GLAZE	10K	5%	1/16W	
R072	1-216-825-11	METAL GLAZE	2.2K	5%	1/16W	
R073	1-216-826-11	METAL GLAZE	2.7K	5%	1/16W	
R074	1-216-833-11	METAL GLAZE	10K	5%	1/16W	
R077	1-216-864-11	METAL GLAZE	0	5%	1/16W	
R101	1-216-835-11	METAL GLAZE	15K	5%	1/16W	
R103	1-216-864-11	METAL GLAZE	0	5%	1/16W	
R108	1-216-295-00	METAL GLAZE	0	5%	1/10W	
R110	1-216-295-00	METAL GLAZE	0	5%	1/10W	
R113	1-216-821-11	METAL GLAZE	1K	5%	1/16W	
R114	1-216-845-11	METAL GLAZE	100K	5%	1/16W	
R115	1-216-839-11	METAL GLAZE	33K	5%	1/16W	
R116	1-216-041-00	METAL GLAZE	470	5%	1/10W	
R117	1-216-073-00	METAL GLAZE	10K	5%	1/10W	
R118	1-216-073-00	METAL GLAZE	10K	5%	1/10W	
R122	1-216-835-11	METAL GLAZE	15K	5%	1/16W	
R123	1-216-841-11	METAL GLAZE	47K	5%	1/16W	
R124	1-216-826-11	METAL GLAZE	2.7K	5%	1/16W	
R125	1-216-833-11	METAL GLAZE	10K	5%	1/16W	
R126	1-216-833-11	METAL GLAZE	10K	5%	1/16W	
R127	1-216-833-11	METAL GLAZE	10K	5%	1/16W	
R129	1-216-864-11	METAL GLAZE	0	5%	1/16W	
R221	1-216-864-11	METAL GLAZE	0	5%	1/16W	
R251	1-216-821-11	METAL GLAZE	1K	5%	1/16W	
R252	1-216-821-11	METAL GLAZE	1K	5%	1/16W	
R253	1-216-821-11	METAL GLAZE	1K	5%	1/16W	
R258	1-216-864-11	METAL GLAZE	0	5%	1/16W	
R259	1-216-864-11	METAL GLAZE	0	5%	1/16W	
R260	1-216-833-11	METAL GLAZE	10K	5%	1/16W	
R261	1-216-833-11	METAL GLAZE	10K	5%	1/16W	
R262	1-216-833-11	METAL GLAZE	10K	5%	1/16W	
R263	1-216-864-11	METAL GLAZE	0	5%	1/16W	
R264	1-216-837-11	METAL GLAZE	22K	5%	1/16W	
R265	1-216-837-11	METAL GLAZE	22K	5%	1/16W	
R266	1-216-817-11	METAL GLAZE	470	5%	1/16W	
R267	1-216-845-11	METAL GLAZE	100K	5%	1/16W	
R268	1-216-833-11	METAL GLAZE	10K	5%	1/16W	
R269	1-216-833-11	METAL GLAZE	10K	5%	1/16W	
R270	1-216-831-11	METAL GLAZE	6.8K	5%	1/16W	
R271	1-216-821-11	METAL GLAZE	1K	5%	1/16W	
R272	1-216-818-11	METAL GLAZE	560	5%	1/16W	
R273	1-216-817-11	METAL GLAZE	470	5%	1/16W	
R274	1-216-808-11	METAL GLAZE	82	5%	1/16W	
R275	1-216-833-11	METAL GLAZE	10K	5%	1/16W	
R276	1-216-833-11	METAL GLAZE	10K	5%	1/16W	
R277	1-216-817-11	METAL GLAZE	470	5%	1/16W	
R278	1-216-817-11	METAL GLAZE	470	5%	1/16W	
R279	1-216-821-11	METAL GLAZE	1K	5%	1/16W	
R280	1-216-818-11	METAL GLAZE	560	5%	1/16W	
R282	1-216-817-11	METAL GLAZE	470	5%	1/16W	
R283	1-216-821-11	METAL GLAZE	1K	5%	1/16W	
R284	1-216-821-11	METAL GLAZE	1K	5%	1/16W	
R285	1-216-821-11	METAL GLAZE	1K	5%	1/16W	
R286	1-216-821-11	METAL GLAZE	1K	5%	1/16W	
R287	1-216-821-11	METAL GLAZE	1K	5%	1/16W	
R288	1-216-821-11	METAL GLAZE	1K	5%	1/16W	
R289	1-216-821-11	METAL GLAZE	1K	5%	1/16W	
R290	1-216-821-11	METAL GLAZE	1K	5%	1/16W	
R291	1-216-821-11	METAL GLAZE	1K	5%	1/16W	
R292	1-216-817-11	METAL GLAZE	470	5%	1/16W	
R293	1-216-817-11	METAL GLAZE	470	5%	1/16W	
R294	1-216-864-11	METAL GLAZE	0	5%	1/16W	
R295	1-216-845-11	METAL GLAZE	100K	5%	1/16W	
R296	1-216-841-11	METAL GLAZE	47K	5%	1/16W	
R297	1-216-845-11	METAL GLAZE	100K	5%	1/16W	
R298	1-216-841-11	METAL GLAZE	47K	5%	1/16W	
R299	1-216-841-11	METAL GLAZE	47K	5%	1/16W	
R301	1-216-821-11	METAL GLAZE	1K	5%	1/16W	
R302	1-216-821-11	METAL GLAZE	1K	5%	1/16W	
R303	1-216-821-11	METAL GLAZE	1K	5%	1/16W	
R304	1-216-821-11	METAL GLAZE	1K	5%	1/16W	
R305	1-216-821-11	METAL GLAZE	1K	5%	1/16W	
R306	1-216-828-11	METAL GLAZE	3.9K	5%	1/16W	
R307	1-216-825-11	METAL GLAZE	2.2K	5%	1/16W	
R308	1-216-809-11	METAL GLAZE	100	5%	1/16W	
R310	1-216-827-11	METAL GLAZE	3.3K	5%	1/16W	
R311	1-216-821-11	METAL GLAZE	1K	5%	1/16W	
R312	1-216-812-11	METAL GLAZE	180	5%	1/16W	
R313	1-216-813-11	METAL GLAZE	220	5%	1/16W	
R314	1-216-813-11	METAL GLAZE	220	5%	1/16W	
R316	1-216-821-11	METAL GLAZE	1K	5%	1/16W	
R317	1-216-809-11	METAL GLAZE	100	5%	1/16W	
R318	1-216-833-11	METAL GLAZE	10K	5%	1/16W	
R319	1-216-829-11	METAL GLAZE	4.7K	5%	1/16W	
R320	1-216-841-11	METAL GLAZE	47K	5%	1/16W	
R321	1-216-814-11	METAL GLAZE	270	5%	1/16W	
R322	1-216-828-11	METAL GLAZE	3.9K	5%	1/16W	
R323	1-216-857-11	METAL GLAZE	1M	5%	1/16W	
R324	1-216-841-11	METAL GLAZE	47K	5%	1/16W	
R326	1-216-839-11	METAL GLAZE	33K	5%	1/16W	
R327	1-216-835-11	METAL GLAZE	15K	5%	1/16W	
R328	1-216-818-11	METAL GLAZE	560	5%	1/16W	
R329	1-216-817-11	METAL GLAZE	470	5%	1/16W	
R330	1-216-817-11	METAL GLAZE	470	5%	1/16W	
R331	1-216-826-11	METAL GLAZE	2.7K	5%	1/16W	
R332	1-216-823-11	METAL GLAZE	1.5K	5%	1/16W	
R333	1-216-864-11	METAL GLAZE	0	5%	1/16W	
R334	1-216-809-11	METAL GLAZE	100	5%	1/16W	
R335	1-216-833-11	METAL GLAZE	10K	5%	1/16W	
R336	1-216-829-11	METAL GLAZE	4.7K	5%	1/16W	
R337	1-216-864-11	METAL GLAZE	0	5%	1/16W	
R338	1-216-848-11	METAL GLAZE	180K	5%	1/16W	

refer-
nclude

When indicating parts by reference number, please include the board name.

VI-66

Ref.No	Part No.	Description				Remark
R343	1-216-818-11	METAL GLAZE	560	5%	1/16W	
R357	1-216-817-11	METAL GLAZE	470	5%	1/16W	
R358	1-216-817-11	METAL GLAZE	470	5%	1/16W	
R359	1-216-837-11	METAL GLAZE	22K	5%	1/16W	
R360	1-216-821-11	METAL GLAZE	1K	5%	1/16W	
R361	1-216-039-00	METAL GLAZE	390	5%	1/10W	
R362	1-216-051-00	METAL GLAZE	1.2K	5%	1/10W	
R363	1-216-845-11	METAL GLAZE	100K	5%	1/16W	
R364	1-216-833-11	METAL GLAZE	10K	5%	1/16W	
R365	1-216-821-11	METAL GLAZE	1K	5%	1/16W	
R366	1-216-820-11	METAL GLAZE	820	5%	1/16W	
R367	1-216-816-11	METAL GLAZE	390	5%	1/16W	
R368	1-216-829-11	METAL GLAZE	4.7K	5%	1/16W	
R369	1-216-838-11	METAL GLAZE	27K	5%	1/16W	
R370	1-216-837-11	METAL GLAZE	22K	5%	1/16W	
R371	1-216-041-00	METAL GLAZE	470	5%	1/10W	
R372	1-216-043-00	METAL GLAZE	560	5%	1/10W	
R373	1-216-061-00	METAL GLAZE	3.3K	5%	1/10W	
R374	1-216-055-00	METAL GLAZE	1.8K	5%	1/10W	
R375	1-216-840-11	METAL GLAZE	39K	5%	1/16W	
R376	1-216-834-11	METAL GLAZE	12K	5%	1/16W	
R377	1-216-837-11	METAL GLAZE	22K	5%	1/16W	
R378	1-216-849-11	METAL GLAZE	220K	5%	1/16W	
R379	1-216-829-11	METAL GLAZE	4.7K	5%	1/16W	
R380	1-216-849-11	METAL GLAZE	220K	5%	1/16W	
R381	1-216-837-11	METAL GLAZE	22K	5%	1/16W	
R382	1-216-835-11	METAL GLAZE	15K	5%	1/16W	
R386	1-216-833-11	METAL GLAZE	10K	5%	1/16W	
R388	1-216-864-11	METAL GLAZE	0	5%	1/16W	
R390	1-216-809-11	METAL GLAZE	100	5%	1/16W	
R391	1-216-826-11	METAL GLAZE	2.7K	5%	1/16W	
R392	1-216-813-11	METAL GLAZE	220	5%	1/16W	
R393	1-216-819-11	METAL GLAZE	680	5%	1/16W	
R394	1-216-823-11	METAL GLAZE	1.5K	5%	1/16W	
R395	1-216-826-11	METAL GLAZE	2.7K	5%	1/16W	
R396	1-216-821-11	METAL GLAZE	1K	5%	1/16W	
R397	1-216-822-11	METAL GLAZE	1.2K	5%	1/16W	
R398	1-216-821-11	METAL GLAZE	1K	5%	1/16W	
R400	1-216-833-11	METAL GLAZE	10K	5%	1/16W	
R401	1-216-833-11	METAL GLAZE	10K	5%	1/16W	
R402	1-216-833-11	METAL GLAZE	10K	5%	1/16W	
R403	1-216-821-11	METAL GLAZE	1K	5%	1/16W	
R404	1-216-827-11	METAL GLAZE	3.3K	5%	1/16W	
R405	1-216-841-11	METAL GLAZE	47K	5%	1/16W	
R406	1-216-837-11	METAL GLAZE	22K	5%	1/16W	
R407	1-216-837-11	METAL GLAZE	22K	5%	1/16W	
R408	1-216-828-11	METAL GLAZE	3.9K	5%	1/16W	
R409	1-216-827-11	METAL GLAZE	3.3K	5%	1/16W	
R410	1-216-838-11	METAL GLAZE	27K	5%	1/16W	
R411	1-216-837-11	METAL GLAZE	22K	5%	1/16W	
R412	1-216-838-11	METAL GLAZE	27K	5%	1/16W	
R413	1-216-837-11	METAL GLAZE	22K	5%	1/16W	
R414	1-216-821-11	METAL GLAZE	1K	5%	1/16W	
R415	1-216-837-11	METAL GLAZE	22K	5%	1/16W	
R416	1-216-838-11	METAL GLAZE	27K	5%	1/16W	
R417	1-216-845-11	METAL GLAZE	100K	5%	1/16W	
R418	1-216-833-11	METAL GLAZE	10K	5%	1/16W	
R419	1-216-824-11	METAL GLAZE	1.8K	5%	1/16W	
R420	1-216-842-11	METAL GLAZE	56K	5%	1/16W	
R421	1-216-833-11	METAL GLAZE	10K	5%	1/16W	
R422	1-216-833-11	METAL GLAZE	10K	5%	1/16W	
R423	1-216-830-11	METAL GLAZE	5.6K	5%	1/16W	
R424	1-216-829-11	METAL GLAZE	4.7K	5%	1/16W	
R425	1-216-838-11	METAL GLAZE	27K	5%	1/16W	
R426	1-216-845-11	METAL GLAZE	100K	5%	1/16W	
R427	1-216-833-11	METAL GLAZE	10K	5%	1/16W	
R428	1-216-839-11	METAL GLAZE	33K	5%	1/16W	
R429	1-216-845-11	METAL GLAZE	100K	5%	1/16W	
R430	1-216-845-11	METAL GLAZE	100K	5%	1/16W	
R431	1-216-833-11	METAL GLAZE	10K	5%	1/16W	
R432	1-216-833-11	METAL GLAZE	10K	5%	1/16W	
R433	1-216-833-11	METAL GLAZE	10K	5%	1/16W	
R434	1-216-833-11	METAL GLAZE	10K	5%	1/16W	
R435	1-216-825-11	METAL GLAZE	2.2K	5%	1/16W	
R436	1-216-839-11	METAL GLAZE	33K	5%	1/16W	
R437	1-216-851-11	METAL GLAZE	330K	5%	1/16W	
R438	1-216-841-11	METAL GLAZE	47K	5%	1/16W	
R439	1-216-841-11	METAL GLAZE	47K	5%	1/16W	
R440	1-216-845-11	METAL GLAZE	100K	5%	1/16W	
R441	1-216-833-11	METAL GLAZE	10K	5%	1/16W	
R442	1-216-818-11	METAL GLAZE	560	5%	1/16W	
R444	1-216-821-11	METAL GLAZE	1K	5%	1/16W	
R445	1-216-821-11	METAL GLAZE	1K	5%	1/16W	
R446	1-216-821-11	METAL GLAZE	1K	5%	1/16W	
R447	1-216-077-00	METAL GLAZE	15K	5%	1/10W	
R448	1-216-069-00	METAL GLAZE	6.8K	5%	1/10W	
R449	1-216-834-11	METAL GLAZE	12K	5%	1/16W	
R450	1-216-832-11	METAL GLAZE	8.2K	5%	1/16W	
R451	1-216-829-11	METAL GLAZE	4.7K	5%	1/16W	
R452	1-216-061-00	METAL GLAZE	3.3K	5%	1/10W	
R453	1-216-063-00	METAL GLAZE	3.9K	5%	1/10W	
R454	1-216-039-00	METAL GLAZE	390	5%	1/10W	
R455	1-216-848-11	METAL GLAZE	180K	5%	1/16W	
R456	1-216-061-00	METAL GLAZE	3.3K	5%	1/10W	
R457	1-216-065-00	METAL GLAZE	4.7K	5%	1/10W	
R458	1-216-847-11	METAL GLAZE	150K	5%	1/16W	
R459	1-216-833-11	METAL GLAZE	10K	5%	1/16W	
R460	1-216-848-11	METAL GLAZE	180K	5%	1/16W	
R461	1-216-817-11	METAL GLAZE	470	5%	1/16W	
R462	1-216-832-11	METAL GLAZE	8.2K	5%	1/16W	
R463	1-216-837-11	METAL GLAZE	22K	5%	1/16W	
R464	1-216-826-11	METAL GLAZE	2.7K	5%	1/16W	
R465	1-216-826-11	METAL GLAZE	2.7K	5%	1/16W	
R466	1-216-847-11	METAL GLAZE	150K	5%	1/16W	
R468	1-216-857-11	METAL GLAZE	1M	5%	1/16W	
R469	1-216-851-11	METAL GLAZE	330K	5%	1/16W	

Ref.No	Part
R471	1-216
R472	1-216
R473	1-216
R475	1-216
R476	1-216
R477	1-216
R478	1-216
R479	1-216
R480	1-216
R481	1-216
R482	1-216
R483	1-216
R484	1-216
R485	1-216
R486	1-216
R487	1-216
R488	1-216
R489	1-216
R490	1-216
R491	1-216
R492	1-216
R493	1-216
R494	1-216
R495	1-216
R496	1-216
R498	1-216
R499	1-216
R500	1-216
R501	1-216
R502	1-216
R503	1-216
R504	1-216
R505	1-216
R506	1-216
R507	1-216
R510	1-216
R512	1-216
R513	1-216
R514	1-216
R515	1-216
R516	1-216
R517	1-216
R518	1-216
R519	1-216
R520	1-216
R521	1-216
R522	1-216
R523	1-216
R525	1-216
R526	1-216
R527	1-216
R528	1-216
R529	1-216

When indicating parts by reference number, please include the board name.

Ref.No	Part No.	Description				Remark
R471	1-216-833-11	METAL GLAZE	10K	5%	1/16W	
R472	1-216-825-11	METAL GLAZE	2.2K	5%	1/16W	
R473	1-216-061-00	METAL GLAZE	3.3K	5%	1/10W	
R475	1-216-051-00	METAL GLAZE	1.2K	5%	1/10W	
R476	1-216-023-00	METAL GLAZE	82	5%	1/10W	
R477	1-216-039-00	METAL GLAZE	390	5%	1/10W	
R478	1-216-039-00	METAL GLAZE	390	5%	1/10W	
R479	1-216-836-11	METAL GLAZE	18K	5%	1/16W	
R480	1-216-855-11	METAL GLAZE	680K	5%	1/16W	
R481	1-216-857-11	METAL GLAZE	1M	5%	1/16W	
R482	1-216-821-11	METAL GLAZE	1K	5%	1/16W	
R483	1-216-821-11	METAL GLAZE	1K	5%	1/16W	
R484	1-216-816-11	METAL GLAZE	390	5%	1/16W	
R485	1-216-834-11	METAL GLAZE	12K	5%	1/16W	
R486	1-216-837-11	METAL GLAZE	22K	5%	1/16W	
R487	1-216-827-11	METAL GLAZE	3.3K	5%	1/16W	
R488	1-216-837-11	METAL GLAZE	22K	5%	1/16W	
R489	1-216-841-11	METAL GLAZE	47K	5%	1/16W	
R490	1-216-842-11	METAL GLAZE	56K	5%	1/16W	
R491	1-216-829-11	METAL GLAZE	4.7K	5%	1/16W	
R492	1-216-843-11	METAL GLAZE	68K	5%	1/16W	
R493	1-216-845-11	METAL GLAZE	100K	5%	1/16W	
R494	1-216-821-11	METAL GLAZE	1K	5%	1/16W	
R495	1-216-837-11	METAL GLAZE	22K	5%	1/16W	
R496	1-216-837-11	METAL GLAZE	22K	5%	1/16W	
R498	1-216-821-11	METAL GLAZE	1K	5%	1/16W	
R499	1-216-839-11	METAL GLAZE	33K	5%	1/16W	
R500	1-216-827-11	METAL GLAZE	3.3K	5%	1/16W	
R501	1-216-824-11	METAL GLAZE	1.8K	5%	1/16W	
R502	1-216-835-11	METAL GLAZE	15K	5%	1/16W	
R503	1-216-837-11	METAL GLAZE	22K	5%	1/16W	
R504	1-216-834-11	METAL GLAZE	12K	5%	1/16W	
R505	1-216-853-11	METAL GLAZE	470K	5%	1/16W	
R506	1-216-846-11	METAL GLAZE	120K	5%	1/16W	
R507	1-216-847-11	METAL GLAZE	150K	5%	1/16W	
R510	1-216-833-11	METAL GLAZE	10K	5%	1/16W	
R512	1-216-825-11	METAL GLAZE	2.2K	5%	1/16W	
R513	1-216-821-11	METAL GLAZE	1K	5%	1/16W	
R514	1-216-821-11	METAL GLAZE	1K	5%	1/16W	
R515	1-216-825-11	METAL GLAZE	2.2K	5%	1/16W	
R516	1-216-832-11	METAL GLAZE	8.2K	5%	1/16W	
R517	1-216-834-11	METAL GLAZE	12K	5%	1/16W	
R518	1-216-821-11	METAL GLAZE	1K	5%	1/16W	
R519	1-216-821-11	METAL GLAZE	1K	5%	1/16W	
R520	1-216-864-11	METAL GLAZE	0	5%	1/16W	
R521	1-216-813-11	METAL GLAZE	220	5%	1/16W	
R522	1-216-813-11	METAL GLAZE	220	5%	1/16W	
R523	1-216-813-11	METAL GLAZE	220	5%	1/16W	
R525	1-216-818-11	METAL GLAZE	560	5%	1/16W	
R526	1-216-825-11	METAL GLAZE	2.2K	5%	1/16W	
R527	1-216-832-11	METAL GLAZE	8.2K	5%	1/16W	
R528	1-216-834-11	METAL GLAZE	12K	5%	1/16W	
R529	1-216-817-11	METAL GLAZE	470	5%	1/16W	

Ref.No	Part No.	Description				Remark
R530	1-216-832-11	METAL GLAZE	8.2K	5%	1/16W	
R531	1-216-834-11	METAL GLAZE	12K	5%	1/16W	
R532	1-216-825-11	METAL GLAZE	2.2K	5%	1/16W	
R533	1-216-833-11	METAL GLAZE	10K	5%	1/16W	
R534	1-216-833-11	METAL GLAZE	10K	5%	1/16W	
R535	1-216-816-11	METAL GLAZE	390	5%	1/16W	
R536	1-216-811-11	METAL GLAZE	150	5%	1/16W	
R537	1-216-819-11	METAL GLAZE	680	5%	1/16W	
R538	1-216-818-11	METAL GLAZE	560	5%	1/16W	
R539	1-216-813-11	METAL GLAZE	220	5%	1/16W	
R540	1-216-817-11	METAL GLAZE	470	5%	1/16W	
R541	1-216-817-11	METAL GLAZE	470	5%	1/16W	
R542	1-216-827-11	METAL GLAZE	3.3K	5%	1/16W	
R543	1-216-841-11	METAL GLAZE	47K	5%	1/16W	
R544	1-216-824-11	METAL GLAZE	1.8K	5%	1/16W	
R554	1-216-837-11	METAL GLAZE	22K	5%	1/16W	
R555	1-216-837-11	METAL GLAZE	22K	5%	1/16W	
R556	1-216-817-11	METAL GLAZE	470	5%	1/16W	
R557	1-216-821-11	METAL GLAZE	1K	5%	1/16W	
R558	1-216-817-11	METAL GLAZE	470	5%	1/16W	
R559	1-216-817-11	METAL GLAZE	470	5%	1/16W	
R560	1-216-864-11	METAL GLAZE	0	5%	1/16W	
R561	1-216-817-11	METAL GLAZE	470	5%	1/16W	
R562	1-216-819-11	METAL GLAZE	680	5%	1/16W	
R563	1-216-817-11	METAL GLAZE	470	5%	1/16W	
R564	1-216-829-11	METAL GLAZE	4.7K	5%	1/16W	
R565	1-216-837-11	METAL GLAZE	22K	5%	1/16W	
R566	1-216-838-11	METAL GLAZE	27K	5%	1/16W	
R567	1-216-830-11	METAL GLAZE	5.6K	5%	1/16W	
R568	1-216-829-11	METAL GLAZE	4.7K	5%	1/16W	
R569	1-216-821-11	METAL GLAZE	1K	5%	1/16W	
R570	1-216-821-11	METAL GLAZE	1K	5%	1/16W	
R571	1-216-821-11	METAL GLAZE	1K	5%	1/16W	
R572	1-216-820-11	METAL GLAZE	820	5%	1/16W	
R579	1-216-835-11	METAL GLAZE	15K	5%	1/16W	
R581	1-216-833-11	METAL GLAZE	10K	5%	1/16W	
R582	1-216-825-11	METAL GLAZE	2.2K	5%	1/16W	
R583	1-216-829-11	METAL GLAZE	4.7K	5%	1/16W	
R584	1-216-825-11	METAL GLAZE	2.2K	5%	1/16W	
R585	1-216-837-11	METAL GLAZE	22K	5%	1/16W	
R586	1-216-837-11	METAL GLAZE	22K	5%	1/16W	
R587	1-216-839-11	METAL GLAZE	33K	5%	1/16W	
R588	1-216-864-11	METAL GLAZE	0	5%	1/16W	
R590	1-216-864-11	METAL GLAZE	0	5%	1/16W	
R592	1-216-841-11	METAL GLAZE	47K	5%	1/16W	
R593	1-216-841-11	METAL GLAZE	47K	5%	1/16W	
R594	1-216-841-11	METAL GLAZE	47K	5%	1/16W	
R595	1-216-841-11	METAL GLAZE	47K	5%	1/16W	
R596	1-216-841-11	METAL GLAZE	47K	5%	1/16W	
R597	1-216-841-11	METAL GLAZE	47K	5%	1/16W	
R601	1-216-063-00	METAL GLAZE	3.9K	5%	1/10W	
R602	1-216-825-11	METAL GLAZE	2.2K	5%	1/16W	
R603	1-216-818-11	METAL GLAZE	560	5%	1/16W	

When indicating parts by reference number, please include the board name.

VI-66

Ref.No	Part No.	Description				Remark
R604	1-216-829-11	METAL GLAZE	4.7K	5%	1/16W	
R606	1-216-829-11	METAL GLAZE	4.7K	5%	1/16W	
R607	1-216-833-11	METAL GLAZE	10K	5%	1/16W	
R608	1-216-833-11	METAL GLAZE	10K	5%	1/16W	
R609	1-216-817-11	METAL GLAZE	470	5%	1/16W	
R610	1-216-830-11	METAL GLAZE	5.6K	5%	1/16W	
R611	1-216-837-11	METAL GLAZE	22K	5%	1/16W	
R612	1-216-041-00	METAL GLAZE	470	5%	1/10W	
R613	1-216-833-11	METAL GLAZE	10K	5%	1/16W	
R614	1-216-826-11	METAL GLAZE	2.7K	5%	1/16W	
R615	1-216-822-11	METAL GLAZE	1.2K	5%	1/16W	
R616	1-216-828-11	METAL GLAZE	3.9K	5%	1/16W	
R617	1-216-826-11	METAL GLAZE	2.7K	5%	1/16W	
R618	1-216-841-11	METAL GLAZE	47K	5%	1/16W	
R619	1-216-841-11	METAL GLAZE	47K	5%	1/16W	
R620	1-216-833-11	METAL GLAZE	10K	5%	1/16W	
R621	1-216-828-11	METAL GLAZE	3.9K	5%	1/16W	
R622	1-216-097-00	METAL GLAZE	100K	5%	1/10W	
R623	1-216-837-11	METAL GLAZE	22K	5%	1/16W	
R624	1-216-829-11	METAL GLAZE	4.7K	5%	1/16W	
R625	1-216-823-11	METAL GLAZE	1.5K	5%	1/16W	
R626	1-216-827-11	METAL GLAZE	3.3K	5%	1/16W	
R627	1-216-864-11	METAL GLAZE	0	5%	1/16W	
R628	1-216-834-11	METAL GLAZE	12K	5%	1/16W	
R629	1-216-829-11	METAL GLAZE	4.7K	5%	1/16W	
R630	1-216-823-11	METAL GLAZE	1.5K	5%	1/16W	
R632	1-216-848-11	METAL GLAZE	180K	5%	1/16W	
R633	1-216-049-00	METAL GLAZE	1K	5%	1/10W	
R634	1-216-822-11	METAL GLAZE	1.2K	5%	1/16W	
R635	1-216-295-00	METAL GLAZE	0	5%	1/10W	
R637	1-216-841-11	METAL GLAZE	47K	5%	1/16W	
R638	1-216-039-00	METAL GLAZE	390	5%	1/10W	
R639	1-216-857-11	METAL GLAZE	1M	5%	1/16W	
R640	1-216-115-00	METAL GLAZE	560K	5%	1/10W	
R641	1-216-841-11	METAL GLAZE	47K	5%	1/16W	
R643	1-216-295-00	METAL GLAZE	0	5%	1/10W	
R644	1-216-833-11	METAL GLAZE	10K	5%	1/16W	
R645	1-216-295-00	METAL GLAZE	0	5%	1/10W	
R647	1-216-833-11	METAL GLAZE	10K	5%	1/16W	
R666	1-216-833-11	METAL GLAZE	10K	5%	1/16W	
R667	1-216-821-11	METAL GLAZE	1K	5%	1/16W	
R670	1-216-295-00	METAL GLAZE	0	5%	1/10W	
R671	1-216-295-00	METAL GLAZE	0	5%	1/10W	
R672	1-216-864-11	METAL GLAZE	0	5%	1/16W	
R673	1-216-829-11	METAL GLAZE	4.7K	5%	1/16W	
R675	1-216-818-11	METAL GLAZE	560	5%	1/16W	
R676	1-216-819-11	METAL GLAZE	680	5%	1/16W	
R677	1-216-831-11	METAL GLAZE	6.8K	5%	1/16W	
R678	1-216-831-11	METAL GLAZE	6.8K	5%	1/16W	
R679	1-216-055-00	METAL GLAZE	1.8K	5%	1/10W	
R680	1-216-840-11	METAL GLAZE	39K	5%	1/16W	
R681	1-216-840-11	METAL GLAZE	39K	5%	1/16W	
R682	1-216-055-00	METAL GLAZE	1.8K	5%	1/10W	

Ref.No	Part No.	Description				Remark
R686	1-216-833-11	METAL GLAZE	10K	5%	1/16W	
R688	1-216-833-11	METAL GLAZE	10K	5%	1/16W	
R691	1-216-809-11	METAL GLAZE	100	5%	1/16W	
R692	1-216-019-00	METAL GLAZE	56	5%	1/10W	
R693	1-216-029-00	METAL GLAZE	150	5%	1/10W	
R694	1-216-097-00	METAL GLAZE	100K	5%	1/10W	
R695	1-216-834-11	METAL GLAZE	12K	5%	1/16W	
R696	1-216-833-11	METAL GLAZE	10K	5%	1/16W	
R697	1-216-821-11	METAL GLAZE	1K	5%	1/16W	
R698	1-216-814-11	METAL GLAZE	270	5%	1/16W	
R699	1-216-035-00	METAL GLAZE	270	5%	1/10W	
R700	1-216-043-00	METAL GLAZE	560	5%	1/10W	
R701	1-216-043-00	METAL GLAZE	560	5%	1/10W	
R702	1-216-059-00	METAL GLAZE	2.7K	5%	1/10W	
R705	1-216-055-00	METAL GLAZE	1.8K	5%	1/10W	
R706	1-216-089-00	METAL GLAZE	47K	5%	1/10W	
R707	1-216-837-11	METAL GLAZE	22K	5%	1/16W	
R708	1-216-833-11	METAL GLAZE	10K	5%	1/16W	
R709	1-216-834-11	METAL GLAZE	12K	5%	1/16W	
R710	1-216-833-11	METAL GLAZE	10K	5%	1/16W	
R711	1-216-864-11	METAL GLAZE	0	5%	1/16W	
R712	1-216-826-11	METAL GLAZE	2.7K	5%	1/16W	
R713	1-216-815-11	METAL GLAZE	330	5%	1/16W	
R714	1-216-815-11	METAL GLAZE	330	5%	1/16W	
R715	1-216-051-00	METAL GLAZE	1.2K	5%	1/10W	
R716	1-216-051-00	METAL GLAZE	1.2K	5%	1/10W	
R717	1-216-041-00	METAL GLAZE	470	5%	1/10W	
R744	1-216-063-00	METAL GLAZE	3.9K	5%	1/10W	
R745	1-216-071-00	METAL GLAZE	8.2K	5%	1/10W	
R746	1-216-838-11	METAL GLAZE	27K	5%	1/16W	
R747	1-216-817-11	METAL GLAZE	470	5%	1/16W	
R748	1-216-837-11	METAL GLAZE	22K	5%	1/16W	
R749	1-216-815-11	METAL GLAZE	330	5%	1/16W	
R750	1-216-821-11	METAL GLAZE	1K	5%	1/16W	
R751	1-216-039-00	METAL GLAZE	390	5%	1/10W	
R752	1-216-821-11	METAL GLAZE	1K	5%	1/16W	
R753	1-216-041-00	METAL GLAZE	470	5%	1/10W	
R754	1-216-031-00	METAL GLAZE	180	5%	1/10W	
R755	1-216-825-11	METAL GLAZE	2.2K	5%	1/16W	
R756	1-216-822-11	METAL GLAZE	1.2K	5%	1/16W	
R757	1-216-843-11	METAL GLAZE	68K	5%	1/16W	
R758	1-216-826-11	METAL GLAZE	2.7K	5%	1/16W	
R759	1-216-823-11	METAL GLAZE	1.5K	5%	1/16W	
R760	1-216-824-11	METAL GLAZE	1.8K	5%	1/16W	
R761	1-216-833-11	METAL GLAZE	10K	5%	1/16W	
R762	1-216-821-11	METAL GLAZE	1K	5%	1/16W	
R763	1-216-041-00	METAL GLAZE	470	5%	1/10W	
R765	1-216-821-11	METAL GLAZE	1K	5%	1/16W	
R770	1-216-864-11	METAL GLAZE	0	5%	1/16W	
R771	1-216-821-11	METAL GLAZE	1K	5%	1/16W	
R772	1-216-821-11	METAL GLAZE	1K	5%	1/16W	
R774	1-216-864-11	METAL GLAZE	0	5%	1/16W	
R776	1-216-821-11	METAL GLAZE	1K	5%	1/16W	

When indicating parts by reference number, please include the board name.

Ref.No	Part No.	Description				Remark
R777	1-216-071-00	METAL GLAZE	8.2K	5%	1/10W	
R778	1-216-295-00	METAL GLAZE	0	5%	1/10W	
R780	1-216-864-11	METAL GLAZE	0	5%	1/16W	
R781	1-216-864-11	METAL GLAZE	0	5%	1/16W	
R782	1-216-295-00	METAL GLAZE	0	5%	1/10W	
R783	1-216-295-00	METAL GLAZE	0	5%	1/10W	
R787	1-216-051-00	METAL GLAZE	1.2K	5%	1/10W	
R789	1-216-819-11	METAL GLAZE	680	5%	1/16W	
R790	1-216-819-11	METAL GLAZE	680	5%	1/16W	
R791	1-216-049-00	METAL GLAZE	1K	5%	1/10W	
R795	1-216-053-00	METAL GLAZE	1.5K	5%	1/10W	
R796	1-216-832-11	METAL GLAZE	8.2K	5%	1/16W	
R797	1-216-049-00	METAL GLAZE	1K	5%	1/10W	
R798	1-216-051-00	METAL GLAZE	1.2K	5%	1/10W	
R799	1-216-837-11	METAL GLAZE	22K	5%	1/16W	

VARIABLE RESISTOR

RV401	1-230-867-11	RES, ADJ, METAL GLAZE	1K
RV404	1-230-868-11	RES, ADJ, METAL GLAZE	2.2K
RV405	1-230-867-11	RES, ADJ, METAL GLAZE	1K
RV406	1-230-868-11	RES, ADJ, METAL GLAZE	2.2K
RV407	1-230-870-11	RES, ADJ, METAL GLAZE	10K
RV408	1-230-870-11	RES, ADJ, METAL GLAZE	10K
RV409	1-230-870-11	RES, ADJ, METAL GLAZE	10K
RV410	1-230-869-11	RES, ADJ, METAL GLAZE	4.7K
RV416	1-230-870-11	RES, ADJ, METAL GLAZE	10K
RV417	1-230-874-11	RES, ADJ, METAL GLAZE	100K
RV601	1-230-871-11	RES, ADJ, METAL GLAZE	22K
RV602	1-230-871-11	RES, ADJ, METAL GLAZE	22K

TERMINAL PIN

TP401	*1-535-622-11	PIN, TERMINAL
TP402	*1-535-622-11	PIN, TERMINAL

BOARD

W403	1-629-777-11	FP-203 BOARD

CRYSTAL

X601	1-567-505-61	OSCILLATOR, CRYSTAL (3.58MHz)

****

	*A-7061-979-A	PC-35 BOARD, COMPLETE (Ref.No 6,000 Series)
		**********
	*3-742-708-01	COVER, LPF SHIELD
	*3-742-754-01	COVER (B), LPF SHIELD
	*3-742-760-01	PLATE (A), SHIELD, LPF
	*3-742-818-01	PLATE, SHIELD, PC

CAPACITOR

C301	1-163-038-00	CERAMIC CHIP	0.1MF	25V
C302	1-163-038-00	CERAMIC CHIP	0.1MF	25V
C303	1-163-038-00	CERAMIC CHIP	0.1MF	25V

Ref.No	Part No.	Description			Remark
C304	1-163-038-00	CERAMIC CHIP	0.1MF		25V
C311	1-124-967-11	ELECT	10MF	20%	10V
C312	1-126-100-11	ELECT	10MF	20%	6.3V
C313	1-164-005-11	CERAMIC CHIP	0.47MF		25V
C314	1-164-005-11	CERAMIC CHIP	0.47MF		25V
C315	1-163-809-11	CERAMIC CHIP	0.047MF	10%	25V
C316	1-163-038-00	CERAMIC CHIP	0.1MF		25V
C317	1-126-094-11	ELECT	4.7MF	20%	16V
C318	1-126-094-11	ELECT	4.7MF	20%	16V
C319	1-163-038-00	CERAMIC CHIP	0.1MF		25V
C320	1-124-566-11	ELECT	120MF	20%	6.3V
C321	1-163-989-11	CERAMIC CHIP	0.033MF	10%	25V
C322	1-163-038-00	CERAMIC CHIP	0.1MF		25V
C323	1-163-989-11	CERAMIC CHIP	0.033MF	10%	25V
C325	1-163-235-91	CERAMIC CHIP	22PF	5%	50V
C326	1-163-235-91	CERAMIC CHIP	22PF	5%	50V
C327	1-163-009-11	CERAMIC CHIP	0.001MF	10%	50V
C328	1-163-009-11	CERAMIC CHIP	0.001MF	10%	50V
C329	1-124-225-00	ELECT	100MF	20%	6.3V
C330	1-126-157-11	ELECT	10MF	20%	6.3V
C331	1-126-153-11	ELECT	22MF	20%	6.3V
C332	1-162-587-11	CERAMIC CHIP	0.039MF	10%	25V
C333	1-163-125-00	CERAMIC CHIP	220PF	5%	50V
C334	1-163-017-00	CERAMIC CHIP	0.0047MF	10%	50V
C335	1-163-088-00	CERAMIC CHIP	5PF	0.25PF	50V
C336	1-126-157-11	ELECT	10MF	20%	6.3V
C337	1-124-464-11	ELECT	0.22MF	20%	50V
C338	1-163-137-00	CERAMIC CHIP	680PF	5%	50V
C339	1-163-020-00	CERAMIC CHIP	0.0082MF	10%	50V
C341	1-126-153-11	ELECT	22MF	20%	6.3V
C342	1-124-257-00	ELECT	2.2MF	20%	35V
C343	1-124-225-00	ELECT	100MF	20%	6.3V
C345	1-126-157-11	ELECT	10MF	20%	6.3V
C346	1-126-153-11	ELECT	22MF	20%	6.3V
C347	1-162-587-11	CERAMIC CHIP	0.039MF	10%	25V
C348	1-163-125-00	CERAMIC CHIP	220PF	5%	50V
C349	1-163-088-00	CERAMIC CHIP	5PF	0.25PF	50V
C350	1-124-225-00	ELECT	100MF	20%	6.3V
C351	1-163-137-00	CERAMIC CHIP	680PF	5%	50V
C352	1-126-157-11	ELECT	10MF	20%	6.3V
C353	1-124-464-11	ELECT	0.22MF	20%	50V
C354	1-124-257-00	ELECT	2.2MF	20%	35V
C355	1-124-225-00	ELECT	100MF	20%	6.3V
C356	1-163-809-11	CERAMIC CHIP	0.047MF	10%	25V
C357	1-126-153-11	ELECT	22MF	20%	6.3V
C358	1-126-153-11	ELECT	22MF	20%	6.3V
C359	1-163-117-00	CERAMIC CHIP	100PF	5%	50V
C360	1-124-257-00	ELECT	2.2MF	20%	35V
C361	1-124-257-00	ELECT	2.2MF	20%	35V
C362	1-163-117-00	CERAMIC CHIP	100PF	5%	50V
C363	1-163-809-11	CERAMIC CHIP	0.047MF	10%	25V
C364	1-126-153-11	ELECT	22MF	20%	6.3V
C365	1-126-478-11	ELECT	33MF	20%	10V

When indicating parts by reference number, please include the board name.

Ref.No	Part No.	Description			Remark
R877	1-216-829-11	METAL GLAZE	4.7K	5%	1/16W
R878	1-216-809-11	METAL GLAZE	100	5%	1/16W
R885	1-216-839-11	METAL GLAZE	33K	5%	1/16W
R886	1-216-835-11	METAL GLAZE	15K	5%	1/16W
R887	1-216-818-11	METAL GLAZE	560	5%	1/16W
R888	1-216-816-11	METAL GLAZE	390	5%	1/16W
R889	1-216-817-11	METAL GLAZE	470	5%	1/16W
R890	1-216-821-11	METAL GLAZE	1K	5%	1/16W
R891	1-216-818-11	METAL GLAZE	560	5%	1/16W
R894	1-216-812-11	METAL GLAZE	180	5%	1/16W
R895	1-216-841-11	METAL GLAZE	47K	5%	1/16W
R896	1-216-833-11	METAL GLAZE	10K	5%	1/16W
R901	1-216-821-11	METAL GLAZE	1K	5%	1/16W
R902	1-216-821-11	METAL GLAZE	1K	5%	1/16W
R903	1-216-833-11	METAL GLAZE	10K	5%	1/16W
R904	1-216-837-11	METAL GLAZE	22K	5%	1/16W
R905	1-216-833-11	METAL GLAZE	10K	5%	1/16W
R906	1-216-828-11	METAL GLAZE	3.9K	5%	1/16W
R907	1-216-817-11	METAL GLAZE	470	5%	1/16W
R908	1-216-836-11	METAL GLAZE	18K	5%	1/16W
R909	1-216-833-11	METAL GLAZE	10K	5%	1/16W
R910	1-216-823-11	METAL GLAZE	1.5K	5%	1/16W
R911	1-216-809-11	METAL GLAZE	100	5%	1/16W
R912	1-216-296-00	METAL GLAZE	0	5%	1/8W
R913	1-216-809-11	METAL GLAZE	100	5%	1/16W
R914	1-216-826-11	METAL GLAZE	2.7K	5%	1/16W
R916	1-216-833-11	METAL GLAZE	10K	5%	1/16W
R917	1-216-833-11	METAL GLAZE	10K	5%	1/16W
R929	1-216-817-11	METAL GLAZE	470	5%	1/16W
R930	1-216-831-11	METAL GLAZE	6.8K	5%	1/16W
R931	1-216-827-11	METAL GLAZE	3.3K	5%	1/16W
R943	1-216-864-11	METAL GLAZE	0	5%	1/16W
R944	1-216-864-11	METAL GLAZE	0	5%	1/16W
R946	1-216-841-11	METAL GLAZE	47K	5%	1/16W
R947	1-216-829-11	METAL GLAZE	4.7K	5%	1/16W
R949	1-216-820-11	METAL GLAZE	820	5%	1/16W
R951	1-216-837-11	METAL GLAZE	22K	5%	1/16W
R952	1-216-837-11	METAL GLAZE	22K	5%	1/16W
R953	1-216-822-11	METAL GLAZE	1.2K	5%	1/16W
R954	1-216-811-11	METAL GLAZE	150	5%	1/16W
R955	1-216-822-11	METAL GLAZE	1.2K	5%	1/16W
R956	1-216-820-11	METAL GLAZE	820	5%	1/16W
R957	1-216-837-11	METAL GLAZE	22K	5%	1/16W
R958	1-216-837-11	METAL GLAZE	22K	5%	1/16W
R959	1-216-823-11	METAL GLAZE	1.5K	5%	1/16W
R960	1-216-823-11	METAL GLAZE	1.5K	5%	1/16W
R961	1-216-839-11	METAL GLAZE	33K	5%	1/16W
R962	1-216-836-11	METAL GLAZE	18K	5%	1/16W
R963	1-216-839-11	METAL GLAZE	33K	5%	1/16W
R964	1-216-831-11	METAL GLAZE	6.8K	5%	1/16W
R965	1-216-833-11	METAL GLAZE	10K	5%	1/16W
R966	1-216-833-11	METAL GLAZE	10K	5%	1/16W
R967	1-216-818-11	METAL GLAZE	560	5%	1/16W
R968	1-216-835-11	METAL GLAZE	15K	5%	1/16W
R969	1-216-837-11	METAL GLAZE	22K	5%	1/16W
R970	1-216-839-11	METAL GLAZE	33K	5%	1/16W
R971	1-216-841-11	METAL GLAZE	47K	5%	1/16W

VARIABLE RESISTOR

RV802	1-230-869-11	RES, ADJ, METAL GLAZE	4.7K
RV803	1-230-869-11	RES, ADJ, METAL GLAZE	4.7K
RV805	1-230-868-11	RES, ADJ, METAL GLAZE	2.2K
RV806	1-230-867-11	RES, ADJ, METAL GLAZE	1K

****

*A-7061-982-A PJ-22 BOARD, COMPLETE (Ref.No 5,000 Series)
****

CAPACITOR

C901	1-162-638-11	CERAMIC CHIP	1MF		16V
C903	1-126-094-11	ELECT	4.7MF	20%	16V
C904	1-126-094-11	ELECT	4.7MF	20%	16V
C905	1-163-035-00	CERAMIC CHIP	0.047MF		50V
C906	1-162-638-11	CERAMIC CHIP	1MF		16V
C907	1-164-232-11	CERAMIC CHIP	0.01MF	10%	50V
C908	1-126-153-11	ELECT	22MF	20%	6.3V
C909	1-126-094-11	ELECT	4.7MF	20%	16V
C910	1-126-094-11	ELECT	4.7MF	20%	16V
C912	1-124-229-00	ELECT	33MF	20%	6.3V
C913	1-124-229-00	ELECT	33MF	20%	6.3V
C914	1-124-576-11	ELECT	220MF	20%	4V
C915	1-126-157-11	ELECT	10MF	20%	6.3V
C916	1-124-576-11	ELECT	220MF	20%	4V
C917	1-126-157-11	ELECT	10MF	20%	6.3V
C918	1-126-094-11	ELECT	4.7MF	20%	16V
C919	1-163-035-00	CERAMIC CHIP	0.047MF		50V
C920	1-126-153-11	ELECT	22MF	20%	6.3V
C921	1-126-153-11	ELECT	22MF	20%	6.3V
C923	1-126-094-11	ELECT	4.7MF	20%	16V
C924	1-163-107-00	CERAMIC CHIP	39PF	5%	50V
C925	1-163-034-00	CERAMIC CHIP	0.033MF		50V
C926	1-126-153-11	ELECT	22MF	20%	6.3V
C927	1-163-035-00	CERAMIC CHIP	0.047MF		50V
C928	1-163-033-00	CERAMIC CHIP	0.022MF		50V
C929	1-163-035-00	CERAMIC CHIP	0.047MF		50V
C930	1-163-035-00	CERAMIC CHIP	0.047MF		50V
C931	1-163-035-00	CERAMIC CHIP	0.047MF		50V
C932	1-163-035-00	CERAMIC CHIP	0.047MF		50V
C933	1-163-035-00	CERAMIC CHIP	0.047MF		50V
C934	1-163-035-00	CERAMIC CHIP	0.047MF		50V
C935	1-164-232-11	CERAMIC CHIP	0.01MF	10%	50V
C936	1-124-229-00	ELECT	.33MF	20%	6.3V

CONNECTOR

CN901	*1-566-765-11	PIN, CONNECTOR (PC BOARD) 10P
CN902	*1-566-761-11	PIN, CONNECTOR (PC BOARD) 6P

When indicating parts by reference number, please include the board name.

PJ-22

Ref.No	Part No.	Description	Remark
CN903	1-566-760-11	PIN, CONNECTOR (PC BOARD) 5P	
CN904	*1-563-308-11	CONNECTOR, BOARD TO BOARD 4P	
CN905	*1-566-763-11	PIN, CONNECTOR (PC BOARD) 8P	
		DIODE	
D903	8-719-106-43	DIODE RD9.1M-B1	
D904	8-719-106-43	DIODE RD9.1M-B1	
D905	8-719-106-43	DIODE RD9.1M-B1	
D906	8-719-106-43	DIODE RD9.1M-B1	
D907	8-719-106-43	DIODE RD9.1M-B1	
D908	8-719-106-43	DIODE RD9.1M-B1	
D909	8-719-106-43	DIODE RD9.1M-B1	
D910	8-719-106-43	DIODE RD9.1M-B1	
D911	8-719-106-43	DIODE RD9.1M-B1	
D912	8-719-106-43	DIODE RD9.1M-B1	
D919	8-719-400-18	DIODE MA152WK	
D920	8-719-400-18	DIODE MA152WK	
D921	8-719-400-18	DIODE MA152WK	
D922	8-719-400-18	DIODE MA152WK	
D923	8-719-400-18	DIODE MA152WK	
D924	8-719-400-18	DIODE MA152WK	
		IC	
IC901	8-752-009-51	IC CX20095A	
IC902	8-759-710-09	IC NJM2233AM	
		JACK	
J901	1-566-850-31	CONNECTOR, (S) TERMINAL 4P (S VIDEO INPUT)	
J902	1-569-368-11	JACK, PIN 3P (AUDIO L/R, VIDEO INPUT)	
J903	1-566-850-31	CONNECTOR, (S) TERMINAL 4P (S VIDEO OUTPUT)	
J904	1-537-142-21	TERMINAL BOARD (AUDIO/RFU DC OUT/VIDEO OUTPUT)	
J905	1-568-956-31	JACK, PIN 2P (AUDIO L/R OUTPUT)	
		COIL	
L903	1-410-820-41	INDUCTOR 10UH	
L907	1-410-808-41	INDUCTOR 1UH	
L908	1-410-828-41	INDUCTOR 47UH	
		TRANSISTOR	
Q901	8-729-216-22	TRANSISTOR 2SA1162	
Q904	8-729-901-01	TRANSISTOR DTC144EK	
Q905	8-729-100-66	TRANSISTOR 2SC1623	
Q906	8-729-100-66	TRANSISTOR 2SC1623	
Q907	8-729-100-66	TRANSISTOR 2SC1623	
Q908	8-729-271-22	TRANSISTOR 2SC2712G	
Q909	8-729-100-66	TRANSISTOR 2SC1623	
Q910	8-729-162-44	TRANSISTOR 2SB624-BV4	
Q911	8-729-901-01	TRANSISTOR DTC144EK	
Q912	8-729-901-01	TRANSISTOR DTC144EK	
Q913	8-729-901-01	TRANSISTOR DTC144EK	
Q914	8-729-119-76	TRANSISTOR 2SB1175-HFE	
Q915	8-729-100-66	TRANSISTOR 2SC1623	
Q917	8-729-901-01	TRANSISTOR DTC144EK	
Q918	8-729-901-01	TRANSISTOR DTC144EK	
Q919	8-729-216-22	TRANSISTOR 2SA1162	
Q921	8-729-901-01	TRANSISTOR DTC144EK	
Q922	8-729-100-66	TRANSISTOR 2SC1623	
Q923	8-729-100-66	TRANSISTOR 2SC1623	
Q925	8-729-216-22	TRANSISTOR 2SA1162	
Q932	8-729-901-06	TRANSISTOR DTA144EK	
Q933	8-729-901-01	TRANSISTOR DTC144EK	
		RESISTOR	
R901	1-216-059-00	METAL GLAZE 2.7K 5% 1/10W	
R902	1-216-041-00	METAL GLAZE 470 5% 1/10W	
R903	1-216-059-00	METAL GLAZE 2.7K 5% 1/10W	
R904	1-216-041-00	METAL GLAZE 470 5% 1/10W	
R905	1-216-055-00	METAL GLAZE 1.8K 5% 1/10W	
R906	1-216-051-00	METAL GLAZE 1.2K 5% 1/10W	
R907	1-216-295-00	METAL GLAZE 0 5% 1/10W	
R908	1-216-071-00	METAL GLAZE 8.2K 5% 1/10W	
R909	1-216-053-00	METAL GLAZE 1.5K 5% 1/10W	
R910	1-216-015-00	METAL GLAZE 39 5% 1/10W	
R911	1-216-015-00	METAL GLAZE 39 5% 1/10W	
R912	1-216-015-00	METAL GLAZE 39 5% 1/10W	
R913	1-216-015-00	METAL GLAZE 39 5% 1/10W	
R914	1-216-021-00	METAL GLAZE 68 5% 1/10W	
R915	1-216-021-00	METAL GLAZE 68 5% 1/10W	
R916	1-216-021-00	METAL GLAZE 68 5% 1/10W	
R919	1-216-049-00	METAL GLAZE 1K 5% 1/10W	
R921	1-216-049-00	METAL GLAZE 1K 5% 1/10W	
R923	1-216-049-00	METAL GLAZE 1K 5% 1/10W	
R924	1-216-049-00	METAL GLAZE 1K 5% 1/10W	
R925	1-216-057-00	METAL GLAZE 2.2K 5% 1/10W	
R926	1-216-073-00	METAL GLAZE 10K 5% 1/10W	
R927	1-216-069-00	METAL GLAZE 6.8K 5% 1/10W	
R928	1-216-073-00	METAL GLAZE 10K 5% 1/10W	
R929	1-216-073-00	METAL GLAZE 10K 5% 1/10W	
R930	1-216-049-00	METAL GLAZE 1K 5% 1/10W	
R931	1-216-039-00	METAL GLAZE 390 5% 1/10W	
R932	1-216-049-00	METAL GLAZE 1K 5% 1/10W	
R933	1-216-039-00	METAL GLAZE 390 5% 1/10W	
R934	1-216-041-00	METAL GLAZE 470 5% 1/10W	
R935	1-216-033-00	METAL GLAZE 220 5% 1/10W	
R936	1-216-043-00	METAL GLAZE 560 5% 1/10W	
R937	1-216-033-00	METAL GLAZE 220 5% 1/10W	
R938	1-216-021-00	METAL GLAZE 68 5% 1/10W	
R939	1-216-037-00	METAL GLAZE 330 5% 1/10W	
R940	1-216-041-00	METAL GLAZE 470 5% 1/10W	
R941	1-216-051-00	METAL GLAZE 1.2K 5% 1/10W	
R942	1-216-051-00	METAL GLAZE 1.2K 5% 1/10W	
R943	1-216-081-00	METAL GLAZE 22K 5% 1/10W	

When indicating parts by ref
ence number, please inclu
the board name.

Ref.No	Part No.	Description			Remark
R944	1-216-075-00	METAL GLAZE	12K	5%	1/10W
R945	1-216-089-00	METAL GLAZE	47K	5%	1/10W
R946	1-216-055-00	METAL GLAZE	1.8K	5%	1/10W
R947	1-216-081-00	METAL GLAZE	22K	5%	1/10W
R948	1-216-081-00	METAL GLAZE	22K	5%	1/10W
R949	1-216-081-00	METAL GLAZE	22K	5%	1/10W
R950	1-216-073-00	METAL GLAZE	10K	5%	1/10W
R951	1-216-138-00	METAL GLAZE	3.3	5%	1/8W
R952	1-216-067-00	METAL GLAZE	5.6K	5%	1/10W
R953	1-216-047-00	METAL GLAZE	820	5%	1/10W
R954	1-216-079-00	METAL GLAZE	18K	5%	1/10W
R955	1-216-296-00	METAL GLAZE	0	5%	1/8W
R956	1-216-296-00	METAL GLAZE	0	5%	1/8W
R957	1-216-296-00	METAL GLAZE	0	5%	1/8W
R958	1-216-296-00	METAL GLAZE	0	5%	1/8W
R960	1-216-049-00	METAL GLAZE	1K	5%	1/10W
R961	1-216-049-00	METAL GLAZE	1K	5%	1/10W
R963	1-216-295-00	METAL GLAZE	0	5%	1/10W
R964	1-216-097-00	METAL GLAZE	100K	5%	1/10W
R965	1-216-073-00	METAL GLAZE	10K	5%	1/10W
R966	1-216-049-00	METAL GLAZE	1K	5%	1/10W
R968	1-216-025-00	METAL GLAZE	100	5%	1/10W
R972	1-216-295-00	METAL GLAZE	0	5%	1/10W

VARIABLE RESISTOR

RV901	1-230-868-11	RES, ADJ, METAL GLAZE 2.2K
RV902	1-230-868-11	RES, ADJ, METAL GLAZE 2.2K
RV903	1-230-866-11	RES, ADJ, METAL GLAZE 470

SWITCH

SW901	1-571-102-11	SWITCH, SLIDE (EJECT)
SW902	1-554-945-12	SWITCH, SLIDE (AUDIO Hi-Fi/DIGITAL/MONITOR MIX)

****

*A-7030-171-A AF-DM ASSY (DM-23 BOARD, COMPLETE)

****

(Ref.No 1,000 Series)

CAPACITOR

C550	1-162-974-11	CERAMIC CHIP 0.01MF		50V
C553	1-163-038-00	CERAMIC CHIP 0.1MF		25V
C554	1-124-778-00	ELECT CHIP 22MF	20%	6.3V
C555	1-164-161-11	CERAMIC CHIP 0.0022MF	10%	50V
C556	1-163-037-11	CERAMIC CHIP 0.022MF	10%	25V
C557	1-162-974-11	CERAMIC CHIP 0.01MF		50V
C558	1-163-037-11	CERAMIC CHIP 0.022MF	10%	25V
C559	1-124-779-00	ELECT CHIP 10MF	20%	16V
C560	1-163-038-00	CERAMIC CHIP 0.1MF		25V
C562	1-162-964-11	CERAMIC CHIP 0.001MF	10%	50V
C563	1-162-637-11	CERAMIC CHIP 0.47MF		16V
C565	1-163-075-00	CERAMIC CHIP 0.047MF	10%	25V
C566	1-164-156-11	CERAMIC CHIP 0.1MF		25V
C567	1-135-155-21	TANTAL. CHIP 4.7MF	20%	16V
C568	1-162-970-11	CERAMIC CHIP 0.01MF	10%	25V
C569	1-162-970-11	CERAMIC CHIP 0.01MF	10%	25V
C570	1-162-970-11	CERAMIC CHIP 0.01MF	10%	25V

CONNECTOR

CN550	1-506-467-11	PIN, CONNECTOR 2P
CN551	*1-565-542-11	PIN, CONNECTOR (PC BOARD) 3P
CN552	1-563-585-11	CONNECTOR, FLEXIBLE 8P
CN553	*1-565-541-11	PIN, CONNECTOR (PC BOARD) 2P
CN554	*1-565-541-11	PIN, CONNECTOR (PC BOARD) 2P

DIODE

D550	8-719-404-46	DIODE MA110

IC

IC551	8-759-100-94	IC UPC358G2
IC552	8-759-981-82	IC RC3414M
IC553	8-759-231-23	IC TK10500M
IC554	8-759-030-35	IC MPC1725M

COIL

L551	1-410-381-11	INDUCTOR CHIP 10UH

TRANSISTOR

Q550	8-729-402-84	TRANSISTOR XN4601
Q551	8-729-805-25	TRANSISTOR 2SB1121
Q552	8-729-905-35	TRANSISTOR 2SC4081-R
Q555	8-729-905-35	TRANSISTOR 2SC4081-R
Q556	8-729-905-23	TRANSISTOR 2SA1576-R
Q557	8-729-907-00	TRANSISTOR DTC114EU
Q561	8-729-901-03	TRANSISTOR DTC144WK
Q562	8-729-402-78	TRANSISTOR XN6401
Q563	8-729-402-78	TRANSISTOR XN6401
Q564	8-729-402-42	TRANSISTOR UN5213
Q568	8-729-402-84	TRANSISTOR XN4601

RESISTOR

R550	1-216-830-11	METAL GLAZE	5.6K	5%	1/16W
R551	1-216-830-11	METAL GLAZE	5.6K	5%	1/16W
R552	1-216-831-11	METAL GLAZE	6.8K	5%	1/16W
R553	1-216-840-11	METAL GLAZE	39K	5%	1/16W
R554	1-216-134-00	METAL GLAZE	2.2	5%	1/8W
R555	1-216-838-11	METAL GLAZE	27K	5%	1/16W
R556	1-216-838-11	METAL GLAZE	27K	5%	1/16W
R569	1-216-134-00	METAL GLAZE	2.2	5%	1/8W
R570	1-216-833-11	METAL GLAZE	10K	5%	1/16W
R571	1-216-821-11	METAL GLAZE	1K	5%	1/16W
R572	1-216-821-11	METAL GLAZE	1K	5%	1/16W
R573	1-216-843-11	METAL GLAZE	68K	5%	1/16W
R574	1-216-144-00	METAL GLAZE	5.6	5%	1/8W
R575	1-216-857-11	METAL GLAZE	1M	5%	1/16W
R576	1-216-847-11	METAL GLAZE	150K	5%	1/16W

When indicating parts by reference number, please include the board name.